THINKING ELECTRONIC INDUSTRIAL CO., LTD.

HEAD OFFICE: 12F, No.93, Dashun 1st Rd., Zuoying Dist., Kaohsiung, Taiwan
TEL: 886-7-5577660 FAX: 886-7-5570560

MANUFACTURING SITE

☐ KAOHSIUNG FACTORY 1:No. 51, Kaifa Rd., N.E.P.Z, Kaohsiung City 81170, Taiwan
TEL: 886-7-9616668 FAX: 886-7-9616698

☐ KAOHSIUNG FACTORY 2:No. 2-2, Xinjian S. Rd., N.E.P.Z., Kaohsiung City 81170, Taiwan
TEL: 886-7-9630001 FAX: 886-7-3635113

☑ CHANGZHOU FACTORY: No.6 Longmen Rd., Wujin High & New-Tech Industrial Development Zone, Changzhou, Jiangsu, China 213161
TEL:86-519-86578999 FAX:86-519-86558643

☐ DONG GUAN FACTORY: No.45, East Rd., Sha-Tao Dist., Chang-An Town, Dongguan City, Guangdong, China 523863
TEL:86-769-85542016 FAX:86-769-85546890

☐ YICHANG FACTORY: No. 283 Xiaoting Avenue, Xiaoting Dist., Yichang City 443007, Hubei, China
TEL:86-717-6510010 FAX:86-717-6511430

SPECIFICATION FOR APPROVAL

CUSTOMER	佳世達
CERTIFIED MODEL/TYPE	KMC3S075
PART NO.	KMC3S075RY(RoHS+HF)
APPLICATION	
CUSTOMER P/N	
ISSUE DATE	May.10.2019
REV. NO.	1.1
REV. DATE	May.31.2021

FOR CUSTOMER APPROVAL	CHECKED BY
	Haili Gong
	APPROVED BY
	Huaifang Zhang

REVISED RECORD SHEET

REV. NO	REV. DATE	REVISED CONTENT
1.1	May.31.2021	See Page 2: Before:C:0.28~0.8mm After:C:0.28~0.75mm

INDEX

	Page
Part Number Code	1
Structure and Dimensions	2
Electrical Characteristics	2
Reliability	3
Soldering Recommendation	4
Typical Time-to-Trip Curves at 23℃	5
Thermal Derating Curve	5
RoHS Compliant Declaration	6
Warehouse Storage Conditions of Products	6
Safety Approvals	7
Certificates	7
Packaging	8

Part Number Code

Example :

K	**MC**	**3**	**S**	**075**	**R**	**Y**
(1)	**(2)**	**(3)**	**(4)**	**(5)**	**(6)**	**(7)**

No.	Item	Digit	Specification
(1)	Product Type	K	Thinking Polymer PTC Resettable Fuse
(2)	Type Series	MC	SMD series
(3)	Size (EIA)	3	1206
(4)	Structure	S	S type
(5)	I hold	075	0.75A @ 23℃
(6)	Packaging	R	Taping & Reel
(7)	Optional Suffix	Y	RoHS+HF compliance

Structure and Dimensions

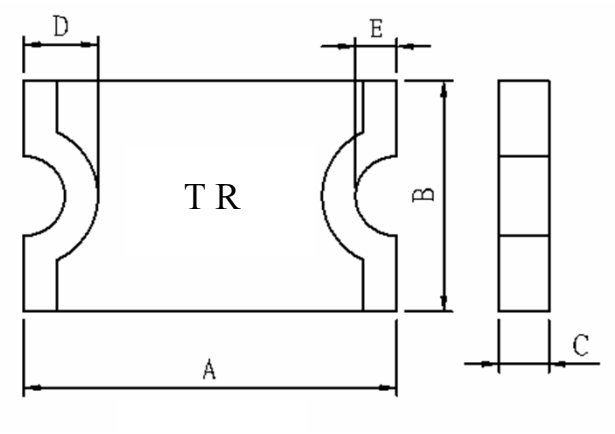

(Unit:mm)

Item	A	B	C	D	E
MIN.	3.00	1.50	0.28	0.125	0.08
MAX.	3.50	1.80	0.75	0.750	0.45

Electrical Characteristics (23℃)

Part No.	V max.	I max.	I hold @ 23℃	I trip @ 23℃	Pd (Max.)
	(V)	(A)	(A)	(A)	(W)
KMC3S075RY	8	100	0.75	1.50	0.60

Part No.	Max.time to trip		Resistance (Ω)		Operating / storage temperature
			Initial (Ri)	Post trip (R1)	
	(A)	(Sec.)	min.	max.	(℃)
KMC3S075RY	8.0	0.10	0.10	0.29	-40 ~ +85

Ihold=Hold current :maximum current device will pass without interruption at 23℃ still air unless otherwise specified.

Itrip=Trip current :minimum current that will switch the device from low resistance to high resistance at 23℃ still air unless otherwise specified.

Vmax=Maximum voltage device can withstand without damage at rated current.

Imax=Maximum current device can withstand without damage at rated voltage .

Pd=Power dissipated from device while the tripped state at 23℃ still air unless otherwise specified.

Rimin=Minimum resistance of device prior to tripping at 23℃ .

R1max=Maximum resistance of the device one hour after tripping at 23℃ .

Caution:Operation beyond the specified rating or improper use may result in damage and possible arcing and flame.

Reliability

Item	Standard	Test conditions/Methods	Specifications
Passive Aging	IEC60738-1	85±5℃, 1000±24hrs	±10% typical resistance change
Humidity Aging	Specification Standard	85±5℃, 80~85%RH, 100±5hrs	±5% typical resistance change
Rapid Change of Temperature	IEC60738-1	85±5/-40±5℃, 20 cycles Duration:30min	-33% typical resistance change
Overload Endurance	UL1434	Vmax,120% Imax ,50 cycles + Vmax,300% Itrip ,6000 cycles	No arcing or burring
Aging	UL1434	Vmax, Itrip≦ I≦Imax , 1000±24hrs	No arcing or burring
Solderability	IEC60068-2-58	245 ± 5 ℃ , 3 ± 0.3 sec	At least 95% of terminal electrode is covered by new solder

Soldering Recommendation

■ IR-Reflow Soldering Profile

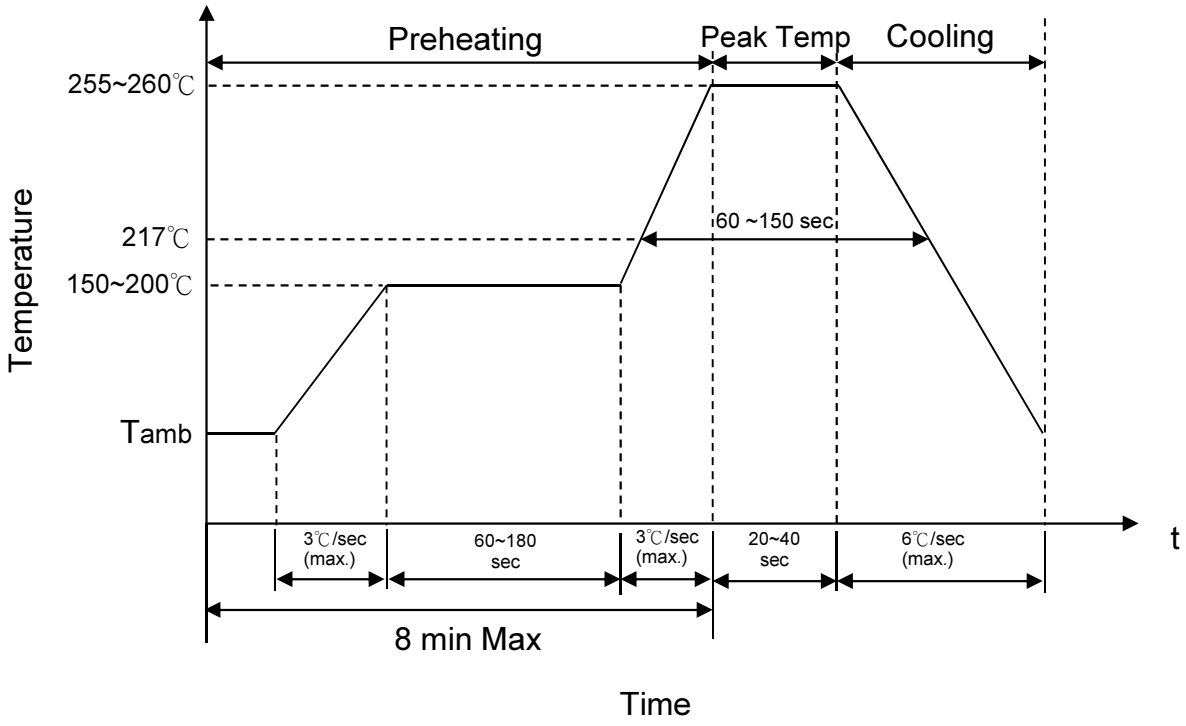

■ Recommended Reworking Conditions with Soldering Iron

Item	Conditions
Temperature of Soldering Iron-tip	360 ℃(max.)
Soldering Time	3 sec (max.)
Diameter of Soldering Iron-tip	ϕ 3 mm (max.)

■ Recommended Soldering Pad Dimensions (Nominal)

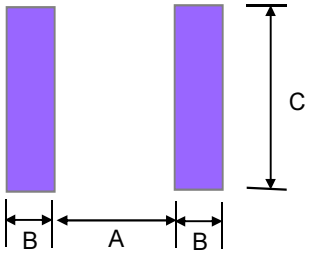

(Unit：mm)

SIZE	A	B	C
1206	2.00	1.00	1.90

Typical Time- to-Trip Curves at 23 ℃

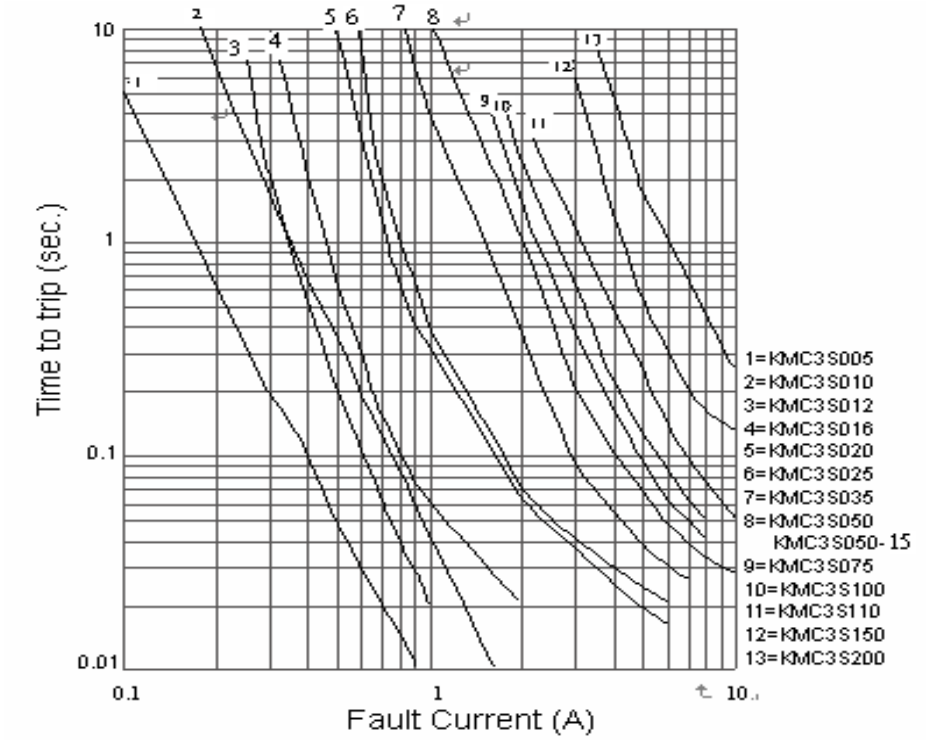

Thermal Derating Curve

Thermal derating curve for SMD 1206 series

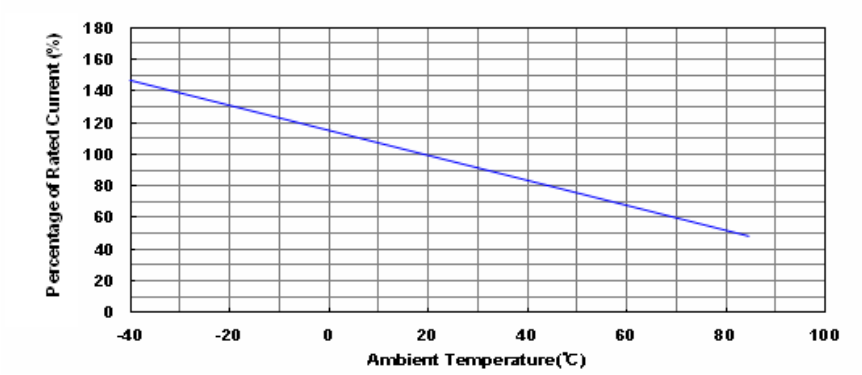

Model	Ambient Operation Temperature								
	-40℃	-20℃	0℃	23℃	40℃	50℃	60℃	70℃	85℃
KMC3S075	1.14	1.01	0.88	0.75	0.65	0.59	0.54	0.49	0.41

RoHS Compliant Declaration

We hereby declare that the components delivered to your company are compliant with RoHS directive 2015/863/EU.

Warehouse Storage Conditions of Products

(I) Storage Conditions :

1.Storage Temperature : -10℃~+40℃

2.Relative Humidity : ≦75%RH

3.Keep away from corrosive atmosphere and sunlight.

(II) Period of Storage : 1 year

Safety Approvals **(Certified Model/Type : KMC3S075)**

* UL 1434 / cUL recognized (File # E138827)

* TUV recognized (File # R50143386)

Certificates

(1) IATF 16949 certificate
(2) ISO 9001 certificate

Test Report

(1) RoHS test report
(2) Halogen-free test report

Packaging

■ Taping specification (1206 type)

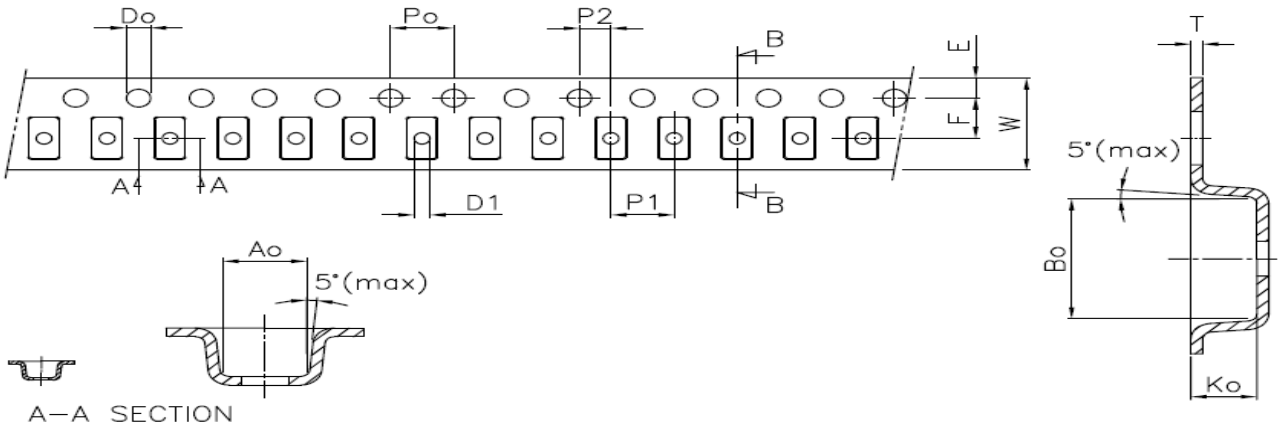

Unit : mm

Index / Type	A_0 ±0.1	B_0 ±0.1	K_0 ±0.05	P_0 ±0.1	P_1 ±0.1	P_2 ±0.1	T ±0.05	E ±0.1	F ±0.1	D_0 ±0.05	D_1 min	W ±0.3	$10P_0$ ±0.2
1206	1.85	3.45	0.85	4.00	4.00	2.00	0.23	1.75	3.50	1.55	1.00	8.00	40.00

■ Quantity (5000 pcs / reel)

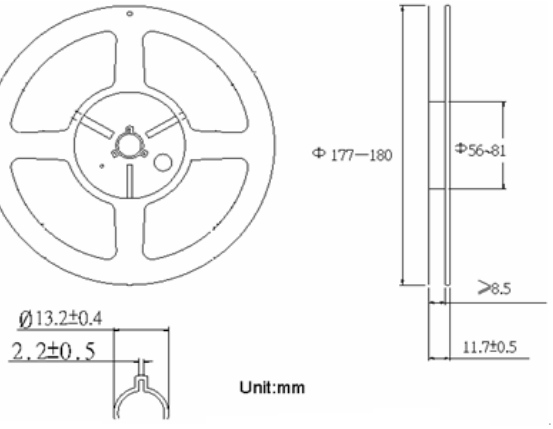

图1