

設計驗證
工程課
2025 -03- 31
發行

REV.	DATE	DESCRIPTION	BY	APVD
A	20250326	1.修改機種名稱RGP2461AMII-PW(AG)_C改成RGP2462AMII-PW(AG)_C 2.料號進階	COCO	

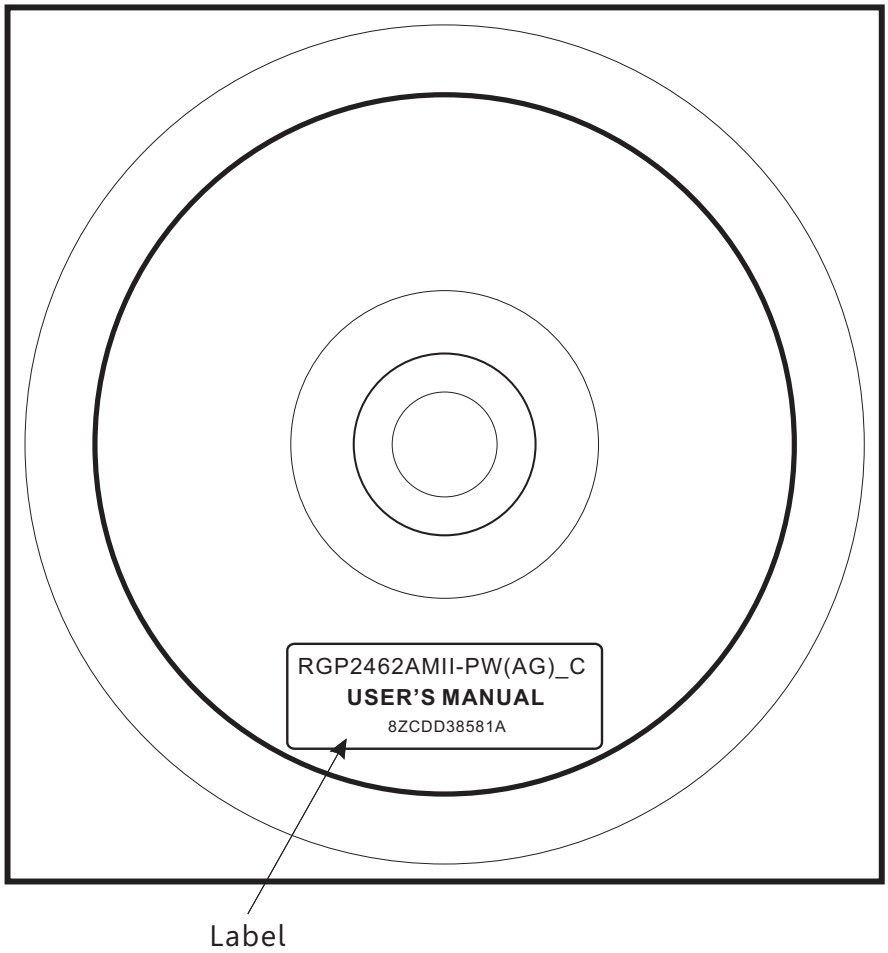

Notes:
1. Use 3ZCDDLCK020 blank CD-ROM.
2. CD Files made in DIVA.
3. Label spec:3MDL4XLB580 45mm*15mm, white. Use Ricoh #B110CR ribbon.
4. IQC inspection document: QWI-021

設計驗證
工程課
2025 -03- 31
發行
鈺達科技開發股份有限公司

SAFETY	PM / SALES	THIRD ANGLE PROJECTION	UNITS: mm	SCALE: 1/1	SHEET: 1/1	MODEL NO.: RGP2462AMII-PW(AG)_C
0328 1635	0328 1630		MATERIAL: SEE NOTES		TREATMENT: SEE NOTES	
PE	PCD	DSGD by COCO	2025/03/26	PART NAME: CD MANUAL		
0328 1700	0328 1915	APVD by	2025/03/31	PART NO.: 8ZCDD38581A		VER.0
		APVD NO.: (Z0545)	FILE NAME: RGP2462AMII-PW(AG)_C	DIVA Laboratories, Ltd.		

DIVA MEDICAL GRADE TOUCH DISPLAY





User Guide

23.8” LCD Touch Screen Monitor / 23.8” LCD Monitor

Model: RGP2462AMII-PW(AG)_C

Table of Contents

1. Introduction 4
   - 1.1 Monitor Description 4
   - 1.2 Box of Contents 4
   - 1.3 Product Overview 5
2. Important Information 9
   - 2.1 Safety Information 9
   - 2.2 Environmental Information 11
   - 2.3 Regulatory Information 12
   - 2.4 Equipment Symbols 13
3. Cleaning the Display 15
   - 3.1 Cleaning Instructions 15
   - 3.2 EMC Notice 16
4. Monitor Installation 23
   - 4.1 Installation Procedure 23
   - 4.2 Stand Removal & VESA Mount Installation 24
5. Daily Operation 27
   - 5.1 Main Power Switch 27
   - 5.2 Power/Status Indication 27
6. OSD Menu Operation 28
   - 6.1 On-Screen Display 28
   - 6.2 Menu Descriptions 28
   - 6.3 OSD Structure 28
   - 6.4 Main Menu 30
     - 6.4.1 Exit 30
     - 6.4.2 Auto Setup (Only Support Analog) 30
     - 6.4.3 Brightness 31
     - 6.4.4 Contrast 31
     - 6.4.5 Display (Only Support Analog) 31
     - 6.4.6 Color Mode 32
     - 6.4.7 Clock / Phase (Only Support Analog) 33
     - 6.4.8 Audio 34
     - 6.4.9 Management 35
     - 6.4.9.1 Scaling 35
     - 6.4.9.2 OSD Display 36
     - 6.4.9.3 Language 37
     - 6.4.9.4 Source 37
     - 6.4.9.5 Power Key Lock 38
     - 6.4.9.6 Recall 38
     - 6.4.10 Operating Hours 39
   - 6.5 Supported Video Modes 40
7. Technical Specifications 41
8. Outline Dimension 44

Revision History

The revision letter changes with related comments each time the document is updated.

REV.	Comment	DATE
A	Initial release of this document	2025/03/12
B	1. Change the model name from 2461 to 2462 2. Change P41、P46	2025/03/25

1. Introduction

1.1 Monitor Description

The equipment is applied for healthcare that is intended for general use in hospital environment for data collection and display for reference. It shall not be used with life support system or for medical diagnosis. It may provide simple image review software functionality for medical image processing and manipulation, such as grayscale window and level, zoom and pan, user delineated geometric measurements, compression, or user added image annotations. The device does not perform advanced image processing or complex quantitative functions. This does not include electronic transfer of medical image software functions.

Intended Use
This monitor is only used to display and review medical digital images and can be used as a part of the medical system for diagnosis. Complete diagnostic capabilities are provided by the medical system.

1.2 Box of Contents

- 23.8” LCD Touch Screen Monitor/ 23.8” LCD Monitor
- User Guide
- AC Power Cord
- VGA Cable
- DP Cable
- DVI Cable
- Audio Cable
- USB Cable (for touch version)
- Power Adapter (Delta 24V)

(Optional)

- RS232 Cable

1.3 Product Overview

Front View

The image below shows the front view of the display.

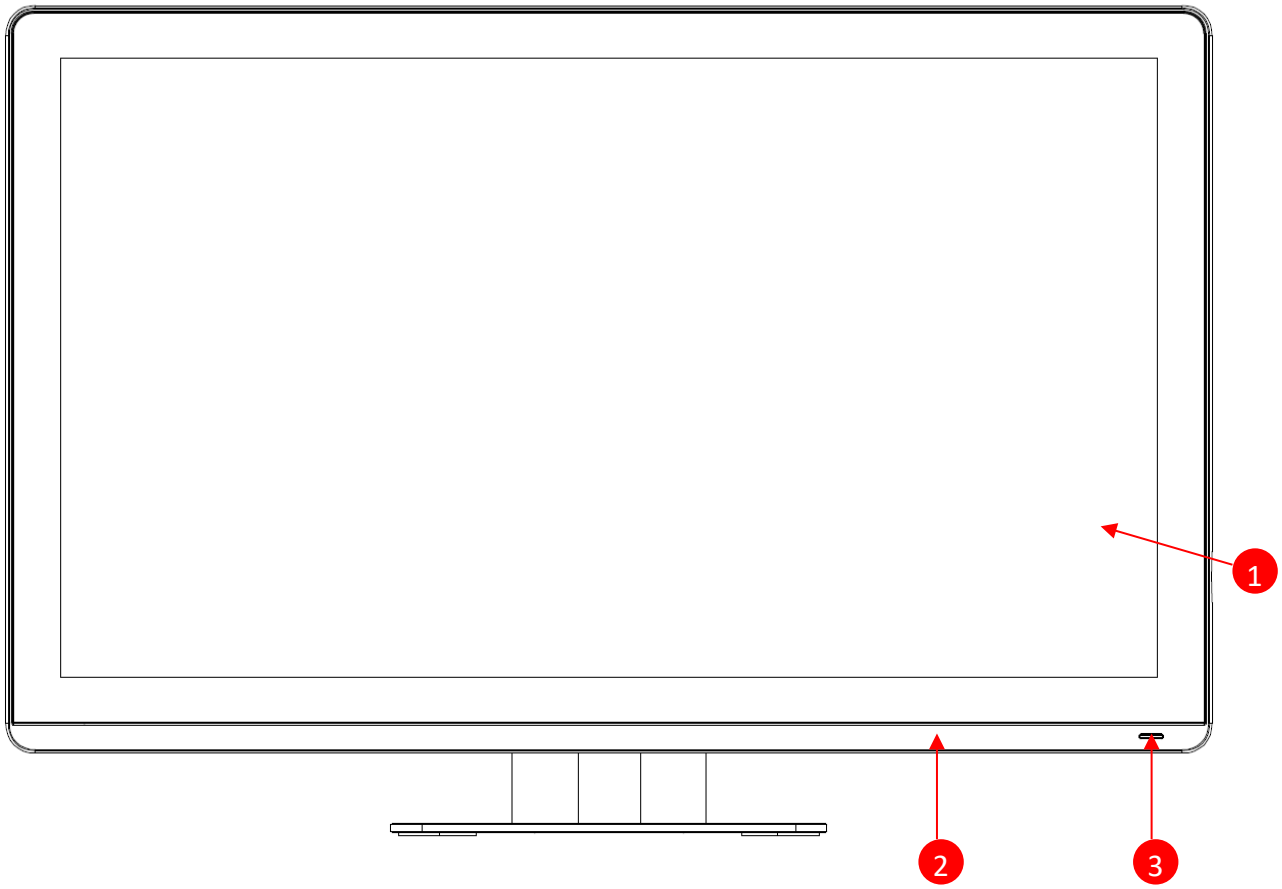

Image 1-1 Front view

1. P-CAP touch(for touch version)/ AG/ AR/ CLEAR cover glass
2. Bezel
3. LED

Side View

The image below shows the control keys located in the right bottom corner of the display.

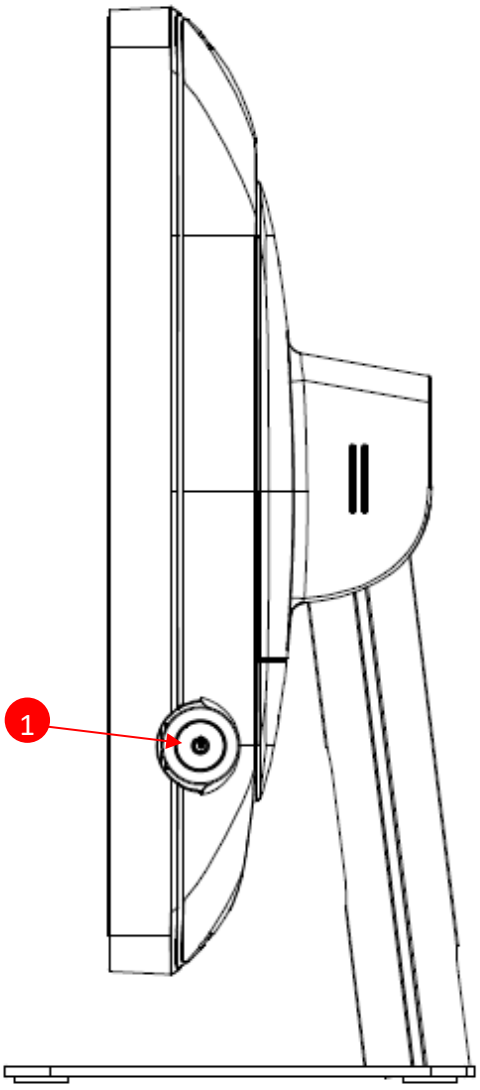

Image 1-2 Control Key

1. Menu / Enter key / Scrolling key

Rear View

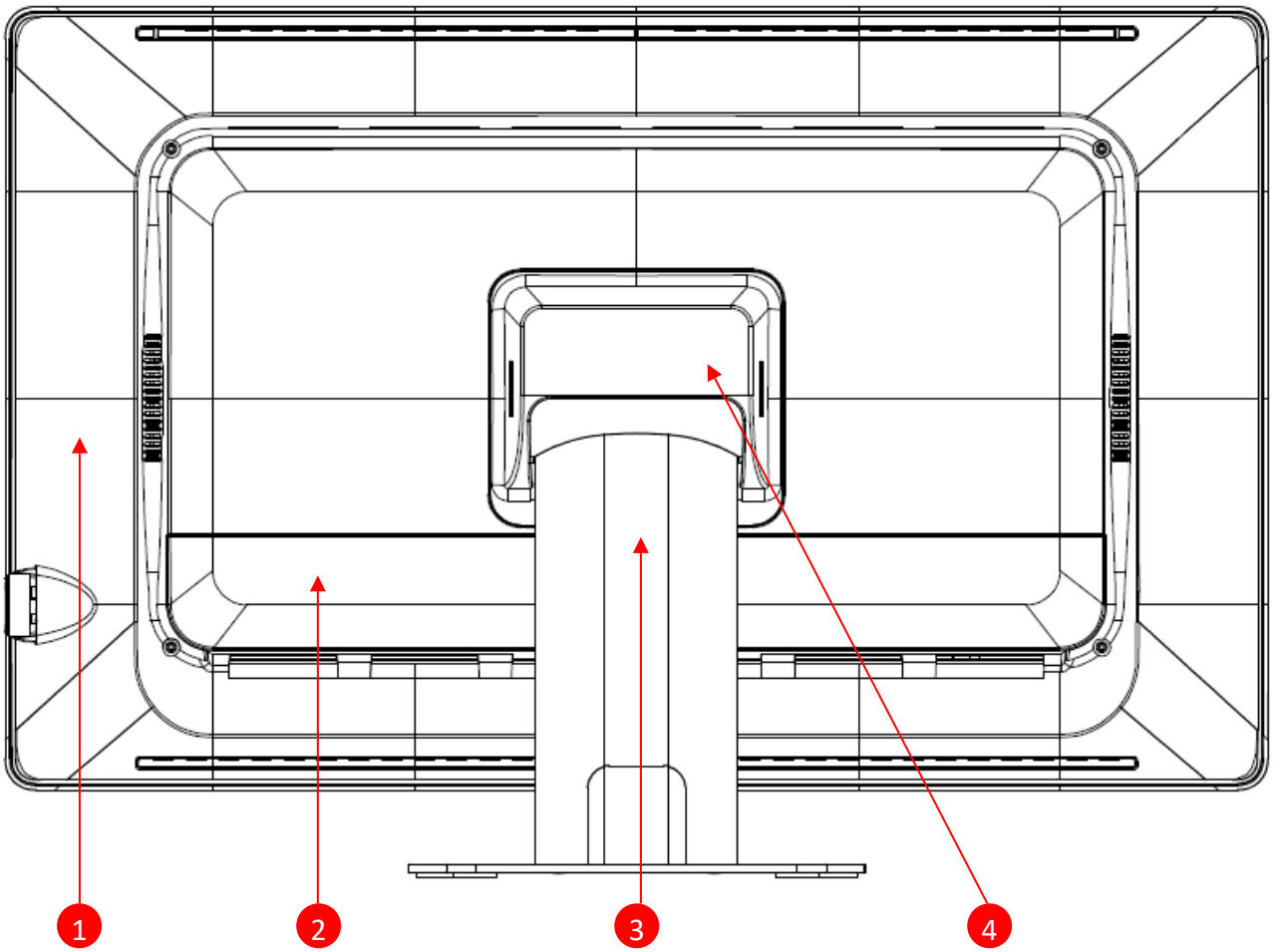

Image 1-3 Rear view

1. Rear cover
2. IO cover
3. Monitor stand
4. Hinge cover

Available Connections

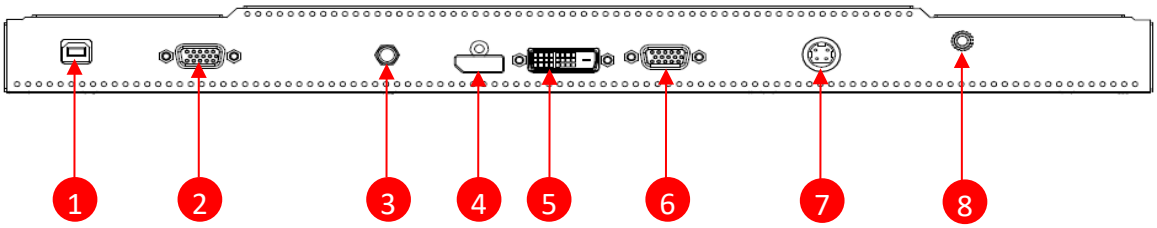

Image 1-4 Available connections (bottom view)

1. USB
2. RS232
3. Audio
4. Display Port
5. DVI
6. VGA
7. POWER
8. 

2. Important Information

2.1 Safety Information

General Recommendations

Read the safety and operating instructions before operating the device. Save the safety and operating instructions for future reference.

Adhere to all warnings on the device and in the operating instructions manual. Follow all instructions for operation and use.

Electrical Shock or Fire Hazard

To prevent an electrical shock or fire hazard, do not remove the cover.

No serviceable parts are inside. Refer servicing to qualified personnel. Do not expose this apparatus to rain or moisture.

Modifications to the Unit:

Do not modify this equipment without authorization of the manufacturer.

Degree of Safety (Flammable Anesthetic Mixture):

Equipment is not suitable for use in the presence of a flammable anesthetic mixture of air, oxygen, or nitrous oxide.

Non-Patient Care Equipment

- Equipment primarily for use in a health care facility. It is intended for use when contact with a patient is unlikely (no applied part).
- The equipment may not be used with life support equipment.
- The user should not touch the equipment, nor its signal input ports (SIP)/signal output ports (SOP) and the patient at the same time.

Mission Critical Applications

We strongly recommend for there to be a replacement monitor immediately available in mission critical applications.

Power Connection – Equipment with External Power Supply

- This equipment must be grounded.
- Power requirements: The equipment must be powered by external adapter.
- The equipment is intended for continuous operation.

Ergonomics

- Position your monitor no closer than 40 cm and no further away than 70 cm from your eyes. The optimal distance is 50cm.
- Use the preset Color Setting. Do not use primary color blue on a dark background, as it is difficult to see and may produce eye fatigue to insufficient contrast.
- Adjust the monitor height so that the top of the screen is at or slightly below eye level. Your eyes should look slightly downward when viewing the middle of the screen.

Power Cords

- Do not overload wall outlets and extension cords as this may result in fire or electric shock.
- Main leads protection (U.S.: Power cord): Power cords should be routed so that they are not walked upon or pinched by items placed upon or against them. Pay particular attention to cords at plugs and receptacles.
- The power supply cord should be replaced by the designated operator only at all time.
- Use a power cord that matches the voltage of the power outlet, which should be approved and in compliance with the safety standard of your particular country.
- Avoid placing the monitor near places that is hard to reach or difficult to disconnect the power supply cord.
- For ME EQUIPMENT provided with NEMA configuration non-locking plug types 120V/ 15 A, 125V/ 15A, 250V/ 20A, maximum 3 m long, "Hospital Grade" mains plug shall be provided and the POWER SUPPLY CORD shall be marked.

Grounding Reliability

Grounding reliability can only be achieved when the equipment is connected to an equivalent receptacle.

Liquids and Moisture

Never expose the monitor to liquids or moisture.
Never use the monitor near water - e.g. near a bathtub, washbasin, swimming pool, kitchen sink, laundry tub or in a wet basement.

Ventilation

Do not cover or block any ventilation openings in the cover of the set. When installing the device in a cupboard or another closed location, heed the necessary space between the set and the sides of the cupboard.

Installation

Place the device on a flat, solid, and stable surface that can support the weight of at least 3 devices. If you use an unstable cart or stand, the device may fall, causing serious injury to a child or adult, and serious damage to the device.

Accessory equipment connected to the analog and digital interfaces must be in compliance with the respective nationally harmonized IEC standards (i.e. IEC 60601-1 for medical equipment.) Furthermore all configurations shall comply with the system standard in IEC 60601-1. Anyone who connects additional equipment to the signal input part or signal output part is configuring a medical system, and is therefore, responsible that the system complies with the requirements of the system standard IEC 60601-1. The unit is for exclusive interconnection with IEC 60601-1 certified equipment in the patient environment and IEC 60XXX certified equipment outside of the patient environment.

Contraindications

This monitor is not intended to be used for direct diagnosis and therapeutic interventional Radiology for reference only. No part of this product may come in contact with a patient. Never touch the product and a patient at the same time. The equipment not suitable for use in the presence of a flammable anesthetic mixture with air or with oxygen or nitrous oxide; Not AP or APG Category. The monitor shall not be used in digital mammography and for medical equipment systems for MRI.

Personal Allergy History: Users should avoid use if they have an allergic reaction to any of the ingredients in this product.

2.2 Environmental Information

Disposal Information

Waste Electrical and Electronic Equipment



This symbol on the product indicates that under the European Directive 2012/19/EU, governing waste from electrical and electronic equipment, this product must not be disposed of with other municipal waste. Please dispose of your waste equipment by handing it over to a designated collection point for the recycling of waste electrical and electronic equipment. To prevent possible harm to the environment or human health from uncontrolled waste disposal, please separate these items from other types of waste and recycle them responsibly to promote the sustainable reuse of material resources.

For more information about recycling of this product, please contact your local city office or your municipal waste disposal service.

ROHS

EU Directive 2011/65/EC and 2015/863/EU

On the restriction of certain hazardous substances in electrical and electronic equipment.

This product is RoHS compliant.

2.3 Regulatory Information

FCC class B

This device complies with Part 15 of the FCC Rules. Operation is subject to the following two conditions:
(1) This device may not cause harmful interference, and (2) this device must accept any interference received, including interference that may cause undesired operation.

This device has been tested and found to comply with the limits for a Class B digital device, pursuant to Part 15 of the FCC Rules. These limits are designed to provide reasonable protection against harmful interference in a residential installation. This device generates uses and can radiate radio frequency energy and, if not installed and used in accordance with the instructions, may cause harmful interference to radio communications. However, there is no guarantee that interference will not occur in a particular installation. If this device does cause harmful interference to radio or television reception, which can be determined by turning the device off and on, the user is encouraged to try to correct the interference by one or more of the following measures:

- Reorient or relocate the receiving antenna.
- Increase the separation between the device and receiver.
- Connect the device to an outlet on a circuit different from that to which the receiver is connected.
- Consult the dealer or an experienced radio/TV technician for help.

Changes or modifications not expressly approved by the party responsible for compliance could void the user's authority to operate the equipment.

To assure continued FCC compliance, the user must use a grounded power supply cord and the provided shielded video interface cable with bonded ferrite cores. Also, any unauthorized changes or modifications to this monitor would void the user's authority to operate this device.

Canadian notice

This ISM device complies with Canadian ICES-003.

Cet appareil ISM est conforme à la norme NMB-003 du Canada.

2.4 Equipment Symbols

Electrical and electronic equipment symbols

	Indicates the device meets the requirements of the applicable EC directives. Indique que l'appareil satisfait aux exigences des directives CE en vigueur.
	Indicates compliance with Part 15 of the FCC rules Indique la conformité à la partie 15 des règles de la FCC.
	Indicates the device is approved according to the TUV regulations for Canada and US Indique que l'appareil est approuvé conformément à la réglementation TUV pour le Canada et les États-Unis.
	Indicates the USB connectors on the device Indique les connecteurs USB sur le périphérique.
	Indicates the Display Port connectors on the device. Indique les connecteurs du port d'affichage sur l'appareil.
	Indicates the legal manufacturer. Indique le fabricant légal.
	Indicates the manufacturing date. Indique la date de fabrication.
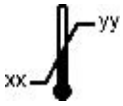	Temperature limit (for Transport/Storage) Limite de température (pour le transport / stockage)
	Storage humidity range(for Transport/Storage). Plage d'humidité de stockage (pour le transport / stockage)
	Atmospheric Pressure(for Transport/Storage). Pression atmosphérique (pour le transport / stockage)
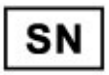	Indicates the device serial number Indique le numéro de série de l'appareil.
	Indicates the device part number or catalog number Indique le numéro de référence de l'appareil ou le numéro de catalogue.
	Warning: dangerous voltage AVERTISSEMENT : Tension dangereuse

	Caution ATTENTION
	Consult accompanying documents. Consultez les documents accompagnés.
	Indicates this device must not be thrown in the trash but must be recycled, according to the European WEEE (Waste Electrical and Electronic Equipment) directive. Indique que cet appareil ne doit pas être jeté à la poubelle mais doit être recyclé, conformément à la directive européenne DEEE (déchets d'équipements électriques et électroniques).
	Indicates Direct Current (DC) Indique le courant continu (DC).
	Indicates Alternating Current (AC) Indique le courant alternatif (AC).
	Stand-by or power indicator. Indicateur de veille ou d'alimentation.
	Power ON. Power connection to the mains. Allumer. Raccordement électrique au réseau.
	Power OFF Éteindre.
	Protective earth (ground) Protection par mise à la terre (masse).
	Equipotentiality. Connect device to a potential equalization conductor. Équipotentialité. Raccordez l'appareil à un conducteur de liaison équipotentielle.

3. Cleaning the Display

3.1 Cleaning Instructions

To clean the display

Cleaning the display using a sponge, cleaning cloth, or soft tissue with lightly moistened recognized cleaning product for medical equipment. Read and follow all labeled instructions on the cleaning product. In case of doubt about a certain cleaning product, use plain water.

CAUTION:

- **Take care not to damage or scratch the front glass or LCD. Be careful with rings or other jewelry and do not apply excessive pressure on the front glass or LCD.**
- **Do not apply or spray liquid directly to the display as excess liquid may cause damage to internal electronics. Instead, apply the liquid to a cleaning sponge, cloth, or tissue.**

ATTENTION :

- **Veillez à ne pas endommager ou rayer la vitre avant ou l'écran LCD. Soyez prudent lorsque vous portez des bagues ou autres bijoux et n'appliquez pas une pression excessive sur le verre avant ou l'écran LCD.**
- **N'appliquez ou ne vaporisez pas de liquide directement sur l'écran car l'excès de liquide peut endommager l'électronique interne. Appliquez plutôt le liquide sur une éponge, un chiffon ou un mouchoir en papier.**

3.2 EMC Notice

Guidance and Manufacturer's Declaration – Electromagnetic Emissions

EMI

The monitor is intended for use in the electromagnetic environment specified below. The customer or the user of the monitor should assure that it is used in such an environment.

Emissions test	Compliance	Electromagnetic Environment – Guidance
RF emissions CISPR 11	Group 1	The monitor uses RF energy only for its internal function. Therefore, its RF emissions are very low and are not likely to cause any interference with nearby electronic equipment.
RF emissions CISPR 11	Class B	The monitor is suitable for use in all establishments, including domestic establishments and those directly connected to the public low-voltage power supply network that supplies buildings used for domestic purposes.
Harmonic emissions IEC 61000-3-2	Class D	
Voltage fluctuations/ flicker emissions IEC 61000-3-3	Complies	

EMS

The monitor is intended for use in the electromagnetic immunity environment (Home healthcare environment defined in IEC60601-1-2) specified below. The customer or the user of the monitor should assure that it is used in such an environment.

Immunity Test	IEC 60601 Test Levels	Compliance Level	Electromagnetic Environment – Guidance
Electrostatic discharge (ESD) IEC 61000-4-2	± 8kV contact ± 15kV air	± 8kV contact ± 15kV air	Floors should be wood, concrete or ceramic tile. If floors are covered with synthetic material, the relative humidity should be at least 30%

Electrical fast transient/burst IEC 61000-4-4	± 2kV for power supply lines ± 1kV for input/ output lines	± 2kV for power supply lines	Mains power quality should be that of a typical commercial or hospital environment
Surge IEC61000-4-5	± 1 kV line(s) to line(s) ± 2 kV line(s) to earth	± 1 kV line(s) to line(s) ± 2 kV line(s) to earth	Mains power quality should be that of a typical commercial or hospital environment
Voltage dips, short interruptions and voltage variations on power supply input lines IEC 61000-4-11	0 % U_T (100 % dip in U_T) 0.5 cycles and 1 cycle 70 % U_T (30 % dip in U_T) 25/30 cycles 0 % U_T (100 % dip in U_T) 250/300 cycles	0 % U_T (100 % dip in U_T) 0.5 cycles and 1 cycle 70 % U_T (30 % dip in U_T) 25/30 cycles 0 % U_T (100 % dip in U_T) 250/300 cycles	Mains power quality should by that of a typical commercial or hospital environment. If the user of the monitor requires continued operation during power mains interruptions, it is recommended that the monitor be powered from an uninterruptible power supply or a battery.
Power frequency (50/60 Hz) magnetic field IEC 61000-4-8	30 A/m 50Hz or 60Hz	30 A/m 50Hz or 60Hz	Power frequency magnetic fields should be at levels characteristic of a typical location in a typical commercial or hospital environment. The product should be kept at least 15 cm away from the source of power frequency magnetic fields during use.

Immunity Test	IEC 60601 Test Levels	Compliance Level	Electromagnetic Environment – Guidance
Conducted RF IEC 61000-4-6 Radiated RF IEC 61000-4-3	Proximity electromagnetic field from RF wireless communication equipment (Specified the table below) 3 V 0.15 MHz to 80 MHz 6V ISM bands and amateur radio between 150 kHz and 80 MHz 80% AM at 1kHz 10 V/m 80 MHz to 2.7 GHzz 10 V/m at 80-2, 700MHz. And 9-28V/m at 385-6,000MHz, Pulse Mode: 27 V/m at 385MHz 28 V/m at 450MHz 9V/m at 710/745/780MHz 28 V/m at 810/870/930MHz 28 V/m at 1720/1845/1970MHz 28 V/m at 2450MHz 9V/m at 5240/5500/5785MHz	3 V 0.15 MHz to 80 MHz 6V ISM bands and amateur radio between 150 kHz and 80 MHz 80% AM at 1kHz 10 V/m 80 MHz to 2.7 GHz 10 V/m at 80-2, 700MHz. And 9-28V/m at 385-6,000MHz, Pulse Mode: 27 V/m at 385MHz 28 V/m at 450MHz 9V/m at 710/745/780MHz 28 V/m at 810/870/930MHz 28 V/m at 1720/1845/1970MHz 28 V/m at 2450MHz 9V/m at 5240/5500/5785MHz	Portable and mobile RF communications equipment should be used no closer to any part of the monitor, including cables, than the recommend separation distance calculated from the equation applicable to the frequency of the transmitter. **Recommended separation distance** **d = 1.2√P** **d = 1.2√P** 80 MHz to 800 MHz **d = 2.3√P** 800 MHz to 2.5 GHz Where P is the maximum output power rating of the transmitter in watts (W) according to the transmitter manufacturer and d is the recommended separation distance in meters (m). Field strengths from fixed RF transmitters, as determined by an electromagnetic site survey, [a] should be less than the compliance level in each frequency range. [b] Interference may occur in the vicinity of equipment marked with symbol: 
Proximity magnetic fields IEC 61000-4-39	8 A/m 30 kHz; CW modulation 65 A/m 134.2 kHz; Pulse modulation 2.1 kHz, 50 % duty cycle 7.5 A/m 13.56 MHz; Pulse modulation 50 kHz, 50 % duty cycle	8 A/m 30 kHz; CW modulation 65 A/m 134.2 kHz; Pulse modulation 2.1 kHz, 50 % duty cycle 7.5 A/m 13.56 MHz; Pulse modulation 50 kHz, 50 % duty cycle	/

NOTE 1：UT is the a.c. mains voltage prior to application of the test level.
NOTE 2：At 80 MHz and 800 MHz, the higher frequency range applies.
NOTE 3：Guidelines regarding conducted disturbances induced by RF fields or radiated RF fields may not apply in all situations. Electromagnetic propagation is affected by absorption and reflection from structures, objects and people.
NOTE 4：The ISM (industrial, scientific and medical) bands between 0.15 MHz and 80 MHz are 6.765 MHz to 6.795 MHz; 13.553 MHz to 13.567 MHz; 26.957 MHz to 27.283 MHz; and 40.66 MHz to 40.70 MHz . The amateur radio bands between 0.15 MHz and 80 MHz are 1.8 MHz to 2.0 MHz, 3.5 MHz to 4.0 MHz, 5.3 MHz to 5.4 MHz, 7 MHz to 7.3 MHz, 10.1 MHz to 10.15 MHz, 14 MHz to 14.2 MHz, 18.07 MHz to 18.17 MHz, 21.0 MHz to 21.4 MHz, 24.89 MHz to 24.99 MHz, 28.0 MHz to 29.7 MHz and 50.0 MHz to 54.0 MHz.

a. Field strengths from fixed transmitters, such as base stations for radio (cellular/cordless telephones and land mobile radios, amateur radio, AM and FM radio broadcast and TV broadcast cannot be predicted theoretically with accuracy. To assess the electromagnetic environment due to fixed RF transmitters, an electromagnetic site survey should be considered. If the measured field strength in the location in which the monitor is used exceeds the applicable RF compliance level above, the monitor should be observed to verify normal operation. If abnormal performance is observed, additional measures may be necessary, such as reorienting or relocating the monitor.

b. Over the frequency range 150 kHz to 80 MHz, field strengths should be less than 10 V/m.

Recommended Separation Distance

The monitor is intended for use in an electromagnetic environment in which radiated RF disturbances are controlled. The customer of the user of the monitor can help prevent electromagnetic interference by maintaining a minimum distance between portable and mobile RF communications equipment (transmitters) and the monitor as recommended below, according to the maximum output power of the communications equipment.
Immunity to proximity fields from following RF wireless communication equipment has been confirmed:

Test frequency (MHz)	Bandwidth a) (MHz)	Service a)	Modulation b)	Maximum power (W)	Minimum separation distance (m)	IEC/EN60601 test level (V/m)	Compliance level (V/m)
385	380-390	TETRA400	Pulse modulation b)	1.8	0.3	27	27
450	430-470	GMRS 460, FRS 460	FM ±5 kHz deviation 1 kHz sine	2	0.3	28	28
710	704-787	LTE Band 13, 17	Pulse modulation b) 217 Hz	0.2	0.3	9	9
745							
780							
810	800-960	GSM 800 / 900, TETRA 800, iDEN 820 CDMA 850, LTE Band 5	Pulse modulation b) 18 Hz	2	0.3	28	28
871							
930							
1720	1700-1990	GSM 1800; CDMA 1900; GSM 1900; DECT; LTE Band 1, 3, 4, 25; UMTS	Pulse modulation b) 217 Hz	2	0.3	28	28
1845							
1970							
2450	2400-2570	Bluetooth, WLAN, 802.11 b/g/n, RFID 2450, LTE Band 7	Pulse modulation b) 217 Hz	2	0.3	28	28
5240	5100-5800	WLAN 802.11 a/n	Pulse modulation b) 217 Hz	0.2	0.3	9	9
5500							
5785							

- For some services, only the uplink frequencies are included.
- The carrier shall be modulated using a 50 % duty cycle square wave signal.

Rated maximum output power of transmitter W	**Separation distance according to frequency of transmitter**		
	150kHz to 80MHz **d=1.2√P**	**80MHz to 800MHz** **d=1.2√P**	**800MHz to 2.5GHz** **d=2.3√P**
0.01	0.12	0.12	0.23
0.1	0.38	0.38	0.73
1	1.2	1.2	2.3
10	3.8	3.8	7.3
100	12	12	23

For transmitters rated at a maximum output power not listed above, the recommended separation distance d in meters (m) can be estimated using the equation applicable to the frequency of the transmitter, where P is the maximum output power rating of the transmitter in watts (W) according to the transmitter manufacturer.

NOTE 1：At 80 MHz and 800 MHz, the separation distance for the higher frequency range applies.

NOTE 2：These guidelines may not apply in all situations. Electromagnetic propagation is affected by absorption and reflection from structures, objects and people.

NOTE 3：The EUT was stopped operating during the test, but it is self-recoverable after test.

NOTE 4 The EUT was stopped operating during the test, but it is self-recoverable after test.

CAUTION and WARNING

1. The unit is for exclusive interconnection with IEC 60XXX certified equipment outside of patient environment and IEC 60601-1 certified equipment inside the patient environment.
2. This device complies with EN60601-1-2, To minimize the interference from other equipment, a minimum 0.5 m distance shall be kept form other potential electromagnetic sources, such as the Cell Phone.
3. The power cable connector is the primary means of detaching the system from the power supply. The monitor should be installed close to a power outlet, which is easily accessible.
4. Handle with care when transporting. Save packaging for transporting.
5. AC power inlet is considered as Disconnect Device.
6. To prevent fire or shock hazards, do not expose this unit to rain or moisture. Also, do not use this unit's polarized plug with an extension cord receptacle or other outlets unless the prongs can be fully inserted.
7. Do not modify this equipment without authorization of the manufacturer.
8. To prevent the risk of electric shock, make sure power cord is fully disengage the power to the unit. Please disconnect the power cord from the AC outlet.
9. To prevent electric shock, please do not remove cover or any internal components. Refer to a qualified technician for service.
10. This device is intended to be used (1) outside the "patient vicinity" area or (2) within the "patient vicinity" to the patient such as consulting rooms.
11. To avoid risk of electric shock, this equipment must only be connected to a supply mains with protective ground.
12. The LCD monitor become heat when it's working, please do not touch the panel and plastic enclosure over 10 seconds, and do not touch the mental enclosure on the back of the LCD monitor over 1 second.
13. For safety reasons, turn-off the power switch and unplug the monitor before cleaning.
14. Equipment with SIP/SOP connectors should either comply with IEC 60601-1 and/or IEC 60601-1-1 harmonized national standard or the combination should be evaluated.
15. Power cord shell be connected to a socket-out with earthing connection.
16. The monitor series requires special precautions regarding EMC and need to be installed. You need to carefully read EMC Information and the "PRECAUTIONS" section in this document, and observe the following instructions when installing and operating the product.
17. The monitor series should not be used adjacent to or stacked with other equipment. If adjacent or stacked use is necessary, the equipment or system should be observed to verify normal operation in the configuration in which it will be used.
18. Anyone who connects additional equipment to the signal input part or signal output parts, configuring a

Medical system, is responsible that the system complies with the requirements of IEC/EN60601-1-2.

19. Be sure to use the cables attached to the product, or cables specified by DIVA. Use of cables other than those specified or provided by DIVA of this equipment could result in increased electromagnetic emissions or decreased electromagnetic immunity of this equipment and improper operation.
20. If this equipment is modified, appropriate inspection and testing must be conducted to ensure continued safe use of the equipment.
21. CAUTION: Double pole, neutral fusing. Disconnect mains before servicing.

⚠ ATTENTION ET ⚠ AVERTISSEMENT

1. L'unité est destinée à une interconnexion exclusive avec des équipements certifiés IEC 60XXX en dehors de l'environnement du patient et des équipements certifiés IEC 60601-1 à l'intérieur de l'environnement du patient.
2. Cet appareil est conforme à la norme EN60601-1-2. Pour minimiser les interférences provenant d'autres équipements, une distance minimale de 0,5 m doit être maintenue par rapport à d'autres sources électromagnétiques potentielles, comme les téléphones cellulaires.
3. Le connecteur du cordon d'alimentation est le principal moyen de débrancher le système de l'alimentation électrique. Le moniteur doit être installé à proximité d'une prise de courant facilement accessible.
4. À manipuler avec précaution lors du transport. Conservez l'emballage pour le transport.
5. L'entrée d'alimentation CA est considérée comme un dispositif de déconnexion.
6. Pour éviter tout risque d'incendie ou de choc électrique, n'exposez pas cet appareil à la pluie ou à l'humidité. En outre, n'utilisez pas la fiche polarisée de cet appareil avec une prise de rallonge ou d'autres prises, à moins que les broches puissent être complètement insérées.
7. Ne pas modifier cet équipement sans l'autorisation du fabricant.
8. Pour éviter tout risque de choc électrique, assurez-vous que le cordon d'alimentation est débranché de la prise murale. Pour désactiver complètement l'alimentation de l'appareil, débranchez le cordon d'alimentation de la prise CA.
9. Pour éviter les chocs électriques, n'enlevez pas le couvercle ou des composants internes. Faites appel à un technicien qualifié pour l'entretien.
10. Ce dispositif est destiné à être utilisé (1) à l'extérieur de la zone « proximité du patient » ou (2) à l'intérieur de la zone « proximité du patient », par exemple dans les salles de consultation.
11. Pour éviter le risque de choc électrique, cet équipement doit être uniquement raccordé à un réseau d'alimentation avec protection par mise à la terre.
12. LCD L'écran LCD devient chaud lorsqu'il fonctionne, ne touchez pas le panneau et le boîtier en plastique pendant 10 secondes et ne touchez pas le boîtier mental à l'arrière du moniteur LCD pendant 1 seconde.
13. Pour des raisons de sécurité, éteignez l'interrupteur d'alimentation et débranchez le moniteur avant de le nettoyer.
14. Les équipements dotés de connecteurs SIP / SOP doivent être conformes à la norme nationale harmonisée CEI 60601-1 et / ou CEI 60601-1-1 ou la combinaison doit être évaluée.
15. Le connecteur du cordon d'alimentation est le principal moyen de débrancher le système de l'alimentation électrique. Le moniteur doit être installé à proximité d'une prise de courant facilement accessible.
16. La série de moniteurs nécessite des précautions particulières concernant EMC et doit être installée. Vous devez lire attentivement les informations EMC et la section « PRÉCAUTIONS » de ce document, et respecter les instructions suivantes lors de l'installation et de l'exploitation du produit.
17. La série de moniteurs ne doit pas être utilisée à côté ou empilée avec d'autres équipements. Si l'utilisation adjacente ou empilée est nécessaire, l'équipement ou le système doit être observé pour vérifier le fonctionnement normal dans la configuration dans laquelle il sera utilisé.
18. Quiconque relie des équipements supplémentaires à la pièce d'entrée du signal ou aux pièces de sortie du signal, configurant un système médical, est responsable que le système soit conforme aux exigences de l'IEC/EN60601-1-2.
19. Assurez-vous d'utiliser les câbles fixés au produit, ou les câbles spécifiés par DIVA. L'utilisation de câbles autres que ceux spécifiés ou fournis par DIVA de cet équipement pourrait entraîner une augmentation des émissions électromagnétiques ou une diminution de l'immunité électromagnétique de cet équipement et un mauvais fonctionnement.
20. Si cet équipement est modifié, des inspections et des essais appropriés doivent être effectués afin d'assurer une utilisation sécuritaire continue de l'équipement.
21. ATTENTION : Double poteau, neutre futilisation. Débranchez les conduites avant l'entretien.

4. Monitor Installation

WARNING: Sufficient expertise is required to install this equipment. All devices and complete setup must be tested before operation.

AVERTISSEMENT : Une expertise suffisante est requise pour l'installation de cet équipement. Tous les appareils et la configuration complète doivent être testés avant d'être mis en service.

4.1 Installation Procedure

To install your monitor

To get access to the connectors, put the display on a flat surface.

1. Connect one or more video source(s) to the corresponding video inputs of the monitor. Please use the appropriate video cable(s).
2. Connect the USB or RS232 connector for touch screen function.
3. Connect the Audio cable for audio function.
4. Connect the power cord input to a power adapter with a grounded Power Outlet.
5. Connect the power adapter input to the monitor.
6. Install cable cover back on the monitor.

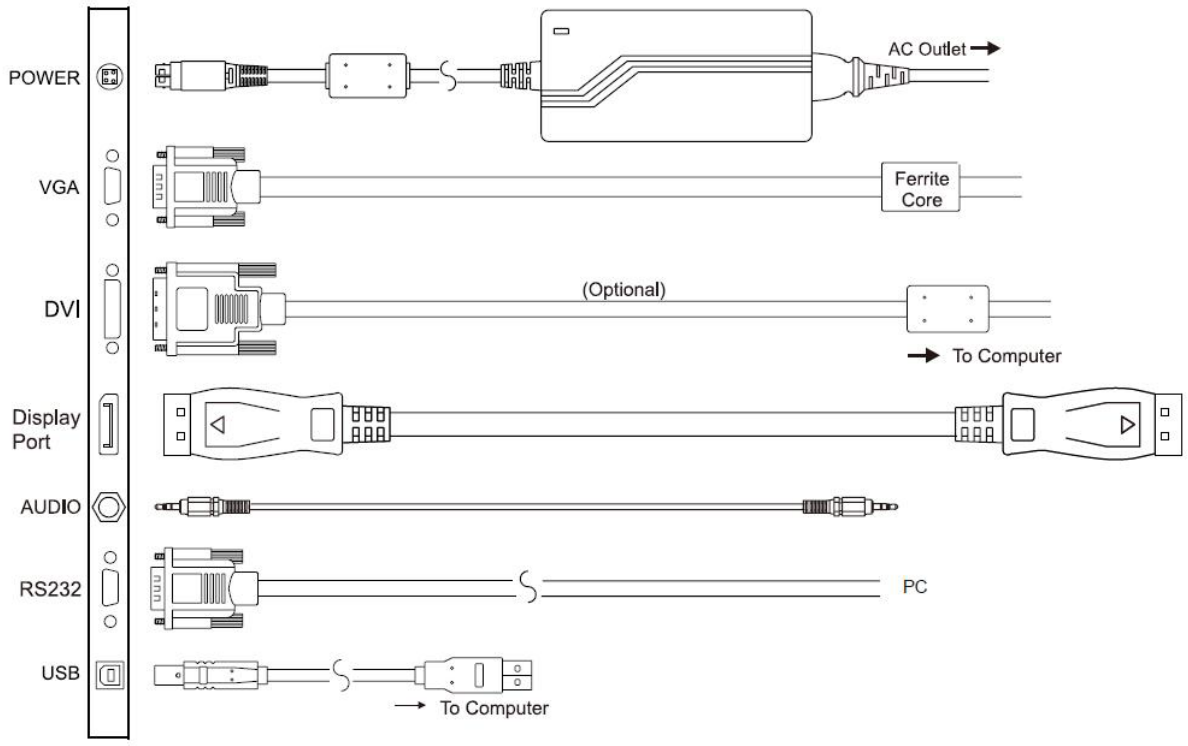

Image 4-1-1 Connectors (RGP Model)

4.2 Stand Removal & VESA Mount Installation

This monitor provided with a validated stand. The monitor has been designed to be used in landscape position with a maximum tilt of -5° to 30° backward. If a different stand is needed in the final application, the monitor VESA interface (VESA 100 mm standard) could be used.

To remove the stand and install the VESA mount

1. Place the monitor face down on a flat, solid and stable surface.
2. Remove the hinge cover
3. Unscrew the 4x M4 (length: 10mm) screws fixing the stand and rear cover
4. Remove the stand and install the VESA mount.

Caution: Use a protective cloth or cushion to prevent the monitor and LCD from any damage or scratches.

Attention: Utilisez un chiffon ou un coussin de protection pour éviter d'endommager ou rayer le moniteur et l'écran LCD.

Tip: Store the fixation screws at a known place for possible future use.

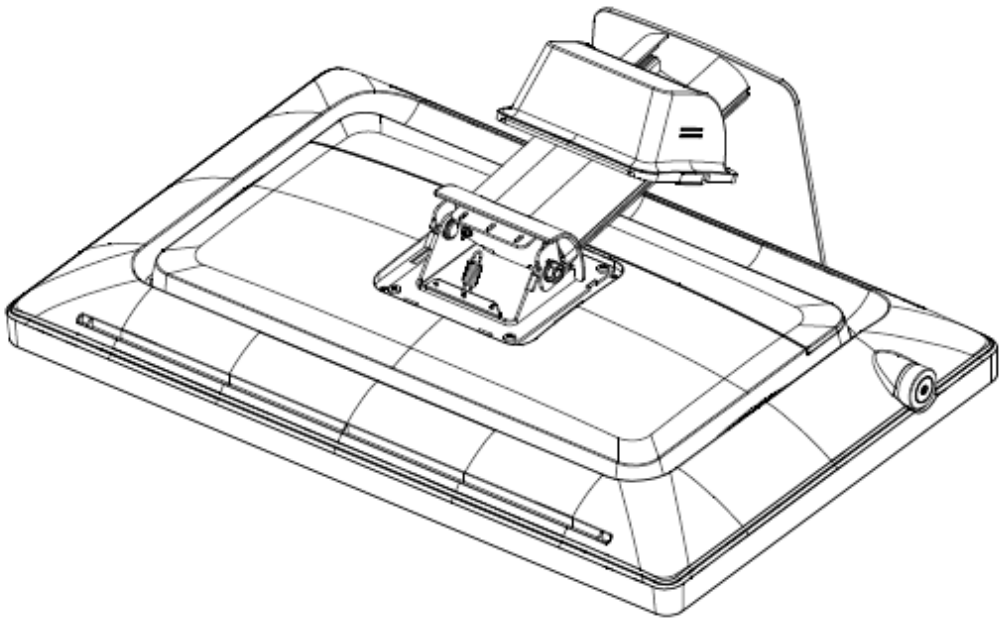

Image 4-2-1 Remove the hinge cover

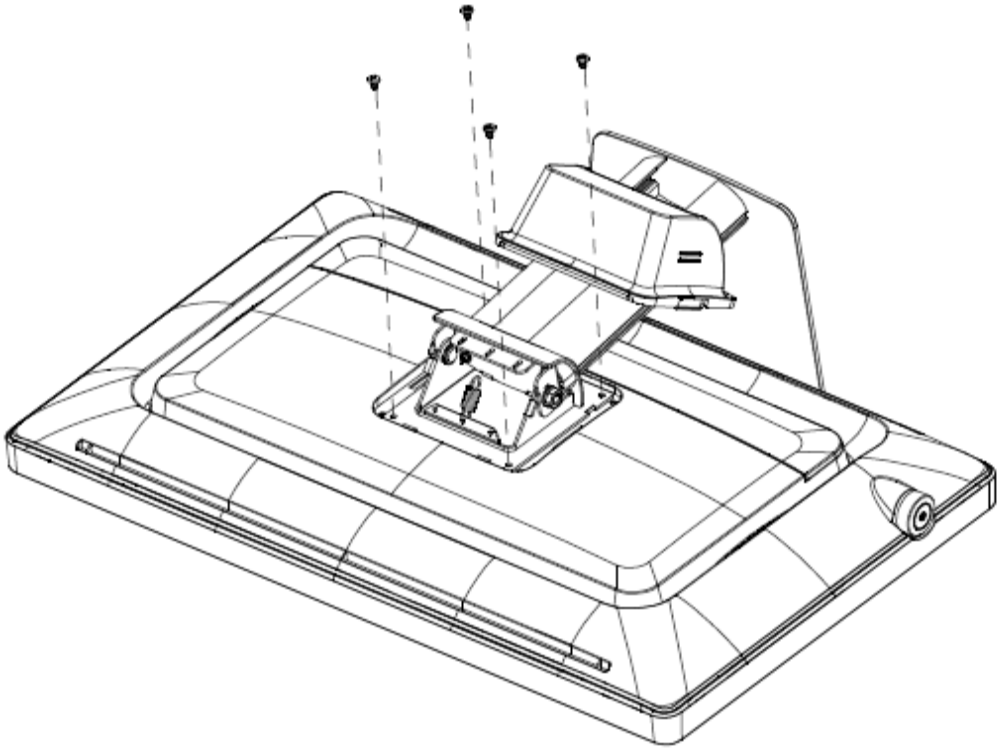

Image 4-2-2 Remove the 4x M4 screws

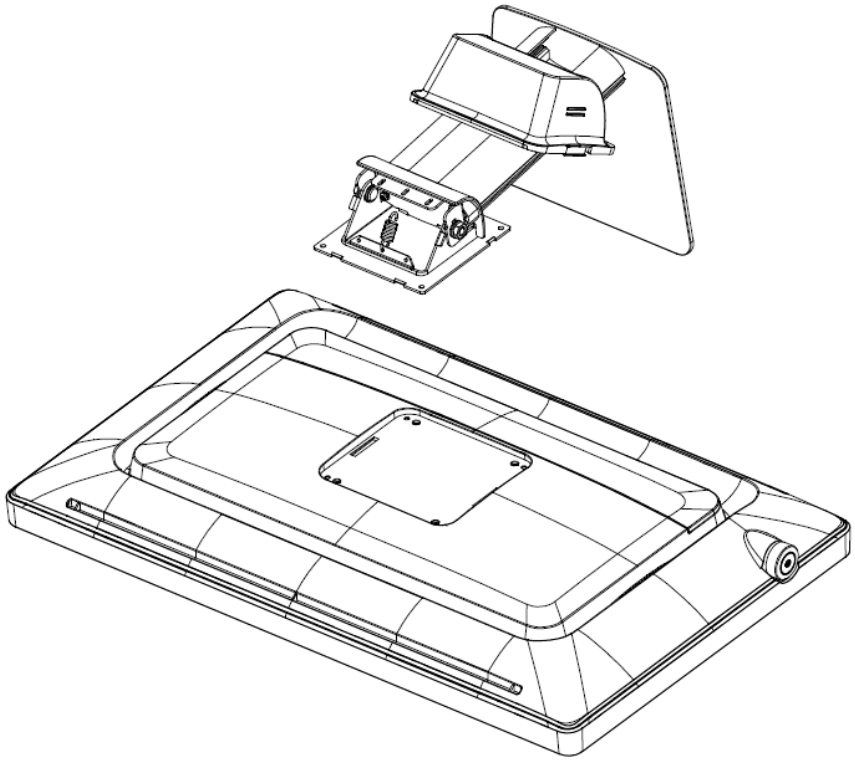

Image 4-2-3 Remove the stand from the monitor

5. Attach the monitor in landscape position to a 100 mm VESA mounting bracket. Mounting in portrait position is not feasible. To be installed by skilled person only.

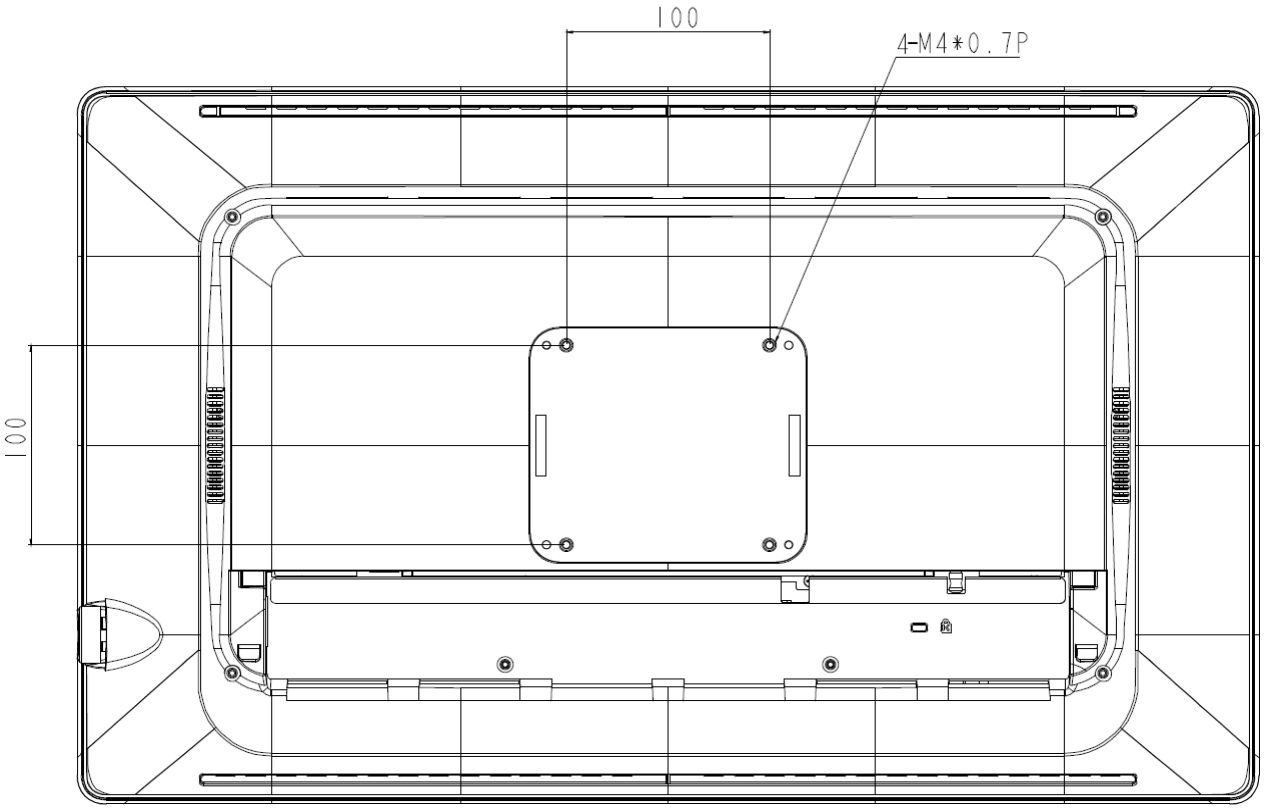

Image 4-2-4 VESA mount is located at the back of the monitor.

5. Daily Operation

5.1 Main Power Switch

The monitor is switched on or off with the main switch, **sees image 1-2 Control key.**

5.2 Power/Status Indication

During start-up the monitor performs signal detection before going into normal operation mode. Depending on the detection result, the status LED on the side of the monitor will show different LED color.

Below is an overview of the possible status LED modes:

LED Color	Status LED modes	Operation Description
OFF (No LED)	OFF mode	Monitor is not powered.
Green, static	Normal mode	Monitor is ON, video sync OK.
Orange/ Amber, static	Stand-by mode (Power saving)	Automatically enters power saving and standing by for input signal

6. OSD Menu Operation

The Charts displays the function tree and brief explanations of the functions. Color, OSD, and other adjustments have submenus under each tree.

6.1 On-Screen Display

The LCD monitor features an On-Screen Display (OSD) menu with easily identifiable icons designed to make adjustment of your monitor display settings a more user-friendly process. When highlighted, the icon illustrates the control function and brief instruction to assist the user in identifying which control needs adjustment.

The OSD menu is activated by pressing the Control Dial inward and you can select and adjust the function of your choice by rotating and clicking the Control Dial. The main menu displays a list of sub menu icons and the current video input mode. Rotate the dial to move the highlights to the control you would like to adjust, then press the Control Dial inward to select that control or to activate that function. Depending on the control you selected, a submenu of the control with a status bar will appear. The status bar indicates in which direction, form the factory preset; your adjustments are being made. Rotate the Control Dial to adjust the control.

When you have finished making the adjustments, the setting is saved automatically by activating the control function. If you do not touch the Control Dial for 30 seconds, the OSD is automatically exited saving your current settings.

6.2 Menu Descriptions

The LCD monitor is capable of accepting VGA, DVI or HDMI, Display Port signal inputs and therefore has two different sets of OSD control functions. Because the digital signaling always achieves optimum display quality without mush adjustment, it requires much less OSD functions than the analog input mode. The following options are not available in digital input mode: Auto Setup, Display, Clock/Phase, denoted by asterisk (*) in the following descriptions. If switched to digital input model, you will encounter a “Not Available” message.

6.3 OSD Structure

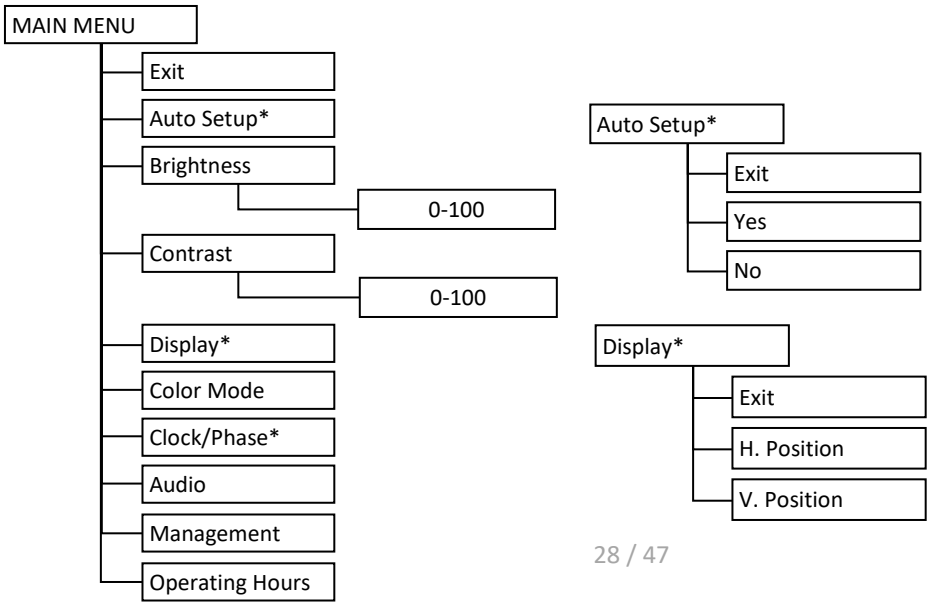

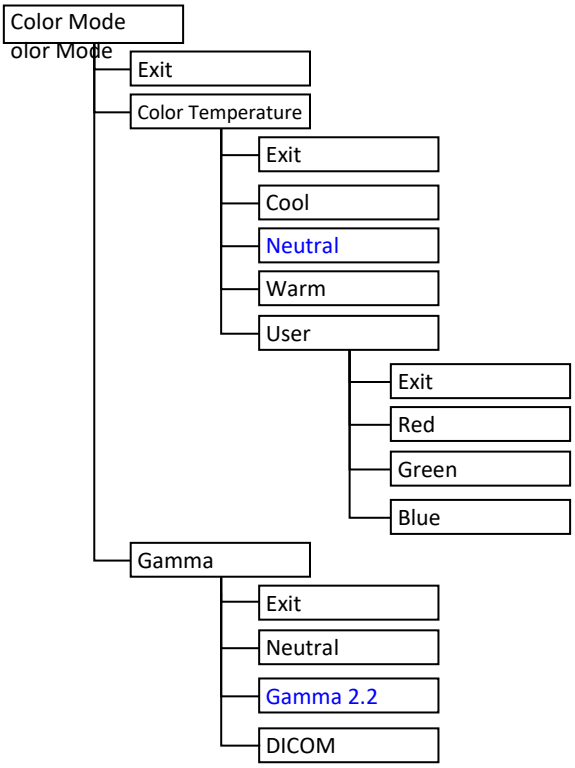
Color Mode
olor Mode
Exit
Color Temperature
Exit
Cool
Neutral
Warm
User
Exit
Red
Green
Blue
Gamma
Exit
Neutral
Gamma 2.2
DICOM

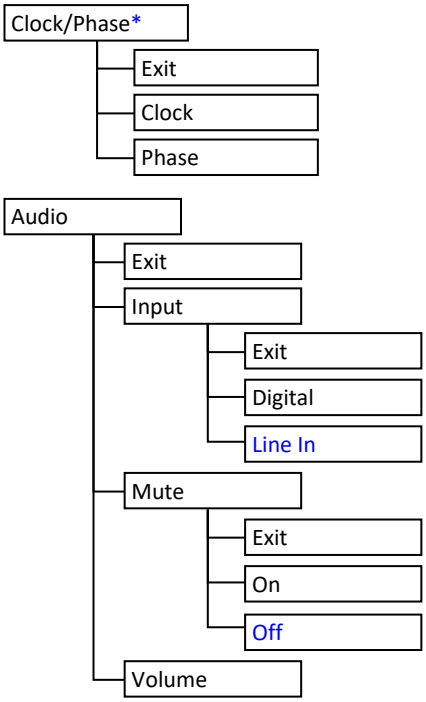
Clock/Phase*
Exit
Clock
Phase
Audio
Exit
Input
Exit
Digital
Line In
Mute
Exit
On
Off
Volume

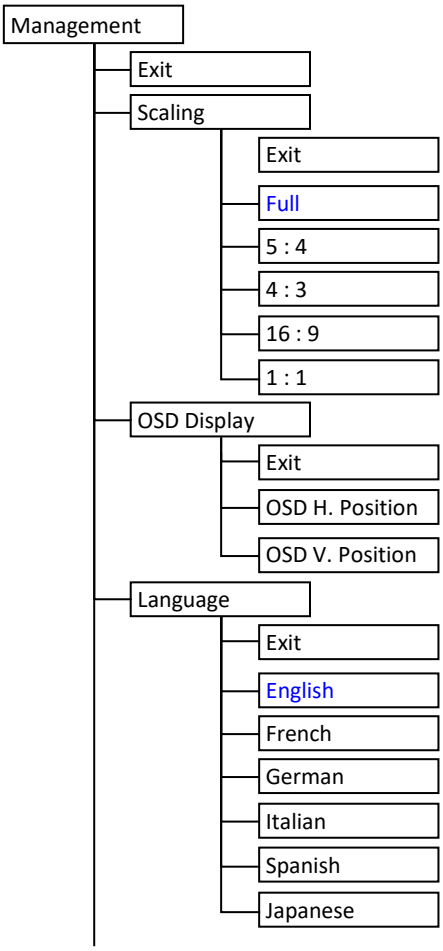
Management
Exit
Scaling
Exit
Full
5 : 4
4 : 3
16 : 9
1 : 1
OSD Display
Exit
OSD H. Position
OSD V. Position
Language
Exit
English
French
German
Italian
Spanish
Japanese

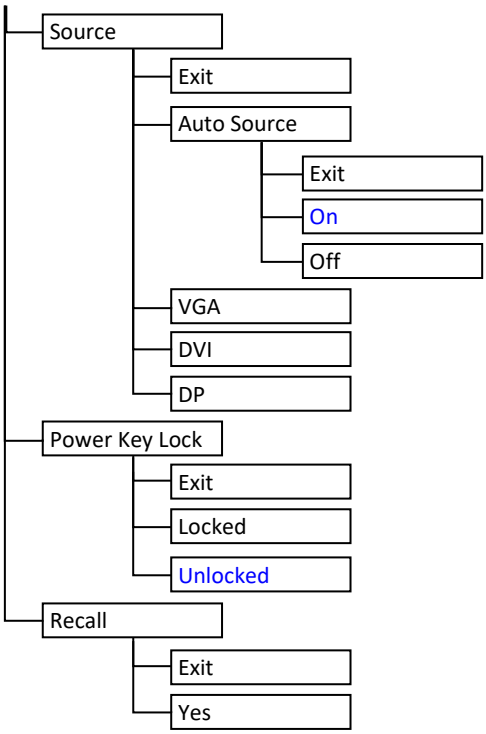
Source
Exit
Auto Source
Exit
On
Off
VGA
DVI
DP
Power Key Lock
Exit
Locked
Unlocked
Recall
Exit
Yes

6.4 Main Menu



Image 6-4 Main OSD menu

6.4.1 Exit

To exit the OSD menu.

6.4.2 Auto Setup (Only Support Analog)

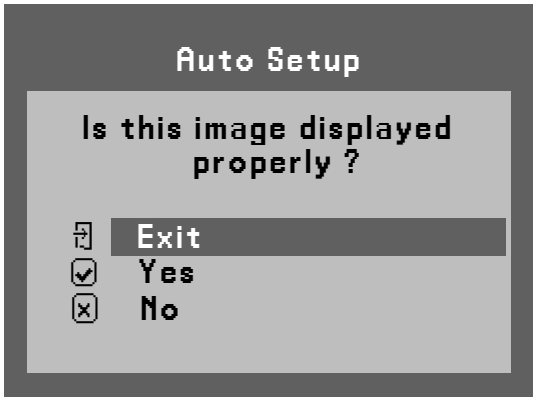

Image 6-4-2 Auto Setup OSD menu

- Exit: To exit the auto setup of the OSD menu.
- Yes: Automatically adjust the analog settings of the image.
- No: Enter Clock/Phase OSD menu when NO is selected.

6.4.3 Brightness

This function allows the user to adjust the monitor's brightness setting manually.

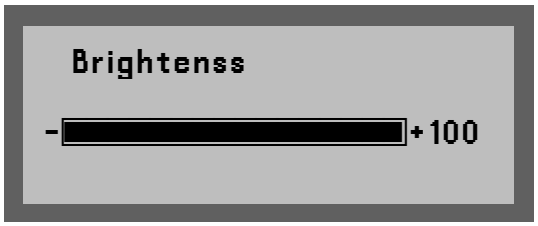

Image 6-4-3 Brightness OSD menu

6.4.4 Contrast

This function allows the user to adjust the contrast setting of the monitor manually.

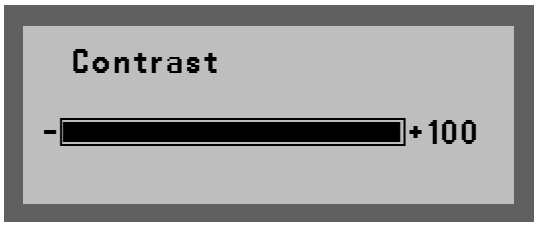

Image 6-4-4 Contrast OSD menu

6.4.5 Display (Only Support Analog)

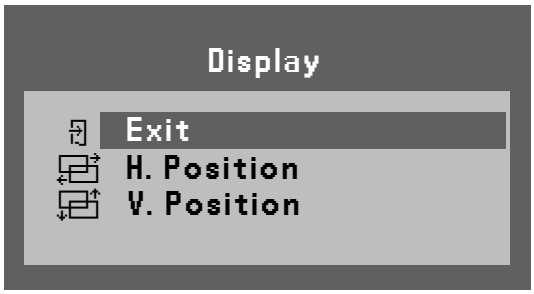

Image 6-4-5 Display OSD menu

- Exit: To exit the display of the OSD menu.
- H. Position: The function allows user manually adjust the image position horizontally on the screen.

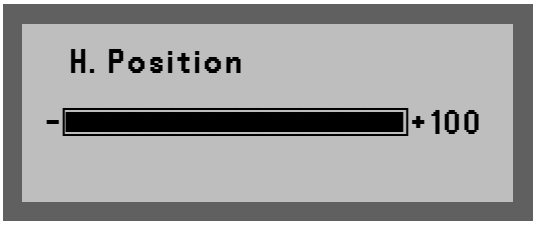

Image 6-4-5-1 H. Position OSD menu

- V. Position: The function allows users manually adjust the image position vertically on the screen.

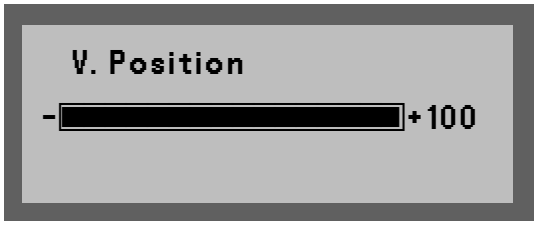

Image 6-4-5-2 V. Position OSD menu

6.4.6 Color Mode

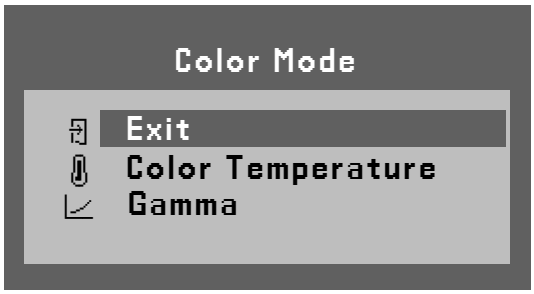

Image 6-4-6 Color Mode OSD menu

- Exit: To exit the color mode of the OSD menu.
- Color Temperature: Allows users to select preset color temperature of the display setting. Preset color temperatures are Cool (9300K), Neutral (6500K), Warm (5400K) & User adjustable color temperature.

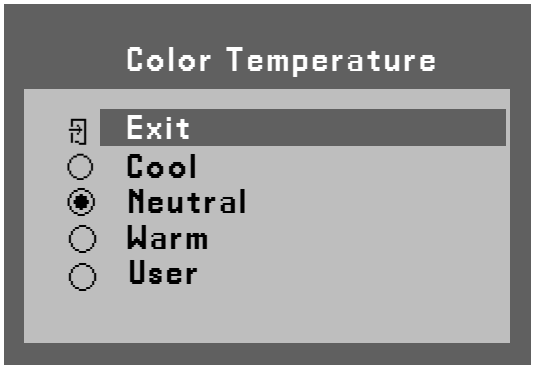

Image 6-4-6-1 Color Temperature OSD menu

- User: User can adjust and set tones.

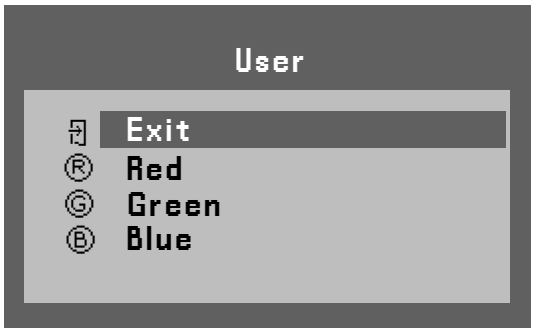

Image 6-4-6-2 User OSD menu

  - Red: Adjust red and equivalent colors at the range from 0 to 100. The greater the value is, the deeper the color is, and vice versa.
  - Green: Adjust green and equivalent colors at the range from 0 to 100. The greater the value is, the deeper the color is, and vice versa.
  - Blue: Adjust blue and equivalent colors at the range from 0 to 100. The greater the value is, the deeper the color is, and vice versa User can adjust and set tones.

- Gamma: Allows users to select preset gamma curve of the display setting.
  Preset gamma curve are Neutral & Gamma 2.2.
- DICOM: Allows users to select preset DICOM curve of the display setting.

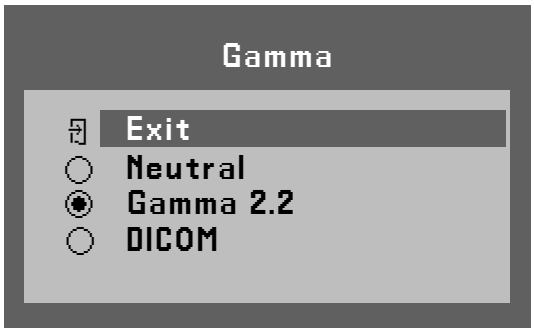

Image 6-4-6-3 Gamma OSD menu

6.4.7 Clock / Phase (Only Support Analog)

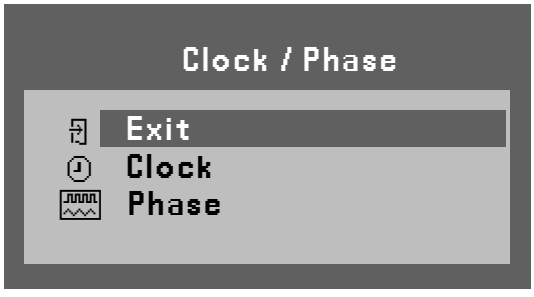

Image 6-4-7 Clock / Phase OSD menu

- Exit: To exit the Clock / Phase of the OSD menu.
- Clock: Allows users to adjust the clock of the display setting manually.

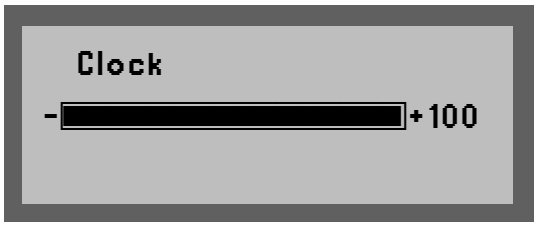

Image 6-4-7-1 Clock OSD menu

- Phase: Allows users to adjust the phase of the display setting manually.

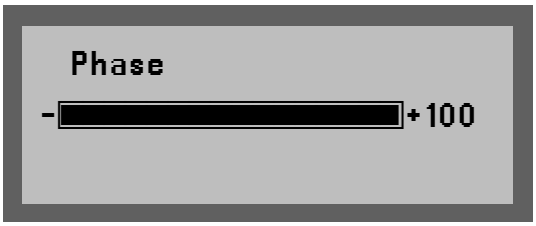

Image 6-4-7-2 Phase OSD menu

6.4.8 Audio

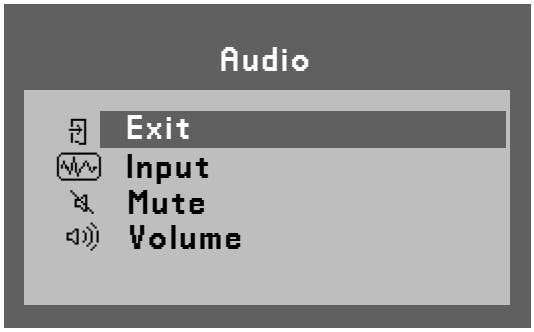

Image 6-4-8 Audio OSD menu

- Exit: To exit the Audio of the OSD menu.
- Input: Allows users to select the audio input source of the display setting.
  Digital & Line-In audio input source are available.

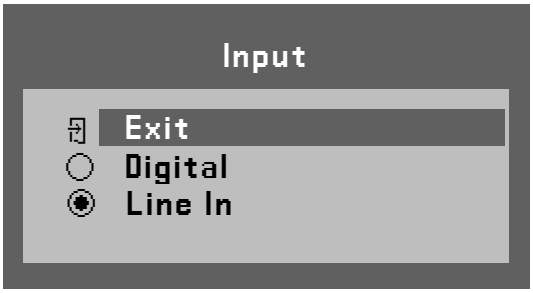

- Mute: Allows users to Mute(On) & Unmute(Off) the audio output of the display setting.

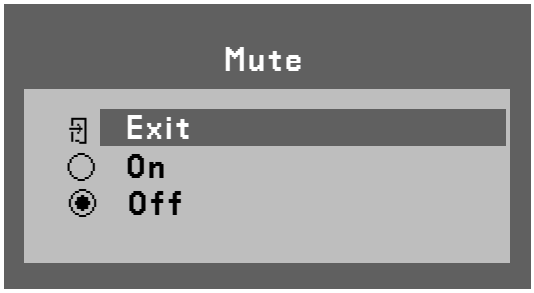

Image 6-4-8-2 Audio Mute OSD menu

- Volume: Allows users to adjust the audio output of the display setting.

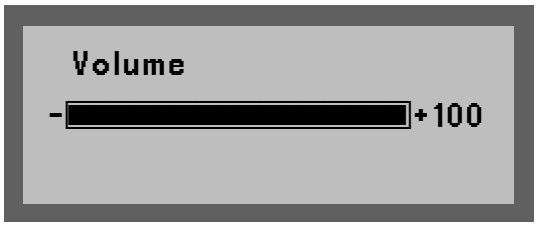

Image 6-4-8-3 Audio Volume OSD menu

6.4.9 Management

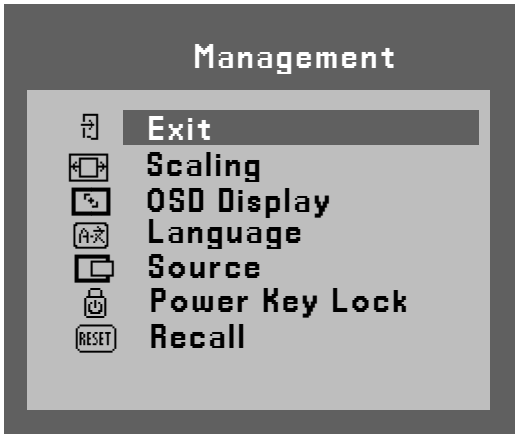

Image 6-4-9 Management OSD menu

- Exit: To exit the Management of the OSD menu.

6.4.9.1 Scaling

Allows users to select preferred image scaling of the display setting

- Full screen: Expands the current image to the full size of the monitor.
- Aspect ratio (5:4, 4:3, 16:9): Expands the video image until its largest dimension fills the screen, while maintaining the aspect ratio of the image size. For example, when input timing is not equal to panel native resolution 1920x1080 (16:9 aspect ratio), the image may be displayed with black bars to fill the screen.
- 1 : 1: Display image as its original input image resolution.

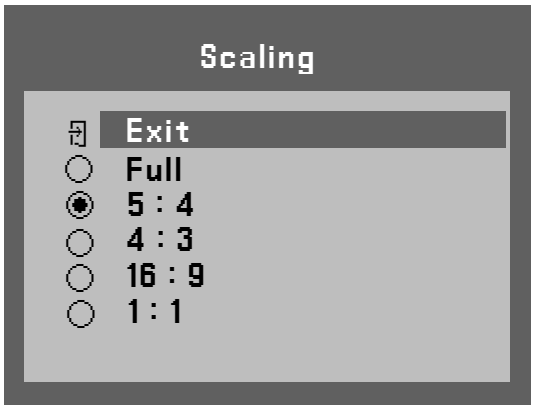

Image 6-4-9-1 Scaling OSD menu

6.4.9.2 OSD Display

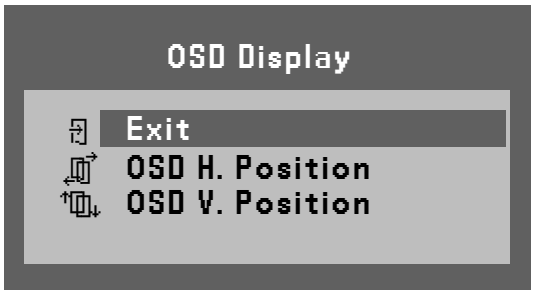

Image 6-4-9-2 OSD Display menu

- Exit: To exit the OSD Display of the OSD menu.
- OSD H. Position: Allows users to set OSD menu in horizontal position on the display.



Image 6-4-9-2a OSD Horizontal Position OSD menu

- OSD V. Position: Allows users to set OSD menu in vertical position on the display.



Image 6-4-9-2b OSD Vertical Position OSD menu

6.4.9.3 Language

- Exit: To exit the Language of the OSD menu.
- English, French, German, Italian, Spanish & Japanese OSD menu languages are available for users to select preferred languages.



Image 6-4-9-3 Language OSD menu

6.4.9.4 Source

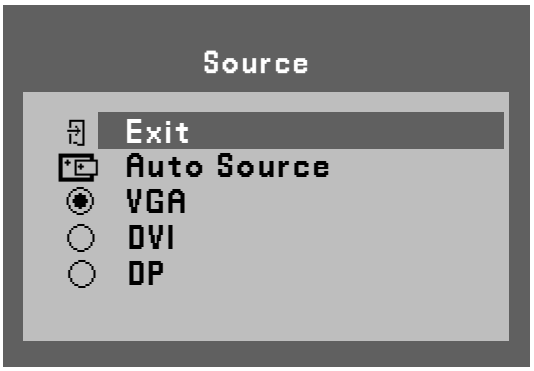

Image 6-4-9-4a Source OSD menu

- Exit: To exit the Source of the OSD menu.
- Auto Source: Allows users to Enable or Disable the Auto Select function of the display setting.

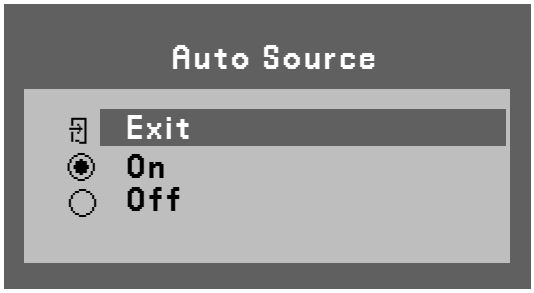

Image 6-4-9-4 Auto Source of the Source OSD menu

- VGA, DVI/ HDMI & Display Port (DP) sources are available for user to select preferred input source.

6.4.9.5 Power Key Lock

- Exit: To exit the Power Key Lock of the OSD menu.
- Locked: Allows users to **Disable** the DC power key function of the display setting.
- Unlocked: Allows users to **Enable** the DC power key function of the display setting.

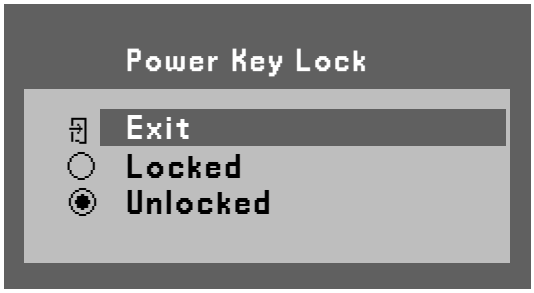

Image 6-4-9-5 Power Key Lock OSD menu

6.4.9.6 Recall

- Exit: To exit the Recall function of the OSD menu.
- Yes: Allows users to recall the display setting back to factory default setting.

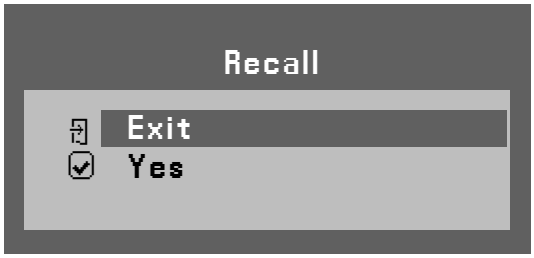

Image 6-4-9-6 Recall OSD menu

6.4.10 Operating Hours

- Keep records of the monitor operating hours.



Image 6-4-10 Operation Hours OSD menu

6.5 Supported Video Modes

Resolution	Pixel-rate [MHz]	Line-rate [kHz]	Frame-rate [Hz]	VGA	DVI	DP
640x480	25.200	31.500	60.000	O	O	O
640x480	31.500	37.861	72.809	O		
640x480	31.500	37.500	75.000	O		
720x400	28.322	31.469	70.087	O	O	O
800x600	36.000	35.156	56.250	O		
800x600	40.000	37.879	60.317	O	O	O
800x600	50.000	48.077	72.188	O		
800x600	49.500	46.875	75.000	O		
1024x768	65.000	48.363	60.004	O	O	O
1024x768	75.000	56.476	70.069	O		
1024x768	78.750	60.023	75.029	O		
1280x1024	108.000	63.981	60.020	O	O	O
1280x1024	135.000	79.976	75.025	O		
1600x1200	162.000	75.000	60.000	O	O	O
1920x1080	148.504	67.502	60.002	◎	◎	◎
832x624	57.284	49.722	74.550	O	O	O

7. Technical Specifications

Product Description	23.8” LCD Touch Screen Monitor 23.8” LCD Monitor
Model	RGP2462AMII
Screen Technology	AHVA
Active Screen Size (Diagonal)	604.70 mm (23.81”)
Active Screen Size (H X V)	527.04 mm (H) x 296.46 mm (V)
Aspect Ratio (H:V)	16:9
Resolution	FHD (1920 x 1080)
Pixel Pitch	0.2745 mm (H) x 0.2745 mm (V)
Color Support	16.7M colors (RGB 6-bit + Hi FRC)
Viewing Angle (H, V)	178 / 178 (CR=10)
Panel Brightness (cd/m²)	250(Typ.)/ 200(Min.)
Response Time	14 ms (Typ., Grey to Grey)
Housing Color	Front Bezel: White-N9/BLACK-5816 Rear Cover: White-N9/BLACK-5816 IO Cover: Grey-5817/BLACK-80007 Control Keys: Aluminum/Grey-5817 Stand: White-N9/BLACK-5816
Video Input Signals	1xDisplay Port 1xDVI 1xD-SUB 15 Pin (VGA) 1xPhone Jack 3.5mm
Power Rating	24V dc, 1.4 A
Power Supply	Delta Electronics, Inc. Model MEA-065A24C 6-A Input: 100-240V ac, 1.5-0.75 A, 50-60Hz Output: 24 V dc, 2.71A
Power Consumption (Maximum)	< 35 W~45 W
Power Consumption (Stand-By)	< 3 W

OSD Languages	English, French, German, Italian, Spanish & Japanese.
Dimensions (W X H X D)	581 x 400 x 175 mm
Dimensions Packed (W X H X D)	702 x 277 x 526 mm
Net Weight With Stand	9.3 kg ± 0.2 kg
Tilt Angle	-5 ±2 and 30 ±2 degrees
Mounting Standard	VESA (100 x 100 mm)
Certifications	・ ANSI/AAMI ES60601-1: ;CAN/CSA-C22.2 No. 60601-1 ・ FCC Part 15 subpart B ・ CE(EN 55032/EN 55035;EN 62368-1;WEEE;RoHS); IEC/EN 60601-1; EN60601-1-2;
Supplied Accessories	・ User Guide ・ AC Power Cord ・ VGA Cable ・ DP Cable ・ DVI Cable ・ Audio Cable ・ USB Cable (for touch version) ・ Power Adapter (Delta 24V) ・ Optional: RS232 Cable
Operating Temperature	0°C to 40°C
Storage Temperature	-20°C to 60°C
Operating Humidity	30% - 75% (performance; non-condensing);
Storage Humidity	10% - 90% (non-condensing)
Operation Altitude	700 hPa to 1060 hPa (3000m)
MTBF	30000 hrs
Ingress Protection	Front side: IP65 / Back side: IPx1

Intended User Profile	• Age: Adult (specify range 21~70) • Gender: Can be use by all genders • Linguistic/ Cultural Background: At least English • Education/ Professional Competence: General level of education • Intended User Group: Hospital staff • Intended location: Medical environment • Knowledge Base: User should possess basic medical knowledge • Type of equipment: Portable (on a table) • Mode of operation: Continuous Operation • Parts of the device: No Applied parts • Product Lifetime: 5 years • Unsuitable environment: The equipment not suitable for use in the presence of a flammable anesthetic mixture with air or with oxygen or nitrous oxide; Not AP or APG Category. • Ingress Protection: IPx0

8. Outline Dimension

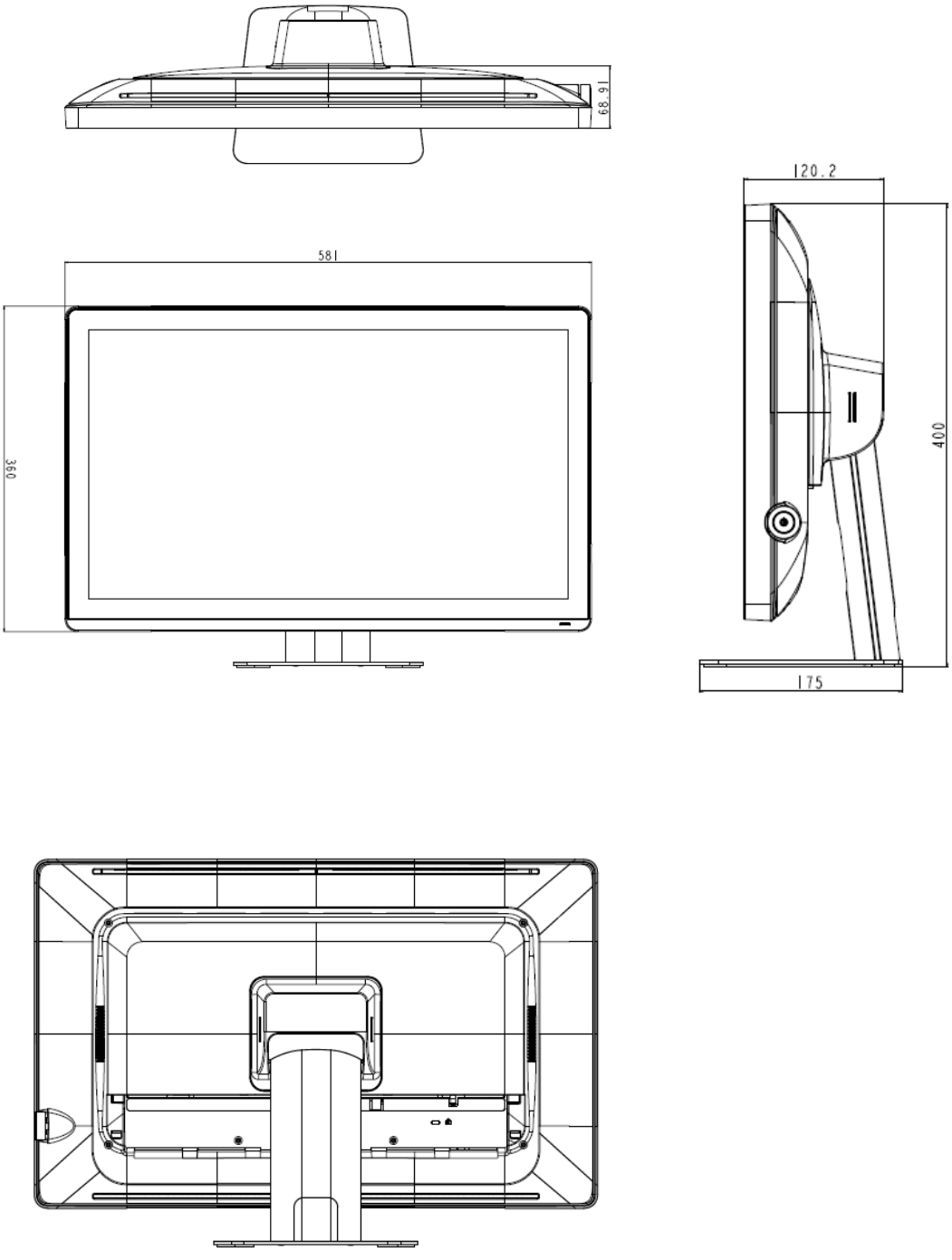

Image 8-1 Outline dimension

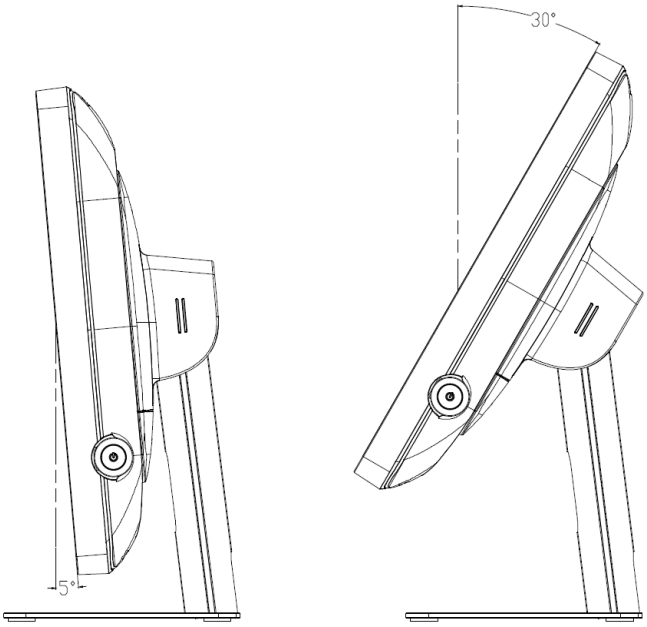

Image 8-2 Outline dimension with monitor tilt -5° & 30° backward

DIVA Laboratories, Ltd.

9F, No.351, Sec.2, Zhongshan Road, Zhonghe District, New Taipei City, 235 Taiwan

Tel: 886-2-22268631

Fax: 886-2-22262423

http://www.diva.com.tw



DIVA RGP2462AMII-PW(AG)_C

User Guide

2025

8ZCDD38581A