

設計驗證
工程課
2025 -03- 12
發行
鈺象科技開發股份有限公司

承　　認　　書

APPROVAL　SHEET

客戶名稱： 鈺緯科技開發股份有限公司

客戶料號： 3DLEDYY076Y (D0173) / 8C.00193.071(#LED YELLOW LTST-C193KSKT-5A)

零件敘述： LED (YELLOW,LTST-C193KSKT-5A,LITEON)

零件料號： LTST-C193KSKT-5A

零件廠牌： LITEON

承認日期： 2025.02.25

客戶認可章	晨昕公司發行章
設計驗證 工程課 2025 -03- 12 發行 鈺緯科技開發股份有限公司	晨昕 發行章

SRT 晨昕科技股份有限公司
SUNRISETEK CO., LTD.

TEL:02-2226-7955　FAX:02-2221-3858

Features



* Meet ROHS, Green Product.
* Extra thin (0.35H mm) Chip LED.
* Package in 8mm tape on 7" diameter reels.
* EIA STD package.
* I.C. compatible.
* Compatible with automatic placement equipment.
* Compatible with infrared and vapor phase reflow solder process.

Package Dimensions

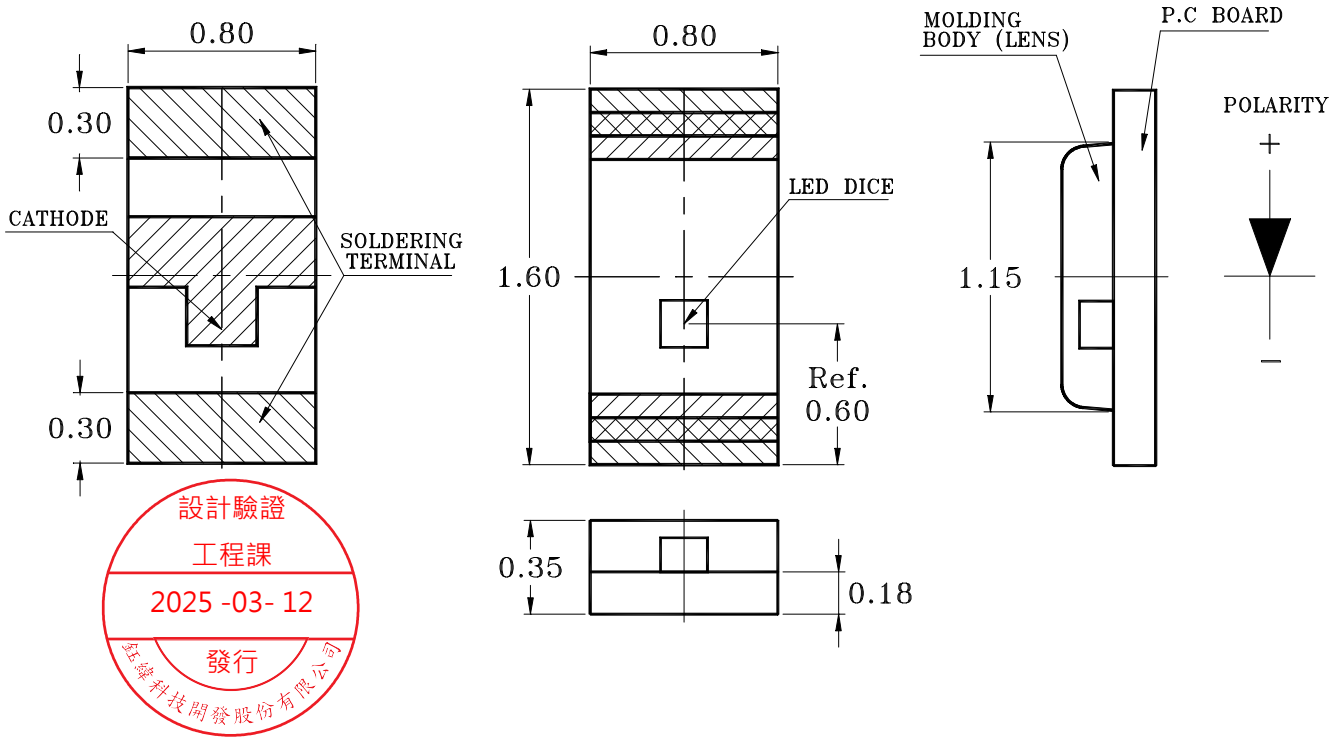

設計驗證
工程課
2025 -03- 12
發行
廷鏵科技開發股份有限公司

Part No.	Lens	Source Color
LTST-C193KSKT-5A	Water Clear	AlInGaP Yellow

Notes:

1. All dimensions are in millimeters (inches).
2. Tolerance is ±0.10 mm (.004") unless otherwise noted.

Absolute Maximum Ratings At Ta=25℃

Parameter	LTST-C193KSKT-5A	Unit
Power Dissipation	75	mW
Peak Forward Current (1/10 Duty Cycle, 0.1ms Pulse Width)	80	mA
DC Forward Current	30	mA
Derating Linear From 25°C	0.4	mA/°C
Reverse Voltage	5	V
Operating Temperature Range	-55°C to + 85°C	
Storage Temperature Range	-55°C to + 85°C	
Wave Soldering Condition	260°C For 5 Seconds	
Infrared Soldering Condition	260°C For 5 Seconds	
Vapor Phase Soldering Condition	215°C For 3 Minutes	

*** Suggestion Profile:**

(1) Suggestion IR Reflow Profile For Normal Process

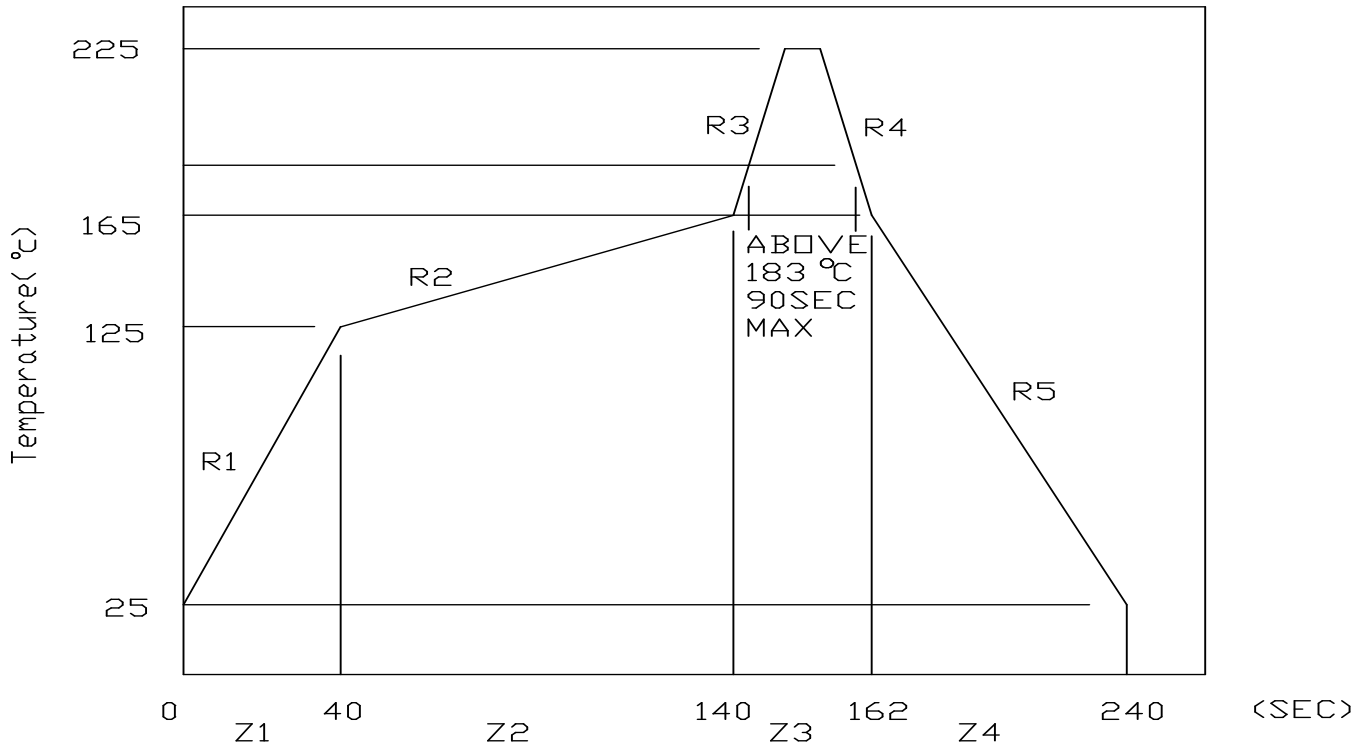

(2) Suggestion IR Reflow Profile For Pb Free Process

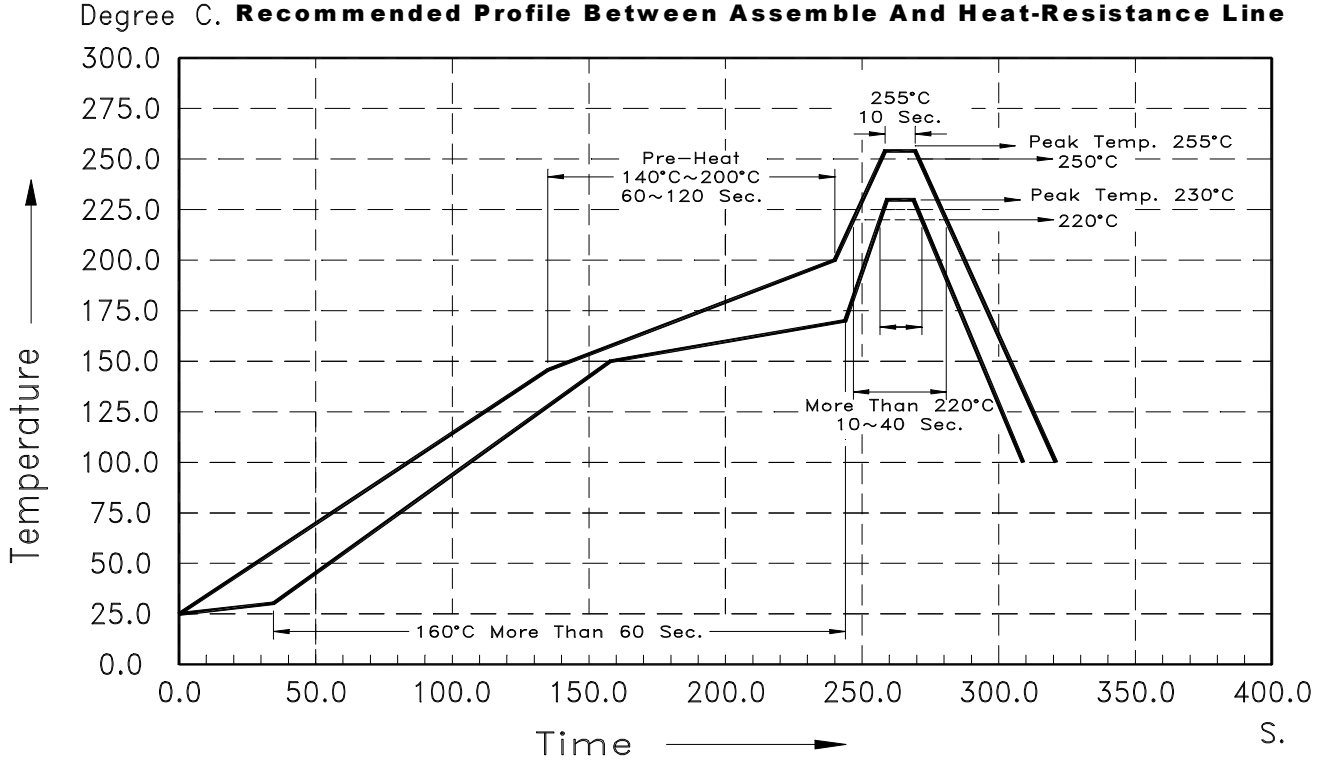

The Profile is available that must to use SnAg $_{(x=3.3\sim3.8)}$ Cu $_{(y=0.2\sim0.7)}$ solder paste

Electrical Optical Characteristics At Ta= 25℃

Parameter	Symbol	Part No. LTST-	Min.	Typ.	Max.	Unit	Test Condition
Luminous Intensity	IV	C193KSKT-5A	7.1	-	45.0	mcd	IF = 5mA Note 1
Viewing Angle	2θ 1/2	C193KSKT-5A		130		deg	Note 2 (Fig.6)
Peak Emission Wavelength	λ P	C193KSKT-5A		591		nm	Measurement @Peak (Fig.1)
Dominant Wavelength	λ d	C193KSKT-5A	587.0	-	594.5	nm	IF = 5mA Note 3
Spectral Line Half-Width	Δ λ	C193KSKT-5A		15		nm	
Forward Voltage	VF	C193KSKT-5A	1.7	-	2.3	V	IF = 5mA
Reverse Current	IR	C193KSKT-5A			10	μA	VR = 5V
Capacitance	C	C193KSKT-5A		40		PF	VF = 0 f = 1MHZ

Notes: 1. Luminous intensity is measured with a light sensor and filter combination that approximates the CIE eye-response curve.

2. θ 1/2 is the off-axis angle at which the luminous intensity is half the axial luminous intensity.

3. The dominant wavelength, λ d is derived from the CIE chromaticity diagram and represents the single wavelength which defines the color of the device.

4. Caution in ESD:

Static Electricity and surge damages the LED. It is recommend to use a wrist band or anti-electrostatic glove when handling the LED. All devices, equipment and machinery must be properly grounded.

Bin Code List

Forward Voltage	Unit: V @5mA	
Bin Code	Min.	Max.
E2	1.70	1.90
E3	1.90	2.10
E4	2.10	2.30

Tolerance on each Forward Voltage bin is +/-0.1 volt

Luminous Intensity	Unit : mcd @5mA	
Bin Code	Min.	Max.
K	7.10	11.20
L	11.20	18.00
M	18.00	28.00
N	28.00	45.00

Tolerance on each Intensity bin is +/-15%

Dominant Wavelength	Unit : nm @5mA	
Bin Code	Min.	Max.
J	587.00	589.50
K	589.50	592.00
L	592.00	594.50

Tolerance for each Dominate Wavelength bin is +/- 1nm

Typical Electrical / Optical Characteristics Curves

(25 °C Ambient Temperature Unless Otherwise Noted)

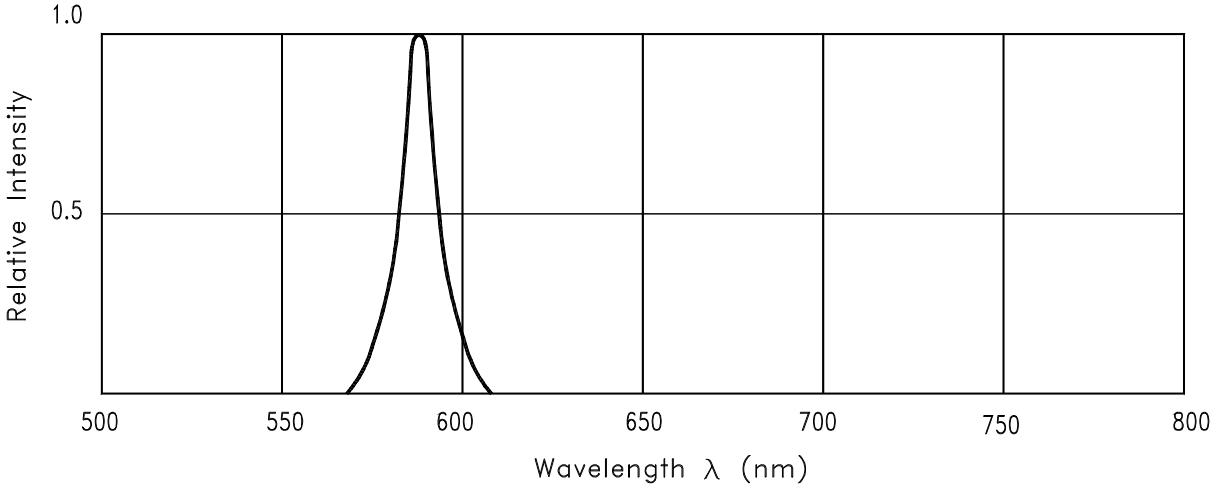

Fig.1 RELATIVE INTENSITY VS. WAVELENGTH

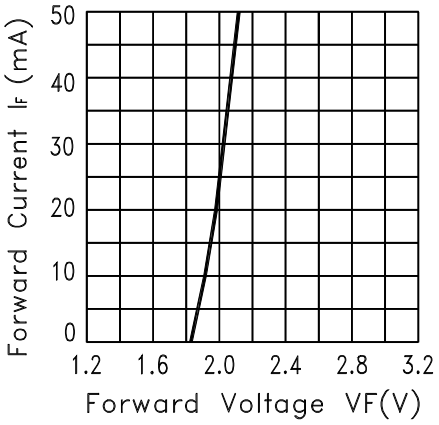

Fig.2 FORWARD CURRENT VS. FORWARD VOLTAGE

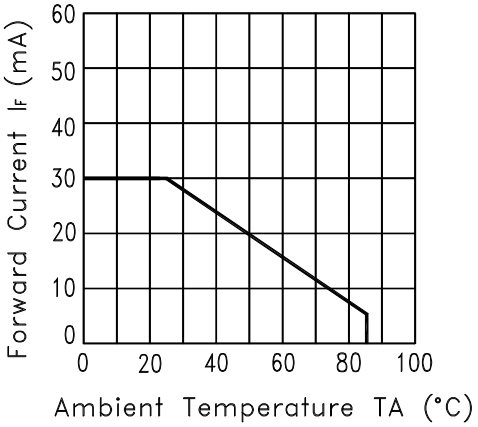

Fig.3 FORWARD CURRENT DERATING CURVE

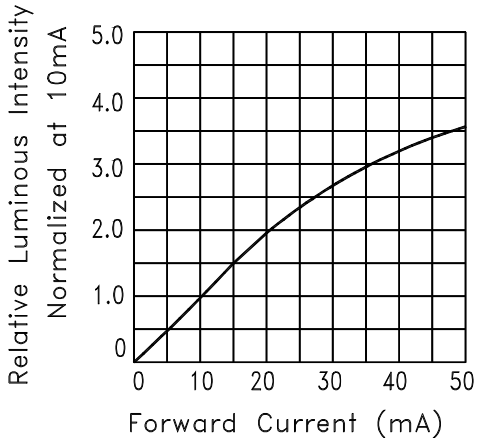

Fig.4 RELATIVE LUMINOUS INTENSITY VS. FORWARD CURRENT

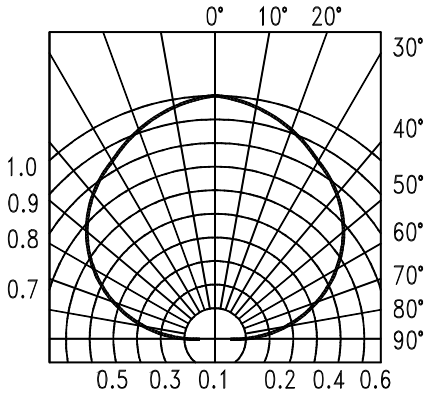

Fig.6 SPATIAL DISTRIBUTION

Cleaning

Do not use unspecified chemical liquid to clean LED they could harm the package.
If clean is necessary, immerse the LED in ethyl alcohol or in isopropyl alcohol at normal temperature for less one minute.

Suggest Soldering Pad Dimensions

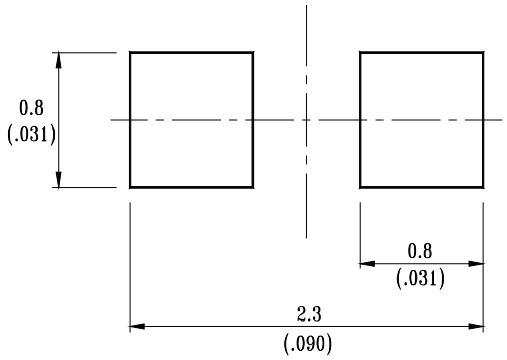

Notes:
1. Suggest stencil thickness is maximum 0.10mm.

Package Dimensions Of Tape And Reel

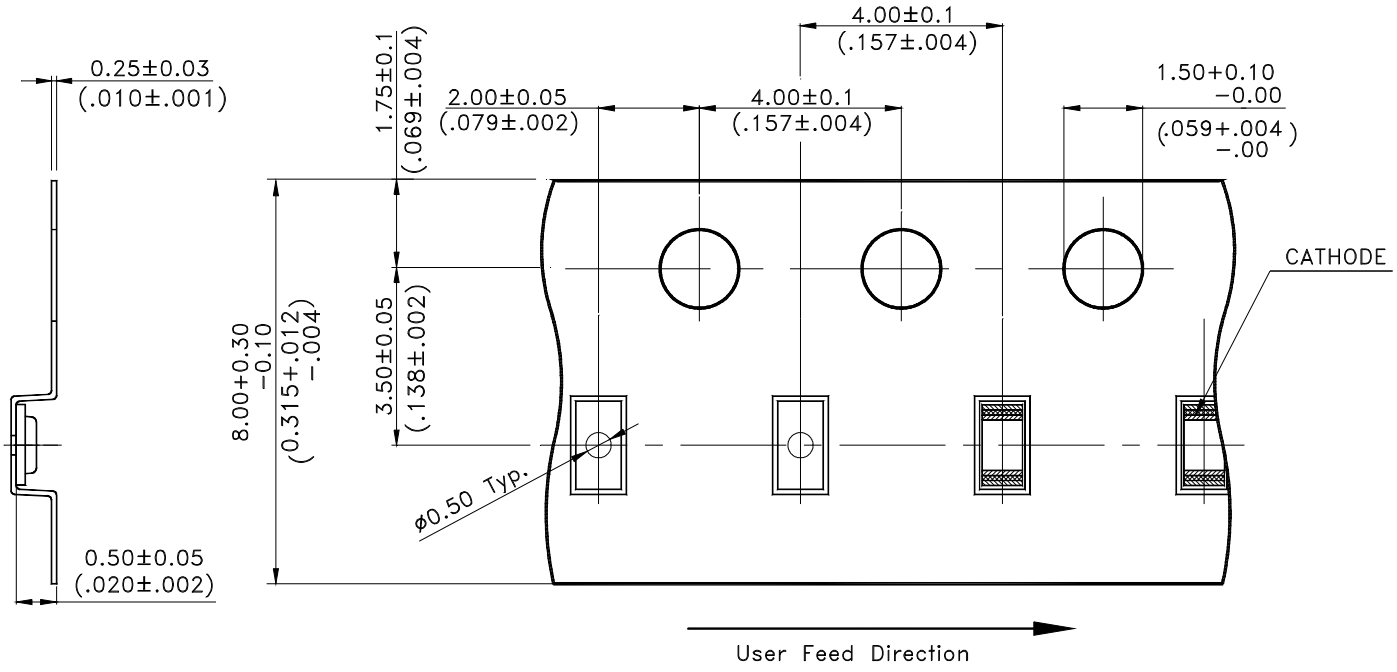

Notes:

1. All dimensions are in millimeters (inches).

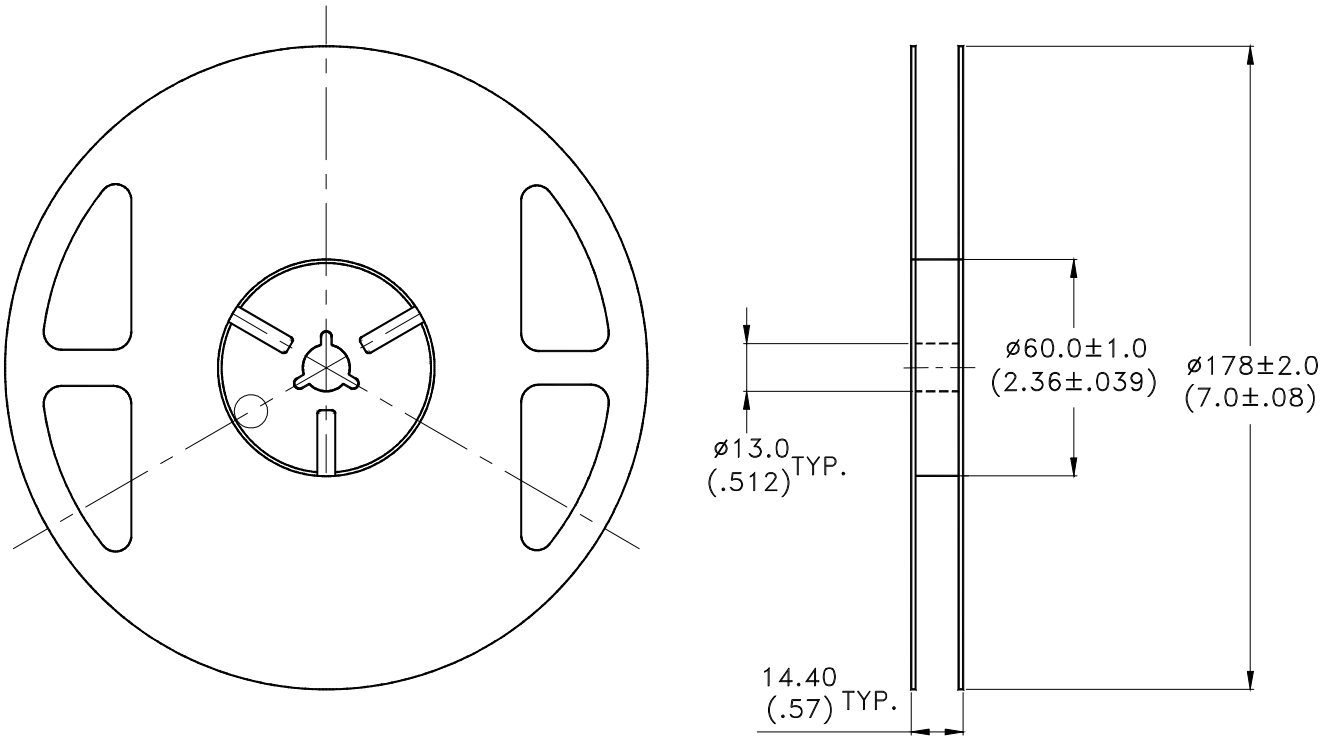

Notes:

1. Empty component pockets sealed with top cover tape.
2. 7 inch reel-3000 pieces per reel.
3. Minimum packing quantity is 500 pcs for remainders.
4. The maximum number of consecutive missing lamps is two.
5. In accordance with ANSI/EIA 481-1-A-1994 specifications.

CAUTIONS

1. Application

The LEDs described here are intended to be used for ordinary electronic equipment (such as office equipment, communication equipment and household applications).Consult Liteon's Sales in advance for information on applications in which exceptional reliability is required, particularly when the failure or malfunction of the LEDs may directly jeopardize life or health (such as in aviation, transportation, traffic control equipment, medical and life support systems and safety devices).

2. Storage

The storage ambient for the LEDs should not exceed 30°C temperature or 70% relative humidity.
It is recommended that LEDs out of their original packaging are IR-reflowed within one week.
For extended storage out of their original packaging, it is recommended that the LEDs be stored in a sealed container with appropriate desiccant, or in a desiccators with nitrogen ambient.
LEDs stored out of their original packaging for more than a week should be baked at about 60 deg C for at least 24 hours before solder assembly.

3. Cleaning

Use alcohol-based cleaning solvents such as isopropyl alcohol to clean the LED if necessary.

4. Soldering

Recommended soldering conditions:

Reflow soldering		Wave Soldering		Soldering iron	
Pre-heat	120~150°C	Pre-heat	100°C Max.	Temperature	300°C Max.
Pre-heat time	120 sec. Max.	Pre-heat time	60 sec. Max.	Soldering time	3 sec. Max.
Peak temperature	260°C Max.	Solder wave	260°C Max.		(one time only)
Soldering time	5 sec. Max.	Soldering time	10 sec. Max.		

5. Drive Method

An LED is a current-operated device. In order to ensure intensity uniformity on multiple LEDs connected in parallel in an application, it is recommended that a current limiting resistor be incorporated in the drive circuit, in series with each LED as shown in Circuit A below.

Circuit model A

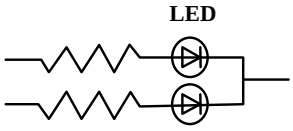

Circuit model B

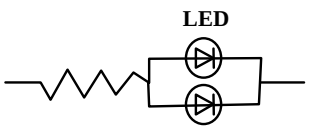

(A) Recommended circuit.
(B) The brightness of each LED might appear different due to the differences in the I-V characteristics of those LEDs.

6. ESD (Electrostatic Discharge)

Static Electricity or power surge will damage the LED.
Suggestions to prevent ESD damage:

- Use of a conductive wrist band or anti-electrostatic glove when handling these LEDs.
- All devices, equipment, and machinery must be properly grounded.
- Work tables, storage racks, etc. should be properly grounded.
- Use ion blower to neutralize the static charge which might have built up on surface of the LED's plastic lens as a result of friction between LEDs during storage and handling.

ESD-damaged LEDs will exhibit abnormal characteristics such as high reverse leakage current, low forward voltage, or " no lightup " at low currents.
To verify for ESD damage, check for " lightup " and Vf of the suspect LEDs at low currents.
The Vf of " good " LEDs should be >2.0V@0.1mA for InGaN product and >1.4V@0.1mA for AlInGaP product.

7. Reliability Test

Classification	Test Item	Test Condition	Reference Standard
Endurance Test	Operation Life	Ta= Under Room Temperature As Per Data Sheet Maximum Rating *Test Time= 1000HRS (-24HRS,+72HRS)*@20mA.	MIL-STD-750D:1026 MIL-STD-883D:1005 JIS C 7021:B-1
	High Temperature High Humidity Storage	IR-Reflow In-Board, 2 Times Ta= 65±5℃,RH= 90～95% *Test Time= 240HRS±2HRS	MIL-STD-202F:103B JIS C 7021:B-11
	High Temperature Storage	Ta= 105±5℃ *Test Time= 1000HRS (-24HRS,+72HRS)	MIL-STD-883D:1008 JIS C 7021:B-10
	Low Temperature Storage	Ta= -55±5℃ *Test Time=1000HRS (-24HRS,+72H RS)	JIS C 7021:B-12
Environmental Test	Temperature Cycling	105℃ ～ 25℃ ～ -55℃ ～ 25℃ 30mins 5mins 30mins 5mins 10 Cycles	MIL-STD-202F:107D MIL-STD-750D:1051 MIL-STD-883D:1010 JIS C 7021:A-4
	Thermal Shock	IR-Reflow In-Board, 2 Times 85 ± 5℃ ～ -40℃ ± 5℃ 10mins 10mins 10 Cycles	MIL-STD-202F:107D MIL-STD-750D:1051 MIL-STD-883D:1011
	Solder Resistance	T.sol= 260 ± 5℃ Dwell Time= 10 ± 1secs	MIL-STD-202F:210A MIL-STD-750D:2031 JIS C 7021:A-1
	IR-Reflow Normal Process	Ramp-up rate(183℃ to Peak) +3℃/ second max Temp. maintain at 125(±25)℃ 120 seconds max Temp. maintain above 183℃ 60-150 seconds Peak temperature range 235℃+5/-0℃ Time within 5°C of actual Peak Temperature (tp) 10-30 seconds Ramp-down rate +6℃/second max	MIL-STD-750D:2031.2 J-STD-020C
	IR-Reflow Pb Free Process	Ramp-up rate(217℃ to Peak) +3℃/ second max Temp. maintain at 175(±25)℃ 180 seconds max Temp. maintain above 217℃ 60-150 seconds Peak temperature range 260℃+0/-5℃ Time within 5°C of actual Peak Temperature (tp) 20-40 seconds Ramp-down rate +6℃/second max	MIL-STD-750D:2031.2 J-STD-020C
	Solderability	T.sol= 235 ± 5℃ Immersion time 2±0.5 sec Immersion rate 25±2.5 mm/sec Coverage ≧95% of the dipped surface	MIL-STD-202F:208D MIL-STD-750D:2026 MIL-STD-883D:2003 IEC 68 Part 2-20 JIS C 7021:A-2

8. Others

The appearance and specifications of the product may be modified for improvement without prior notice.

9. Suggested Checking List

Training and Certification

1. Everyone working in a static-safe area is ESD-certified?
2. Training records kept and re-certification dates monitored?

Static-Safe Workstation & Work Areas

1. Static-safe workstation or work-areas have ESD signs?
2. All surfaces and objects at all static-safe workstation and within 1 ft measure less than 100V?
3. All ionizer activated, positioned towards the units?
4. Each work surface mats grounding is good?

Personnel Grounding

1. Every person (including visitors) handling ESD sensitive (ESDS) items wears wrist strap, heel strap or conductive shoes with conductive flooring?
2. If conductive footwear used, conductive flooring also present where operator stand or walk?
3. Garments, hairs or anything closer than 1 ft to ESD items measure less than 100V*?
4. Every wrist strap or heel strap/conductive shoes checked daily and result recorded for all DLs?
5. All wrist strap or heel strap checkers calibration up to date?
   Note: *50V for Blue LED.

Device Handling

1. Every ESDS items identified by EIA-471 labels on item or packaging?
2. All ESDS items completely inside properly closed static-shielding containers when not at static-safe workstation?
3. No static charge generators (e.g. plastics) inside shielding containers with ESDS items?
4. All flexible conductive and dissipative package materials inspected before reuse or recycles?

Others

1. Audit result reported to entity ESD control coordinator?
2. Corrective action from previous audits completed?
3. Are audit records complete and on file?

Mouser Electronics

Authorized Distributor

Click to View Pricing, Inventory, Delivery & Lifecycle Information:

Lite-On:
LTST-C193KSKT-5A