REV.	DATE	DESCRIPTION	BY	APVD
-	2023-04-25	FIRST RELEASE		

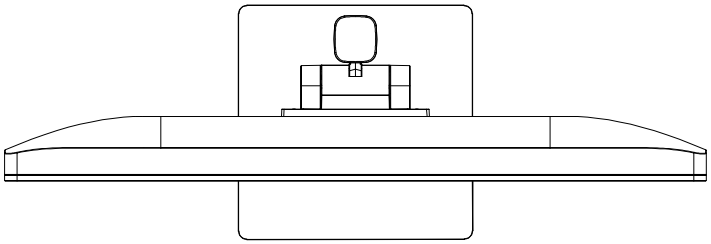

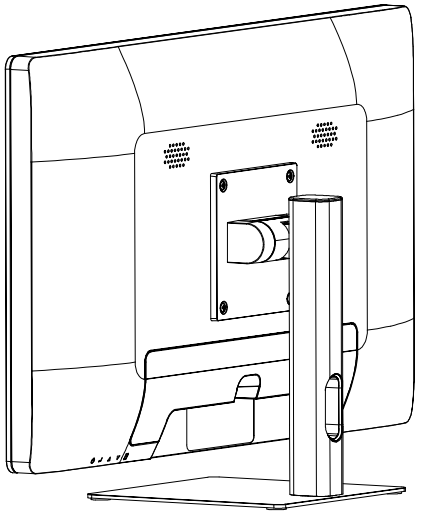

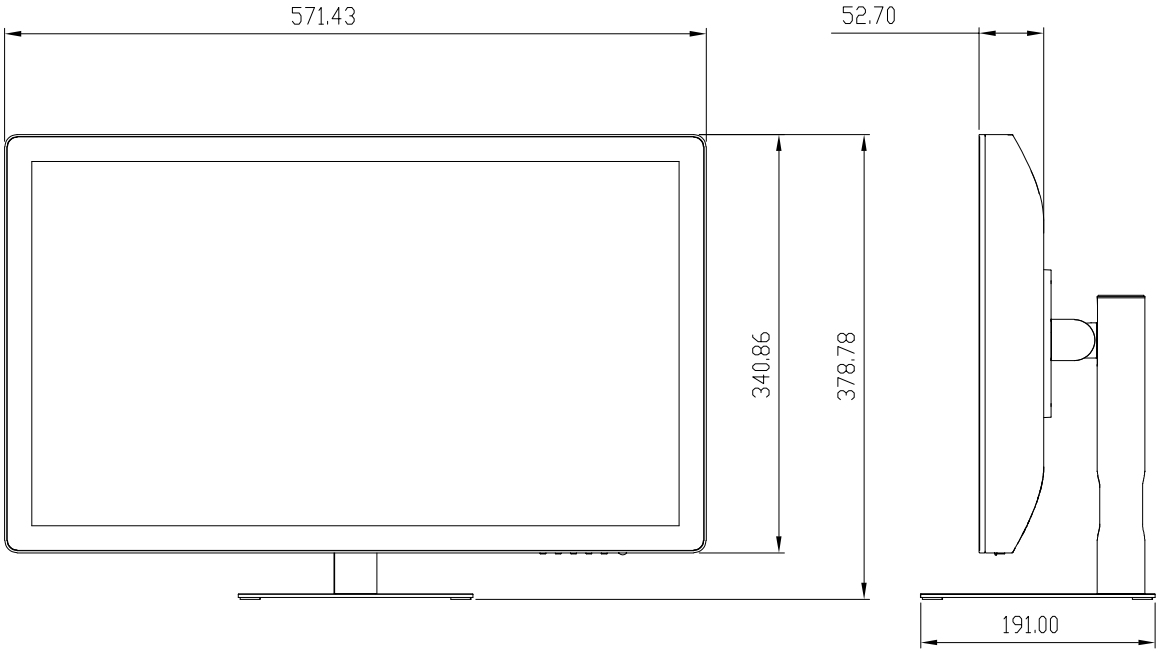

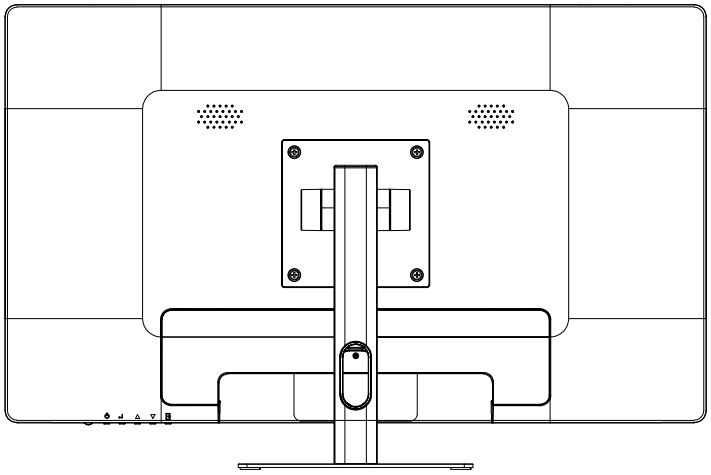

RANGE OF DIMENSION	TOLERANCE CLASS DESIGNATION		
		V	
	fine	medium	course
UP TO 3	±0.05	±0.1	±0.2
OVER 3-6	±0.05	±0.1	±0.3
OVER 6-30	±0.1	±0.2	±0.5
OVER 30-120	±0.15	±0.3	±0.8
OVER 120-400	±0.2	±0.5	±1.2
OVER 400-1000	±0.3	±0.8	±2.0
OVER 1000-2000	±0.5	±1.2	±3.0
OVER 2000-4000	-	±2.0	±8.0
ANGLE ±1° (±1.75/100)			

THIRD ANGLE PROJECTION

UNITS: mm	SCALE: 1/1	SHEET: 1 OF 1	MODEL NO.:
MATERIAL:		TREATMENT:	
DSGD by	2023-04-25	PART NAME:	
CHK by		DIVA P/N:	
APVD by		Qisda NO.:	
APVD NO.:	3D FILE NAME: RENDER	DIVA Laboratories ,Ltd.	