





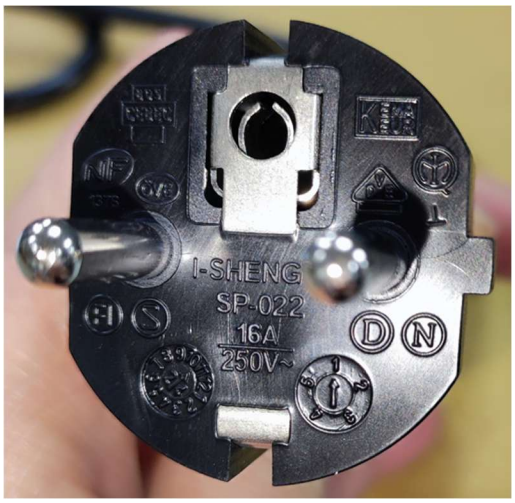

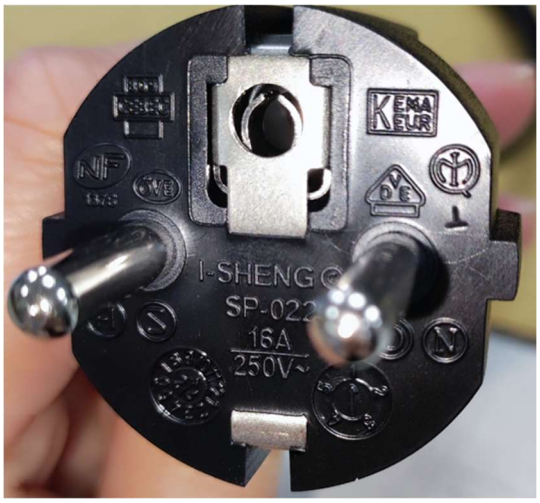

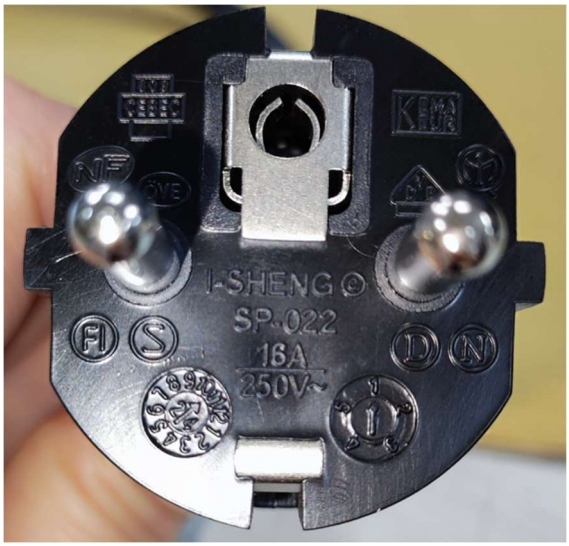

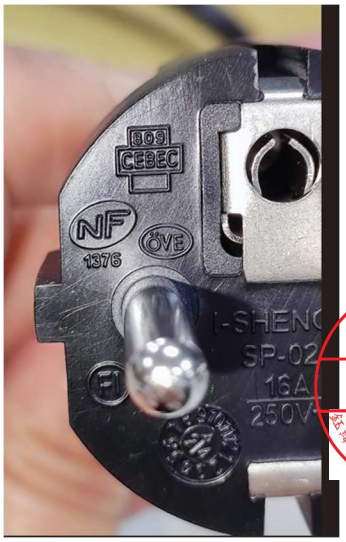

設計驗證
工程課
2025 -04- 09
發行

鎰勝工業股份有限公司

I-SHENG ELECTRIC WIRE & CABLE CO., LTD.

APPROVAL SHEET

客戶 CUSTOMER	鈺緯
品名 STYLE NAME	POWER SUPPLY CORD
規格 MODEL NO.	SP-022+IS-14N H05VV-F 3G 1.0mm² N.M. 凹字 CT-12(BLACK) 2000mm
客戶料號 PART NO.	3ZTTK000860 (ZT007)

鎰勝料號 IS PART NO.	發行日期 ISSUED DATE	版本 VERSION
TB6JC3E4N1220001	2024/12/4	A01

☐ 鎰勝工業股份有限公司 I-SHENG ELECTRIC WIRE & CABLE CO., LTD.
台灣省桃園市龜山區大崗里頂湖路 50 號
50, Tin Hwu Road, Ta Gann Village, Gwai San Hsian, Tao Yuan Hsien, Taiwan 33378
TEL:886-3-3282391 FAX:886-3-3284228

■ 鎰勝電子(深圳)有限公司 I-SHENG MANUFACTURING(SONG GANG)FACTORY
廣東省深圳市寶安區松崗街道塘下涌大道旁第一幢
Building 1, TangXiaYong Street, Songgang Town, Bao'An District, Shenzhen, Guangdong, China 518105
TEL:86-755-33876988 FAX:86-755-33876800

■ 鎰勝電子科技(昆山)有限公司 I-SHENG ELECTRONICS (KUNSHAN) CO., LTD.
江蘇省昆山市經濟技術開發區泰山路 888 號
No. 888 Tai Shan Road, Kunshan Development Zone, Kun Shan City, Jiang Su Province, China 215300
TEL:86-512-57386890 FAX:86-512-57386891

■ 鎰勝工業(越南)有限公司 I-SHENG ELECTRIC WIRE & CABLE (VIETNAM)
越南北寧省北寧市雲陽坊桂武工業區
Que Vo I.P, Van Duong ward, Bac Ninh city, Bac Ninh province, Vietnam 0222
TEL: 84-222-3634237 FAX: 84-222-3634436

Approved by	Checked by	Prepared by	Customer Approval
陳永鎮	劉宗科	洪素婉	設計驗證 工程課 2025 -04- 09 發行 鎰勝科技開發股份有限公司

◎◎◎◎◎ Please sign back this cover page after your approval ◎◎◎◎◎

I-SHENG ELECTRIC WIRE & CABLE CO., LTD.

工程變更通知單(ECN)

日期 Date: 2024/12/4		ECN No: 24ECNA23
變更機種(model change): France type Europe type	變更原因(change reasons): ☐ 降低成本(cost down) ■ 製程需要(production process) ■ 規格變更(spec revised)	☐ 客戶需求 (customer requirement) ■ 安規變更 (Safety change) ☐ 更換材料(material change) ☐ 其他(other)：
客戶(Customer)： 鈺緯	變更內容(change content):	1. Alter the logo of NF 2. Connector IS-14N instead of IS-14 3. Connector IS-033C instead of IS-033 4. Alter connector's mark to ENEC 5. Alter cable's marking
影響料號 (Effected model list):	庫存 (In stock)	
3KP00000120 3ZTTK000860	鈺緯 23+14 H05 0.75/3C 1.83M 鈺緯 22+14 H05 1.0/3C N.M. 2M	

變更原因(change reason)

1. LCIE requires each certified product to use the logo of the new NF mark.
   法國安規機構要求刻字需使用新版法國logo

2. We would like to produce IS-14N to replace IS-14 and IS-033C to replace IS-033.
   我司計畫生產IS-14N來取代IS-14；IS-033C取代IS-033。

2. Power cord set for many countries the plug is mandatory, the connector and cables accept EU approval.
   很多國家的電源線組只有插頭是強制認證，連接器及電線可使用歐規認證。

3. Many customers have already accepted the ENEC mark, so we would like to uniformly produce EU connector with the ENEC mark instead of other marks in the future. The certificates that have expired will not be extended.
   許多客戶已經接受ENEC標誌，因此我們決定在未來統一生產帶有ENEC標誌的歐規尾插，而不是其他標誌。到期的歐規證書也將不再延展。

4. We plan to produce new NF mark from January 1, 2026. Product inventory valid (in I-SHENG or at the customer) can be imported.
   我司預計 2026/1/1 起一律生產新刻字，已生產完成的產品庫存(在 I-SHENG 或在客戶)都可以進口。

5. All the cable marking for Europe plug shall not combine with China and Australia safety mark anymore.
   所有歐規產品之線材將不再合併中規與澳規印字內容。

變更前(Before change)	變更後(After change)
SP-023 歐 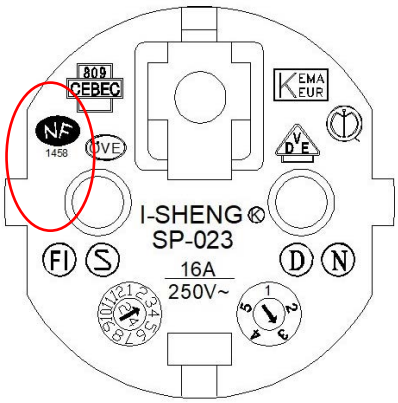	SP-023 歐 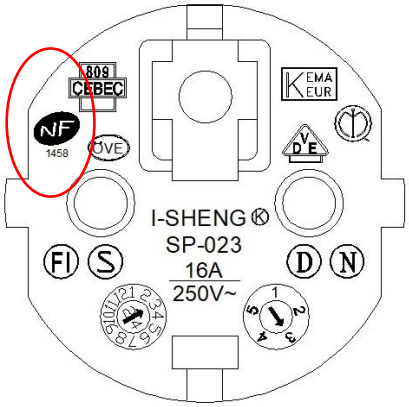
SP-022 歐 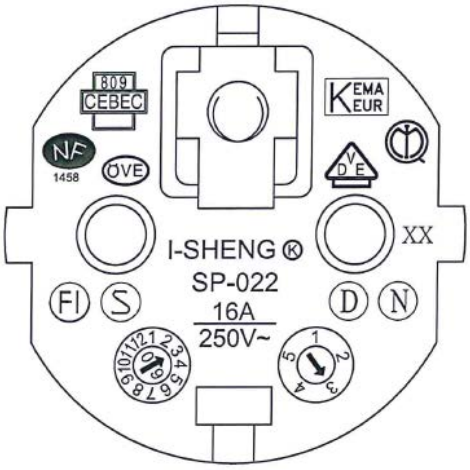	SP-022 歐 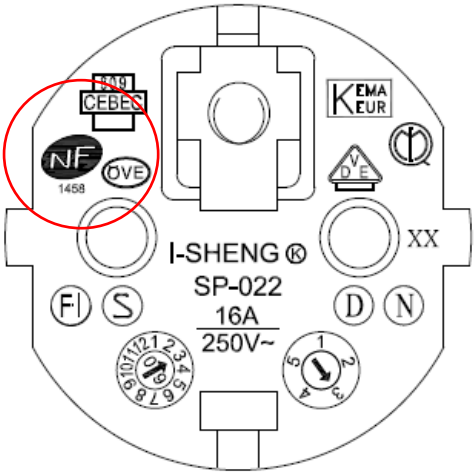
IS-14 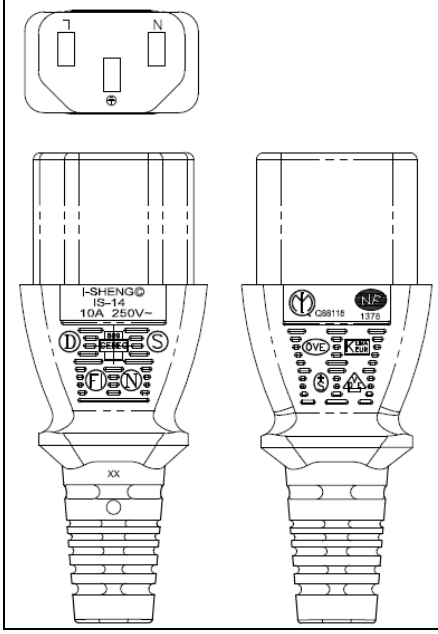	IS-14N 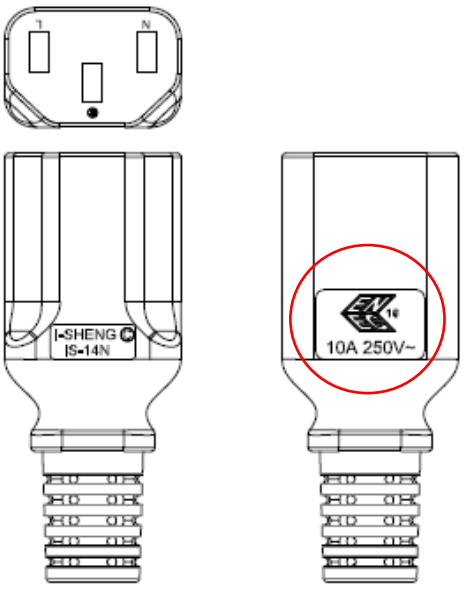

IS-14	IS-14N
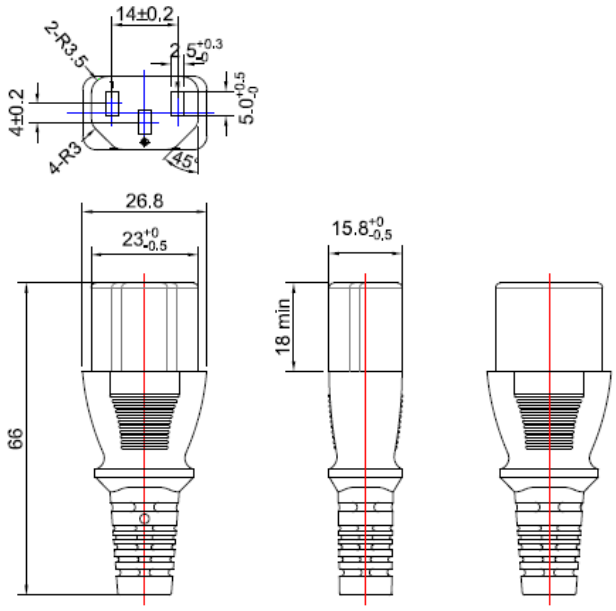	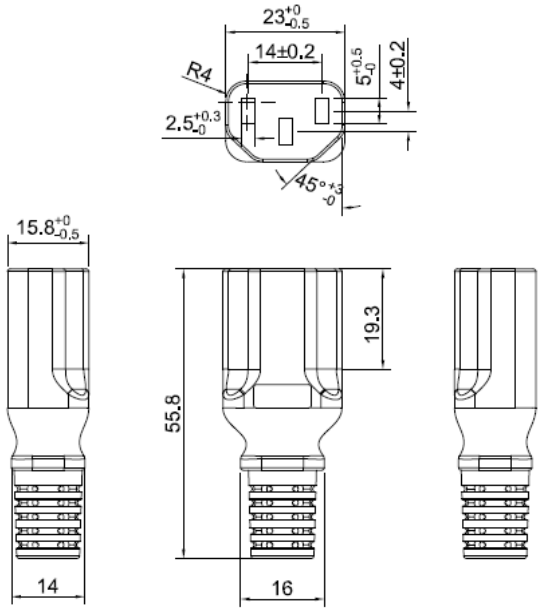
H05VV-F 3G 0.75m ㎡ I-SHENG SGIS ◁ VDE ▷ KEMA-KEUR ◁Ö VE ▷ △CEBEC 809 Ⓢ Ⓓ Ⓝ Ⓕ NF-USE 1346 IEMMEQU H05VV-F 3G 0.75m ㎡ 60227 IEC 53 RVV 300/500V A003083 3ASL/75 4V-75 V-75(75℃) 250/440V ORDINARY DUTY Q88228 -LF- CE	H05VV-F 3G 0.75m ㎡ I-SHENG SGIS ◁ VDE ▷ KEMA-KEUR ◁Ö VE ▷ △CEBEC 809 Ⓢ Ⓓ Ⓝ Ⓕ NF-USE 1346 IEMMEQU H05VV-F 3G 0.75m ㎡ 300/500V -LF- CE

Factory identification

Shenzhen Factory : Ⓒ SGIS NF-USE 1346

Kunshan Factory : Ⓚ KSIS NF-USE 1353

Vietnam Factory : Ⓥ VHIS NF-USE 29054

預定實施日期(Effectuated date)：	客戶確認(Customer approval)
January 1, 2026	

Approved by	Checked by	Prepared by
Tsen Chen	TK Liu	Vivian Hung

FORM:I109b

NO.	BOM ITEM	QUANTITY	PART NO.
1	SP-023 固定座	1 PCS	MB023012
2	PVC 50P (SP-022) CT-12	29 g	RPP05012
3	IS-14N 銅片	3 PCS	BBB14N00
4	IS-14N 內模套	1 PCS	MI14N000
5	PVC 50P (IS-14N) CT-12	14 g	RPP05012

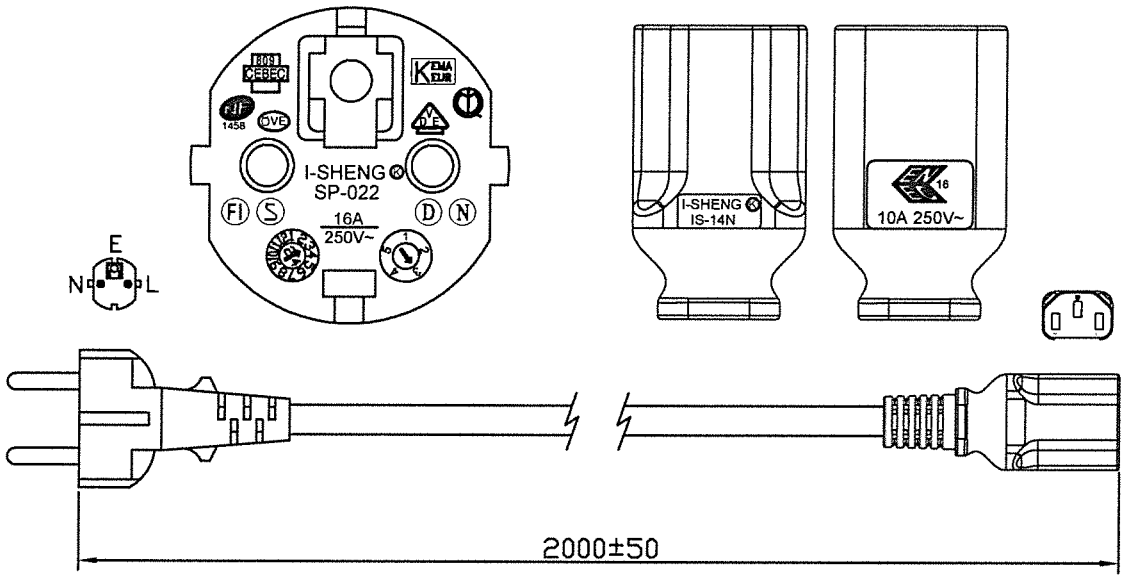

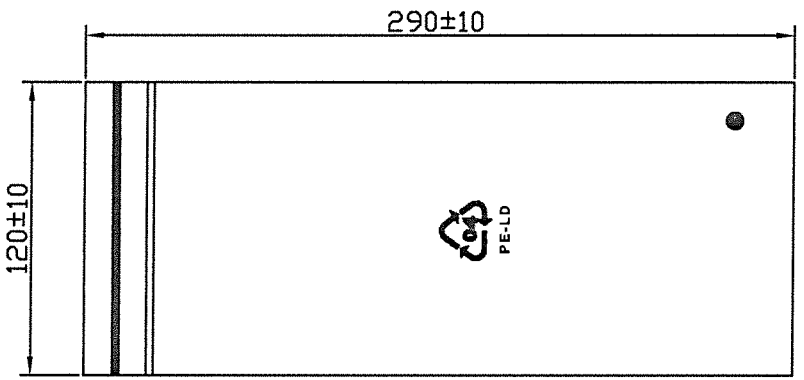

環保袋 (PE BAG)

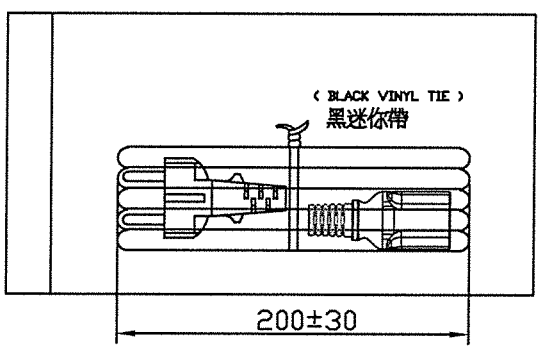

設計驗證
工程課
2025 -04- 09
發行
鈺緯科技開發股份有限公司

MANUFACTURER	☐ TWIS ☐ SGIS ☐ KSIS			
CORD	H05VV-F 3G 1.0 N.M. 凹字 CT-12(BLACK)			
PLUG	SP-022 + IS-14N	WIRE LENGTH	2000	
CUSTOMER NAME	鈺緯 (ZT007)	UNIT	mm	REV.
CUSTOMER PART NO	3ZTTK000860	DWG. NO.	S113281-2	A

I-SHENG ELECTRIC WIRE & CABLE CO.,LTD.
鎰勝工業股份有限公司

DESIGN BY	洪素婉2024.11.18
REVIEW BY	
APPROVE BY	陳永鎮2024.11.18

TB6 JC3E4N 12 200 01

WIRING COLOR:
E: Yellow/Green 黃/綠
N: Blue 藍
L: Brown 棕

線材印字:
N.M. I-SHENG KSIS ◁VDE▷ KEMA-KEUR ◁VE▷ △ CEBEC 809
Ⓢ Ⓓ Ⓝ Ⓕ NF-USE 1353 IEMMEQU H05VV-F 3G 1.0mm² 300/500V -LF- CE

FORM:I101c

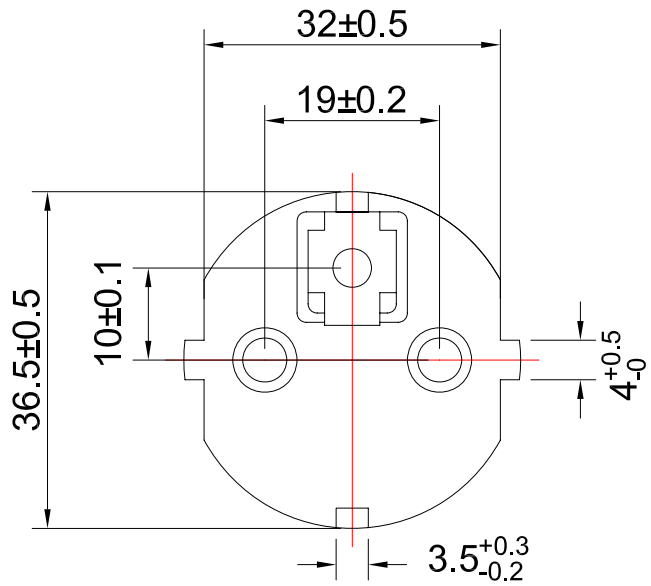

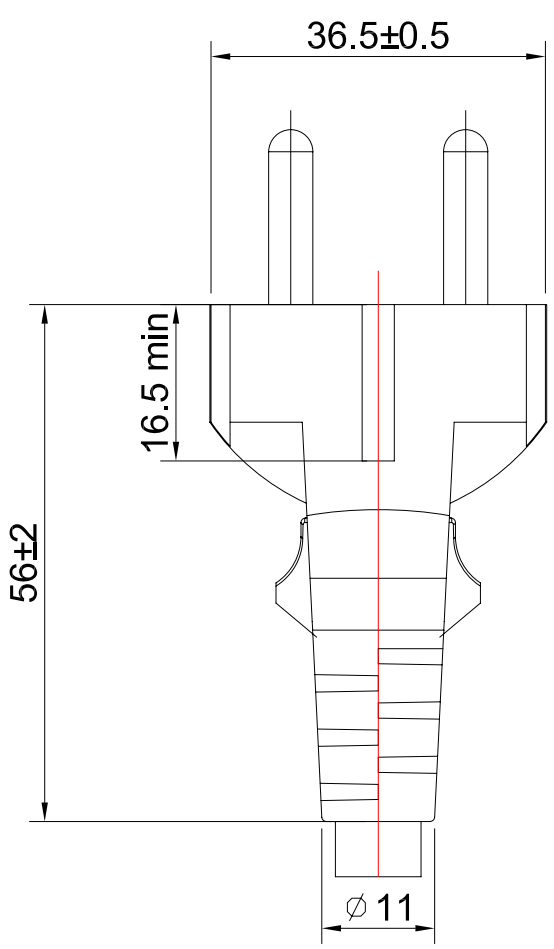

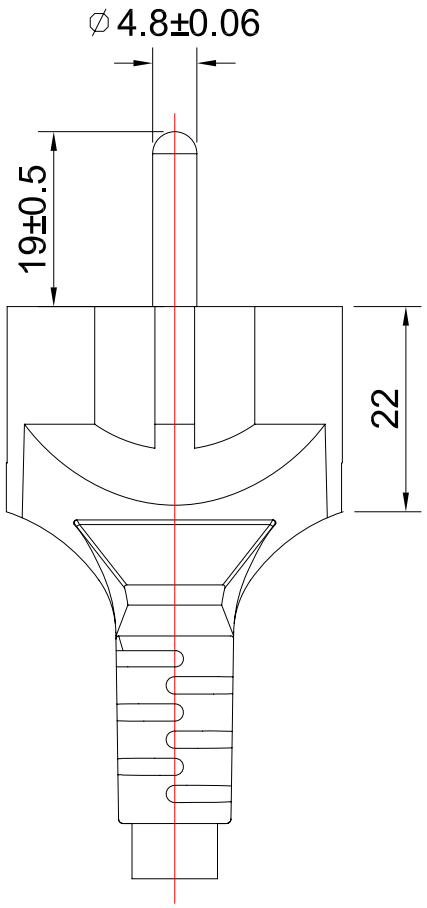

DWG. NAME	TYPE AND DIMENSIONS		
APPLY TO STANDARD	EUROPE APPROVAL POWER SUPPLY CORD		
ISSUE DATE	2000/03/13	REV.	D
REVISE DATE	2008/08/13	UNIT	mm
TYPE	SP-022	DWG. NO.	A22-01
WIRE	H05VV-F (0.75~1.0/3),H03VV-F (0.75/3)		
I-SHENG ELECTRIC WIRE & CABLE CO.,LTD. 鎰勝工業股份有限公司		DESIGN BY	FANNY WANG
		REVIEW BY	BECKY CHEN
		APPROVE BY	RYAN LAI

TOLERANCE	
≤ 1.0	±0.3
≤ 10.0	±0.5
≤ 20.0	±1.0
> 20.0	±2.0

FORM : I106a

MARKING

發行 ISSUED 2024.7.15	標 準 名 稱 STD. NAME	EUPOPE APPROVAL POWER SUPPLY CORD	編號 FILE NO. A22-01-1
修訂 REVISED B	品 名 CAT NO.	SP-022 成品標識示意圖	頁次 PAGE 1

SHENZHEN FACTORY： NF 1376

KUNSHAN FACTORY： NF 1458

VIETNAM FACTORY： NF 1786

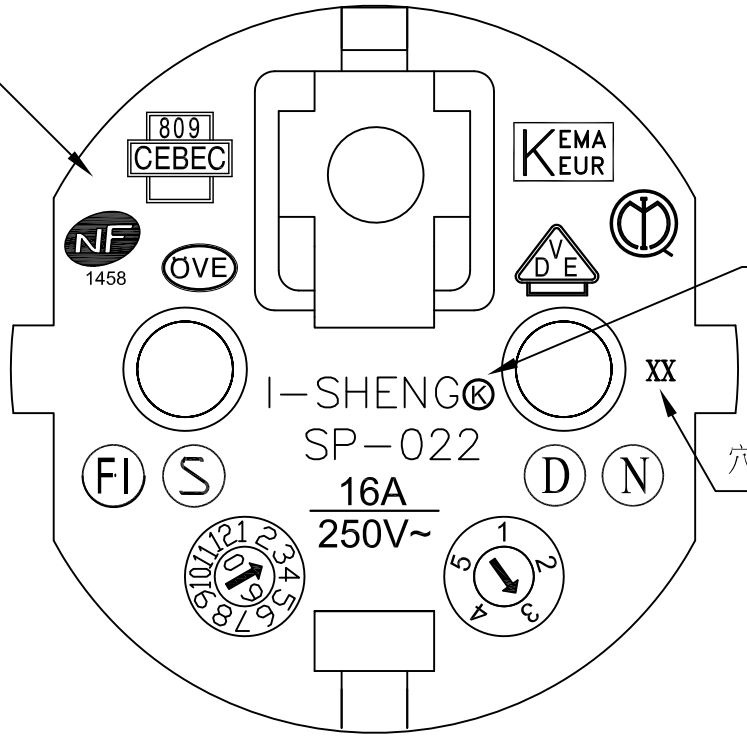

SHENZHEN FACTORY： Ⓒ

KUNSHAN FACTORY： Ⓚ

VIETNAM FACTORY： Ⓥ

XX 穴號(將有1 ~3位數)，位置不固定

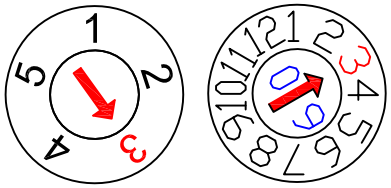

09 means years.
the text of red color means in the third week March.

I-SHENG ELECTRIC WIRE & CABLE CO.,LTD.	製圖	洪素婉	審查	劉宗科	核准	陳永鎮

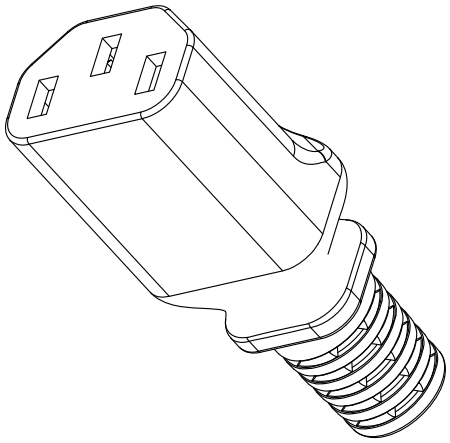

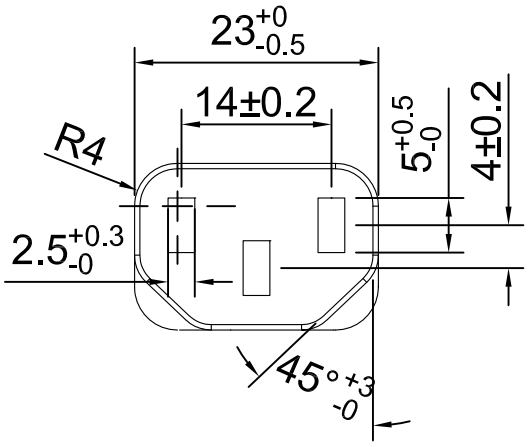

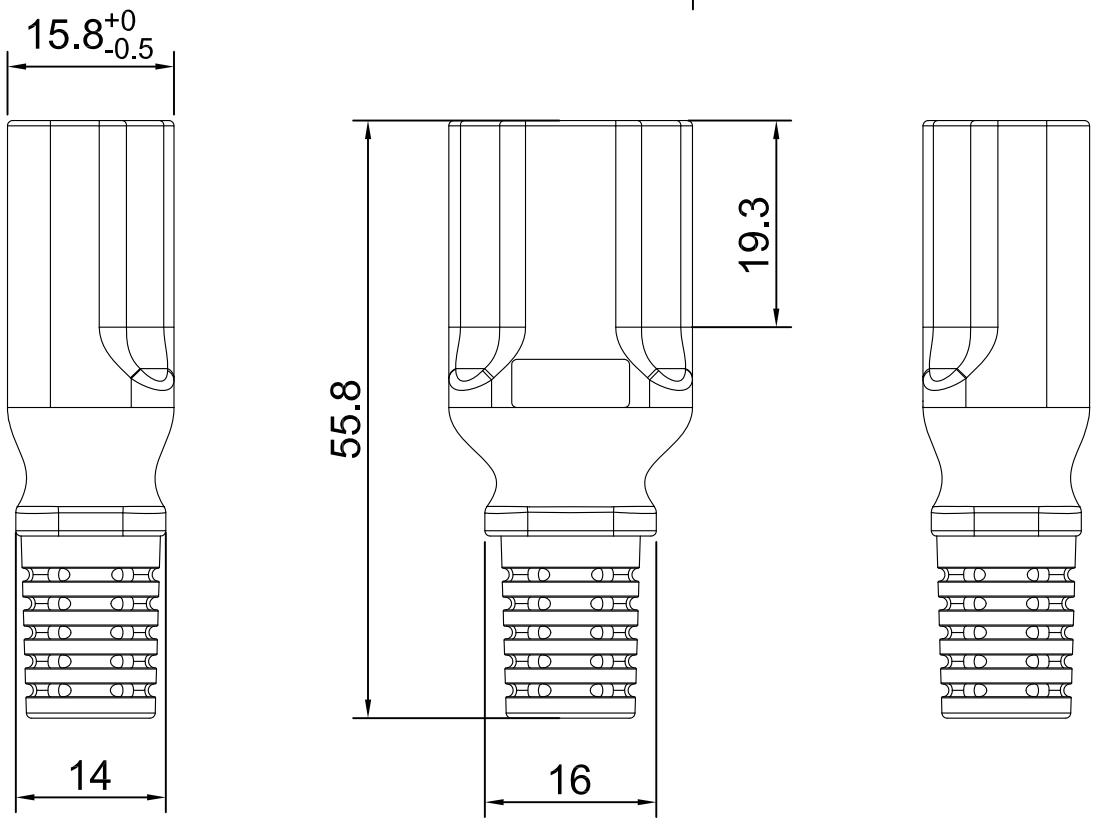

DWG. NAME	TYPE AND DIMENSIONS		
APPLY TO STANDARD	EUROPE APPROVAL POWER SUPPLY CORD		
ISSUE DATE	2014/03/31	REV.	A
REVISE DATE		UNIT	mm
TYPE	IS-14N	DWG. NO.	L4N-3
WIRE	H05VV-F 0.75~1.5/3C		
I-SHENG ELECTRIC WIRE & CABLE CO.,LTD. 鎰勝工業股份有限公司		DESIGN BY	Fanny Wang
		REVIEW BY	James Chan
		APPROVE BY	Ryan Lai

TOLERANCE	
≤ 1.0	±0.3
≤ 10.0	±0.5
≤ 20.0	±1.0
> 20.0	±2.0

FORM : I106a

MARKING

發行 ISSUED 2018.5.21	標 準 名 稱 STD. NAME	EUROPE APPROVAL POWER SUPPLY CORD	編號 FILE NO. L4N-3-2
修訂 REVISED A	品 名 CAT NO.	IS-14N 成品標識示意圖	頁次 PAGE 1

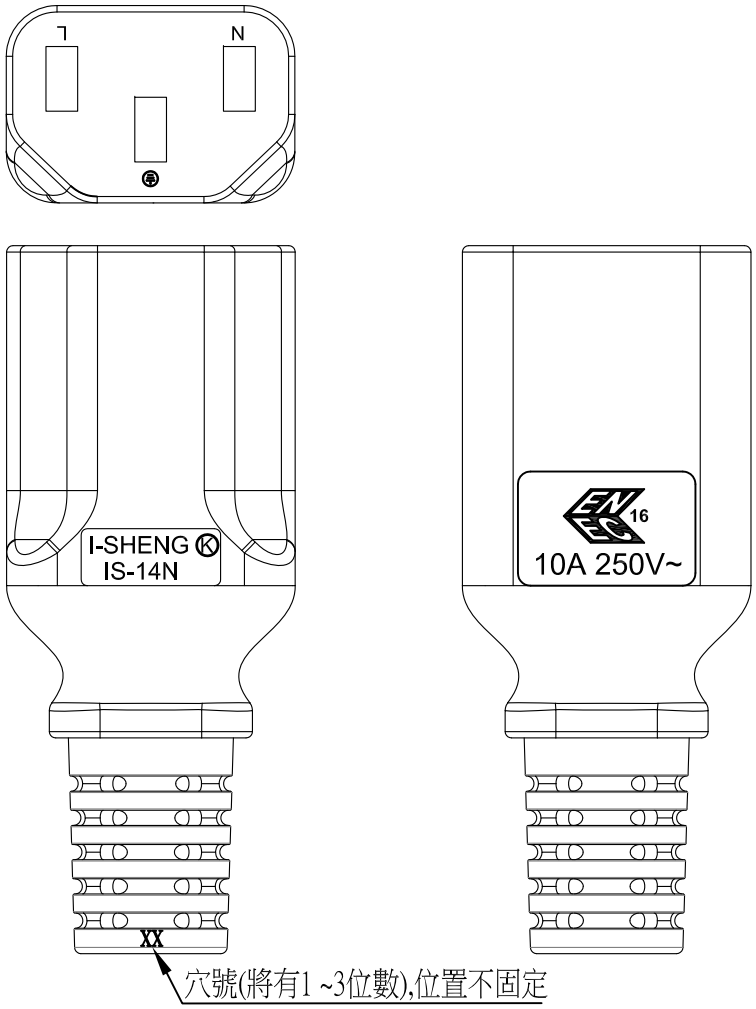

SHENZHEN MARKING:

I-SHENG Ⓒ
IS-14N

10A 250V~

KUNSHAN MARKING:

I-SHENG Ⓚ
IS-14N

10A 250V~

VIETNAM MARKING:

I-SHENG Ⓥ
IS-14N

10A 250V~

I-SHENG ELECTRIC WIRE & CABLE CO.,LTD.	製圖	洪素婉	審查	劉宗科	核准	賴人脩

SPECIFICATION

Rev. 1.0

Issued	2024/12/4	Description	File No.	TB6JC3E4N
Revised		SP-022+IS-14N N.M. H05VV-F 3G 1.0mm²	Page	1/1

1. Scope :
   This specification is applied to power supply cord conforming to:
   IEC 60884-1 EN 60320-1 EN 50525-2-11 IEC 60227

2. Construction and dimensions:
   In accordance with the following tables and attached drawings.

Item	Cat. No.	Rating		Approved No.
		A	V	
Plug	SP-022	16	250	As attachment
Connector	IS-14N	10	250	As attachment

Flexible cord					H05VV-F 3G 1.0mm²			
Approved No.					As attachment			
Rating					300/500V 70℃			
Conductor		Insulation			Jacket			Conductor Resistance
Nominal (mm^2)	Composition (pcs/mm)	Avg. Thickness (mm)	Min Thickness (mm)	Diameter (mm)	Avg. Thickness (mm)	Min Thickness (mm)	Diameter	Max 19.5Ω/km at 20℃
1.0	32/ § 0.20+0,-0.015	0.6	0.44	§ 2.5±0.1	0.8	0.58	§ 7.0±0.2	In case of dispute, Conductor resistance shall be the referee method.

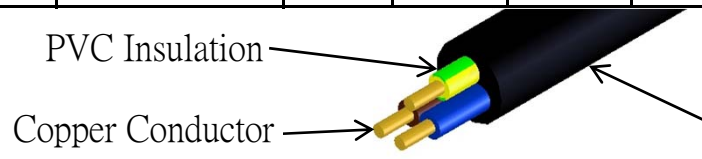

Insulation Color
Blue
Brown
Yellow/Green

3. Cable marking on the sheath:

Shenzhen: N.M. I-SHENG SGIS ◁VDE▷ KEMA-KEUR ◁ÖVE▷ △CEBEC 809 Ⓢ Ⓓ Ⓝ Ⓕ NF-USE 1346 IEMMEQU H05VV-F 3G 1.0mm² 300/500V -LF- CE
Kunshan: N.M. I-SHENG KSIS ◁VDE▷ KEMA-KEUR ◁ÖVE▷ △CEBEC 809 Ⓢ Ⓓ Ⓝ Ⓕ NF-USE 1353 IEMMEQU H05VV-F 3G 1.0mm² 300/500V -LF- CE
Vietnam: N.M. I-SHENG VHIS ◁VDE▷ KEMA-KEUR ◁ÖVE▷ △CEBEC 809 Ⓢ Ⓓ Ⓝ Ⓕ NF-USE 29054 IEMMEQU H05VV-F 3G 1.0mm² 300/500V -LF- CE

I-SHENG ELECTRIC WIRE & CABLE CO., LTD.

發行 ISSUED 2000. 03. 05	標準名稱 STD.NAME	SPECIFICATION	檔案編號 FILE NO
修訂 REVISED 2011.01.21	題目 TITLE	THE CHARACTERISTIC OF POWER SUPPLY CORD FOR EUROPE	SPEC-EU

Items 項目		Conditions 條件		Specification 規格
1	Insulation resistance 絕緣抵抗	The insulation resistance is measured with a d.c. voltage of approximately 500 V, the measurement being made 1 min after application of the voltage.	Between all poles connected together and the body.	The insulation resistance shall be not less than 100 MΩ.
			Between each pole in turn and all others, these being connected to the body.	
2	Electric strength 耐電壓	Testing transformer capacity (耐壓計容量) :500 VA or more Trip current(遮斷電流) :2mA frequency(周波數) :50/60 Hz Test time:1Min	Between each contact in turn and the others connected together. 2800V/1min.	No flashover or breakdown shall occur during the test.
			Between the current-carrying contacts connected together and the body. 4000V/1 min.	
3	Moisture resistance 耐濕性	The humidity treatment is carried out in a humidity cabinet containing air with a relative humidity maintained between 91% and 95%. The temperature of the air, at all places where specimens can be located, is maintained within ±1℃ of any convenient value t℃ between 20℃ and 30℃. Before being placed in the humidity cabinet, the specimens are brought to a temperature between t℃ and (t+4) ℃. The specimens are kept in the cabinet for - 168h (7 days) for connector with earthing contact and for appliance inlets with earthing contact, which are submitted as individual accessories, not incorporated in other equipment.		After this treatment, the specimen shall show no damage.
4	Polarity/Continuity 導通	Line and neutral shall be test at 24V;shall be instantaneous		Without breakdown

I-SHENG ELECTRIC WIRE & CABLE CO., LTD.

發行 ISSUED 2000. 03. 05	標準名稱 STD.NAME	SPECIFICATION	檔案編號 FILE NO
修訂 REVISED 2011.01.21	題目 TITLE	THE CHARACTERISTIC OF POWER SUPPLY CORD FOR EUROPE	SPEC-EU

<table>
<tr><th colspan="2">Items
項目</th><th>Conditions
條件</th><th>Specification
規格</th><th>Items
項目</th></tr>
<tr><td>5</td><td>Flexing test
屈曲強度</td><td>The oscillating member is moved through an angle of 90° (45° on either side of the vertical), the number of flexings being 10,000 and the rate of flexing 60/min.

Specimens with circular section flexible cables are turned through 90° in the oscillating member after 5 000 flexings; specimens with flat flexible cables are only bent in a direction perpendicular to the plane containing the axes of the conductors.
<table>
<tr><th></th><th>Load Weight (g)</th><th>Angle θ(°)</th><th>Optional direction (turns)</th><th>Furthermore 90° rotational direction (turns)</th><th>Rate of flexing per min (turns)</th></tr>
<tr><td>plug</td><td>0.75mm²↓ 1020(10N)
1.0mm²↑ 2040(20N)</td><td>45</td><td>10000</td><td>5000</td><td>60</td></tr>
<tr><td>connector</td><td>0.75mm²↓ 1020(10N)
1.0mm²↑ 2040(20N)</td><td>45</td><td>20000</td><td>10000</td><td>60</td></tr>
</table>
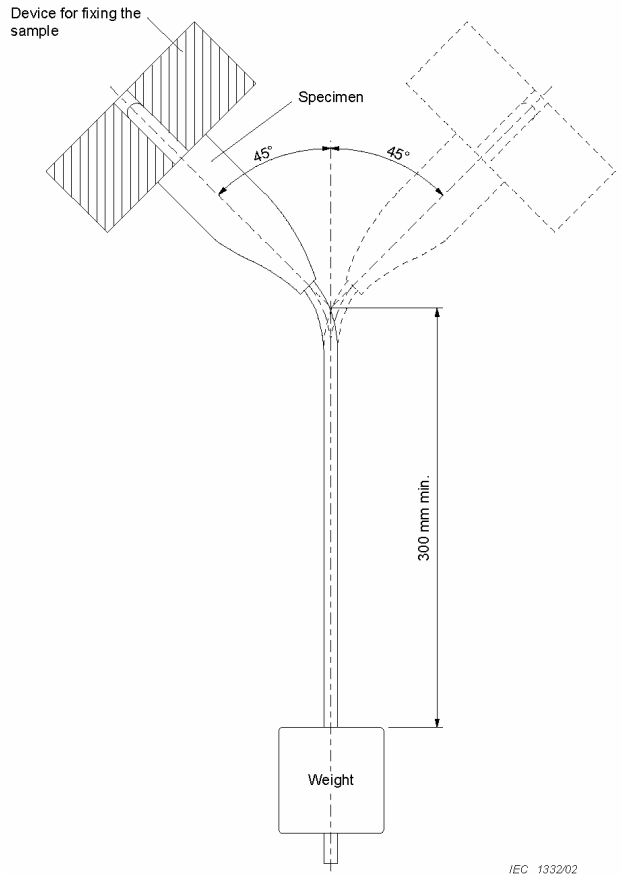

</td><td></td><td>no interruption of the current,
no short circuit between conductors.</td></tr>
</table>

Items 項目		Conditions 條件	Specification 規格
6	Breaking capacity 啓斷容量	The connector and appliance inlet are connected and disconnected 50 times (100 strokes) at a rate of 30 strokes per minute. The length of a stroke of the test apparatus is between 50mm and 60mm. The periods during which the test current is passed from the connection to the subsequent disconnection of the accessories are 1.5(+0.5,-0)s. The test voltage is 275V, the test current is 1.25 times rated current and the power factor is at least 0.95 for 10A and 16A connectors and 0.6±0.05 for other connectors	The specimen shall show no damage impairing its further use and the entry holes for the pins shall not show any serious damage.
7	Normal Operation 正常操作	0,2 A connectors and the appliance inlet are connected and disconnected 2 000 times (4 000 strokes) without current flowing. Other connectors and the appliance inlet are connected and disconnected 1 000 times(2 000 strokes) at rated current and 3 000 times (6 000 strokes) without current flowing.	No damage; The specimen can withstand the electric strength test with the voltage of 1500V.
8	Temperature rise 溫昇	An alternating current of 1.25 times rated current is passed through the current-carrying contacts for 1h. For connectors with earthing contact, the current is then passed through one current-carrying contact and the earthing contact for 1h	The temperature rise of pins, terminals and contacts shall not exceed 45k.

<table>
<tr><th colspan="2">Items
項目</th><th>Conditions
條件</th><th>Specification
規格</th></tr>
<tr><td>9</td><td>Withdrawal force
引拔力</td><td>Verification of the maximum withdrawal force
The connector is inserted to the full depth into and withdrawn from the appropriate appliance inlet 10 times. It is then again inserted for a principal mass is such that it exerts a force equal to one-tenth of the maximum withdrawal force specified in the table and it shall be made in one piece and a supplementary.

Verification of the minimum withdrawal force
The test pin gauge is applied to each individual connector contact with the contact axes vertical and the gauge hanging vertically downwards. The total mass of the gauge shall be such as to exert the applicable force as show in table.

<table><tr><th rowspan="3">Type of connector</th><th colspan="3">Withdrawal force
N (kg)</th></tr><tr><th colspan="2">Multi-pin gauge</th><th rowspan="2">Single-pin gauge minimum</th></tr><tr><th>Max</th><th>Min</th></tr><tr><td>0.2A
2.5A
6A
10A</td><td>50
(5.1)</td><td>10
(1.0)</td><td>1.5
(0.15)</td></tr><tr><td>16A</td><td>60
(6.1)</td><td>15
(1.5)</td><td>2
(0.2)</td></tr></table></td><td>After Verification of the maximum withdrawal force test. The principal mass is hung on the connector without jolting and the supplementary mass is allowed to fall from a height of 5 cm on to the principal mass. The connector shall not remain in the appliance inlet.

After Verification of the minimum withdrawal force test. The test pin gauge is applied gently, and care is taken not to knock the assembly when checking the minimum withdrawal force.
The gauge shall not fall from the contact assembly within 3 sec.</td></tr>
<tr><td>10</td><td>Resistance to heat
耐熱試驗</td><td>The test being made in a heating cabinet at a temperature of 100 ±2℃.

The specimen is clamped between steel jaws, having a cylindrical face of 25mm radius, a width of 15mm and a length of 50mm. The corners are rounded with a radius of 2.5mm.

The specimen is clamped in such a way that the jaws press against it in the area where it is gripped in normal use, the centre line of the jaws coinciding as nearly as possible with the centre of this area.

The force applied through the jaws is 20N</td><td>After 1h, the jaws are removed and the specimen shall show no damage within the meaning of this standard.</td></tr>
</table>

Items 項目		Conditions 條件	Specification 規格
11	Resistance to Aging 老化試驗	The specimens are suspended freely in a heating cabinet, ventilated by natural circulation. They are kept in the cabinet, which is maintained at a temperature of 80 ±2℃, for 168h (7 days). After the test are allowed to attain approximately ambient temperature and are then examined. They shall show no crack visible to the naked eye, nor shall the material have become sticky or greasy, this being judged as follows. 1) A forefinger wrapped in a dry piece of rough cloth is pressed on the specimen with a force of 5N. 2) No traces of the cloth shall remain on the specimen and the material of the specimen shall not stick to the cloth.	After this test, the specimen shall show no damage which would lead to non-compliance with this standard.
12	Bending strength of connector body 本體機械強度	After the connector's point is fixed as shown in the figure below. Load of 10kg shall be applied vertically and slowly for 15 s. 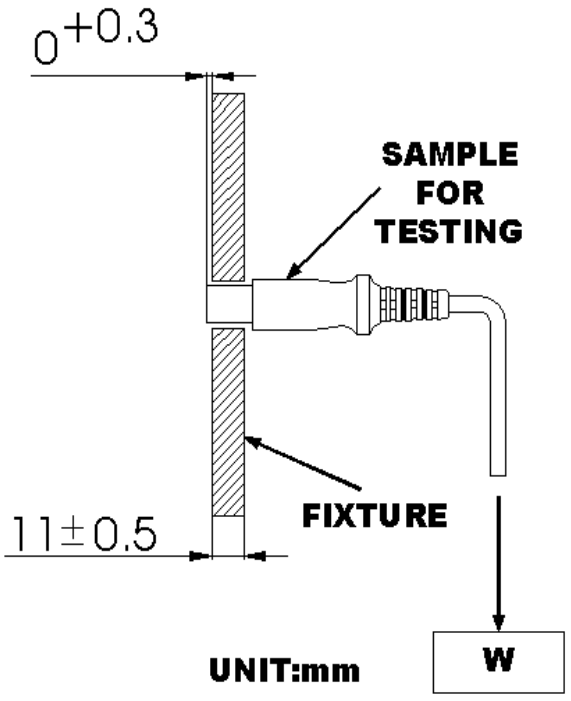 	After the test, the connector shall show no damage.

I-SHENG ELECTRIC WIRE & CABLE CO., LTD.

發行 ISSUED 2000. 03. 05	標準名稱 STD.NAME	SPECIFICATION	檔案編號 FILE NO
修訂 REVISED 2011.01.21	題目 TITLE	THE CHARACTERISTIC OF POWER SUPPLY CORD FOR EUROPE	SPEC-EU

	Items 項目	Conditions 條件	Specification 規格
13	Ball pressure test 球壓測試	The sample is 2 mm wide, surrounding the phase and neutral pin entry holes of socket-outlets, shall be subjected to a ball-pressure test. The part under test shall be placed on a steel plate at least 3 mm thick and in direct contact with it. The surface of the part to be tested is placed in the horizontal position and the hemispherical tip of the test equipment is pressed against the surface with a force of 20 N. The test is made in a heating cabinet at a temperature of (125 ± 2) °C for 1h. After 1 h the ball shall be removed from the specimen, which is then immersed within 10 s, in cold water for cooling down to approximately room temperature. 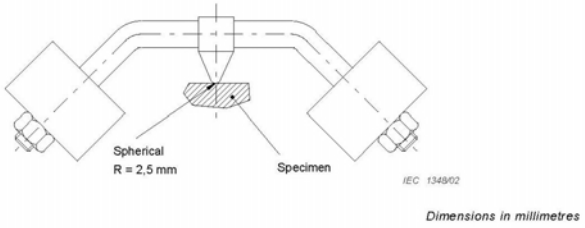 Dimensions in millimetres	The diameter of the impression caused by the ball is measured and shall not exceed 2 mm.
14	Impact test at Low temperature 低溫撞擊測試	The apparatus, positioned on a pad of sponge rubber 40 mm thick, is placed together with the specimens in a freezer at a temperature of (–15 ± 2) °C, for at least 16 h. At the end of this period, each specimen, in turn, is placed in the normal position of use as shown in the figure below, and a weight is allowed to fall from a height of 100 mm. The mass of the falling weight is (1 000 ± 2) g. 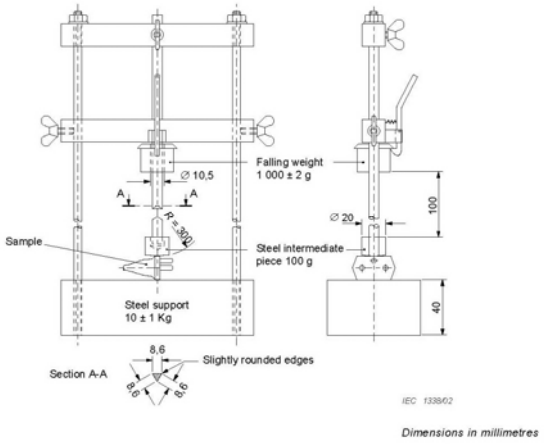 Dimensions in millimetres	After the test, the specimen shall show no damage within the meaning of this standard.

I-SHENG ELECTRIC WIRE & CABLE CO., LTD.

發行 ISSUED 2000. 03. 05	標準名稱 STD.NAME	SPECIFICATION	檔案編號 FILE NO
修訂 REVISED 2011.01.21	題目 TITLE	THE CHARACTERISTIC OF POWER SUPPLY CORD FOR EUROPE	SPEC-EU

	Items 項目	Conditions 條件	Specification 規格
15	Non-migration 非移行性	This test is applicable to fittings (attachment plug and cord connector). For flexible cord, refer to the specifications of it. Ambient temperature : 65±2℃ Relative humidity : Not specified Duration : 72 hours Weight : 566±25g(For two pieces) Place test pieces between two ABS plates then place two glass plates on them and apply a specified weight, as shown in figure below. The assembly shall be stored at a specified temperature for a specified duration. Inspect visually any staining of the area of the ABS that was in contact with test pieces. (Define the special temperature, if necessary) Flat cord 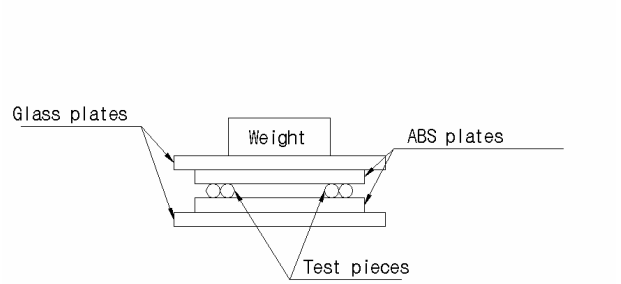 Round cord 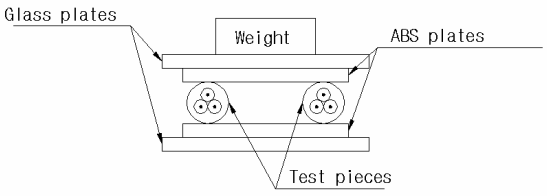 Attachment plug・cord connector 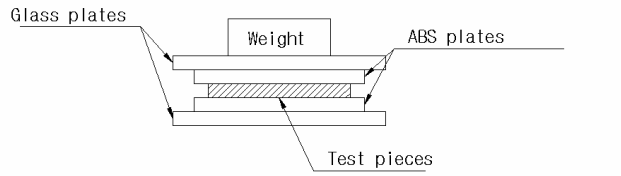 	Visually inspected, any staining of the ABS that was in contact with the test pieces, shall be hardly ecognized.

VDE Prüf- und Zertifizierungsinstitut

ZEICHENGENEHMIGUNG
MARKS APPROVAL

I-Sheng Electric Wire & Cable Co., Ltd.
No. 52 Tin Hwu Road, Ta Hua Village
33334 GWAI SAN, TAOYUAN HSIEN
Taiwan

ist berechtigt, für ihr Produkt /
is authorized to use for their product

Stecker mit Schutzkontakt, nicht wiederanschließbar, umspritzt
Plug, with earthing contact, non-rewirable, moulded

die hier abgebildeten markenrechtlich geschützten Zeichen
für die ab Blatt 2 aufgeführten Typen zu benutzen /
the legally protected Marks as shown below for the types referred to on page 2 ff.

Geprüft und zertifiziert nach /
Tested and certified according to

DIN VDE 0620-2-1 (VDE 0620-2-1):2016-01
DIN VDE 0620-2-1/A1 (VDE 0620-2-1/A1):2017-09

Das Produkt erfüllt auch die Anforderungen nach /
The product also fulfills the requirements of

DIN VDE 0620-2-1/A1 (VDE 0620-2-1/A1):2023-09

Befristet zum / *valid until*: 2025-12-31

Aktenzeichen: 1276300-1560-0003 / 310032
File ref.:

VDE Prüf- und Zertifizierungsinstitut GmbH
VDE Testing and Certification Institute
Zertifizierungsstelle / *Certification*

Ausweis-Nr. 40013526
Certificate No.

Blatt 1
Page

Weitere Bedingungen siehe Rückseite und Folgeblätter /
further conditions see overleaf and following pages

Offenbach, 2005-03-31
(letzte Änderung / updated 2023-12-21)

T. Baumann

VDE Zertifikate sind nur gültig bei Veröffentlichung unter:
VDE certificates are valid only when published on:

http://www.vde.com/zertifikat
http://www.vde.com/certificate

VDE

VDE Prüf- und Zertifizierungsinstitut
Zeichengenehmigung

Name und Sitz des Genehmigungs-Inhabers / *Name and registered seat of the Certificate holder*
I-Sheng Electric Wire & Cable Co., Ltd., No. 52 Tin Hwu Road, Ta Hua Village, 33334 GWAI SAN, TAOYUAN HSIEN, TAIWAN

Aktenzeichen / *File ref.*	letzte Änderung / *updated*	Datum / *Date*
1276300-1560-0003 / 310032 / TL3 / ROI	2023-12-21	2005-03-31

Dieses Blatt gilt nur in Verbindung mit Blatt 1 des Zeichengenehmigungsausweises Nr. 40013526.
This supplement is only valid in conjunction with page 1 of the Certificate No. 40013526.

Stecker mit Schutzkontakt, nicht wiederanschließbar, umspritzt
Plug, with earthing contact, non-rewirable, moulded

Typ(en) / *Type(s)*

SP-022

Bemessungsspannung *Rated voltage*	AC 250 V
Bemessungsstrom *Rated current*	16 A
Polzahl *Number of poles*	2-polig mit zwei Schutzkontaktsystemen *2-pole with two earthing contact systems*
Schutzart *Degree of protection*	IP20
Bauart *Kind of construction*	DIN 49441-R2
Kennzeichnung der Fertigungsstätte(n) *Marking of manufacturing place(s)*	30005950: ohne Kennzeichnung / without marking 30006554: "K" 30006550: "C" 30019097: "V"
Produktinformation *Product information*	siehe Anlagen Nr. 700, 701,702,703 800, 801, 802, 803, 850, 900 vom 2023-12-21 *see Appendix No. 700, 701,702,703 800, 801, 802, 803, 850, 900 dated 2023-12-21*

VDE Prüf- und Zertifizierungsinstitut
Zeichengenehmigung

Ausweis-Nr. / *Certificate No.* 40013526

Beiblatt / *Supplement*

Name und Sitz des Genehmigungs-Inhabers / *Name and registered seat of the Certificate holder*
I-Sheng Electric Wire & Cable Co., Ltd., No. 52 Tin Hwu Road, Ta Hua Village, 33334 GWAI SAN, TAOYUAN HSIEN, TAIWAN

Aktenzeichen / *File ref.*
1276300-1560-0003 / 310032 / TL3 / ROI

letzte Änderung / *updated*
2023-12-21

Datum / *Date*
2005-03-31

Dieses Beiblatt ist Bestandteil des Zeichengenehmigungsausweises Nr. 40013526.
This supplement is part of the Certificate No. 40013526.

Stecker mit Schutzkontakt, nicht wiederanschließbar, umspritzt
Plug, with earthing contact, non-rewirable, moulded

Fertigungsstätte(n)
Place(s) of manufacture

Referenz/*Reference* **30005950**	I-Sheng Electric Wire & Cable Co., Ltd. No. 52 Tin Hwu Road, Ta Hua Village 33334 GWAI SAN, TAOYUAN HSIEN TAIWAN
Referenz/*Reference* **30006554**	I-Sheng Electronics (Kunshan) Co., Ltd. 888 Tai Shan Road Kunshan Development Zone 215300 KUNSHAN CITY Jiangsu CHINA
Referenz/*Reference* **30006550**	I-Sheng Mfg (Song Gang) Factory Tang Xiayong Road Songgang Town 518105 BAOAN AREA, SHENZHEN Guangdong CHINA
Referenz/*Reference* **30019097**	I-Sheng Electric Wire & Cable Company (Vietnam) Lot D4-2 & Lot H5-6 Que Vo Road Que Vo Industrial Park 165000 BAC NINH PROVINCE VIETNAM

VDE Prüf- und Zertifizierungsinstitut
Zeichengenehmigung

Ausweis-Nr. / *Certificate No.* 40013526

Infoblatt / *Info sheet*

Name und Sitz des Genehmigungs-Inhabers / *Name and registered seat of the Certificate holder*
I-Sheng Electric Wire & Cable Co., Ltd., No. 52 Tin Hwu Road, Ta Hua Village, 33334 GWAI SAN, TAOYUAN HSIEN, TAIWAN

Aktenzeichen / *File ref.*	letzte Änderung / *updated*	Datum / *Date*
1276300-1560-0003 / 310032 / TL3 / ROI	2023-12-21	2005-03-31

Dieses Blatt gilt nur in Verbindung mit Blatt 1 des Zeichengenehmigungsausweises Nr. 40013526.
This supplement is only valid in conjunction with page 1 of the Certificate No. 40013526.

Genehmigung zum Benutzen des auf Seite 1 abgebildeten markenrechtlich geschützten Zeichens des VDE:

Grundlage für die Benutzung sind die Allgemeinen Geschäftsbedingungen (AGB) der VDE Prüf- und Zertifizierungsinstitut GmbH (www.vde.com\AGB-Institut). Das Recht zur Benutzung erstreckt sich nur auf die bezeichnete Firma mit den genannten Fertigungsstätten und die oben aufgeführten Produkte mit den zugeordneten Bezeichnungen. Die Fertigungsstätte muss so eingerichtet sein, dass eine gleichmäßige Herstellung der geprüften und zertifizierten Ausführung gewährleistet ist.
Die Genehmigung ist so lange gültig wie die VDE-Bestimmungen gelten, die der Zertifizierung zugrunde gelegen haben, sofern sie nicht auf Grund anderer Bedingungen aus der VDE Prüf- und Zertifizierungsordnung (PM102) zurückgezogen werden muss.
Der Gültigkeitszeitraum einer VDE-GS-Zeichengenehmigung kann auf Antrag verlängert werden. Bei gesetzlichen und / oder normativen Änderungen kann die VDE-GS-Zeichengenehmigung ihre Gültigkeit zu einem früheren als dem angegebenen Datum verlieren.
Produkte, die das Biozid Dimethylfumarat (DMF) enthalten, dürfen gemäß der Kommissionsentscheidung 2009/251/EG nicht mehr in den Verkehr gebracht oder auf dem Markt bereitgestellt werden.
Der VDE-Zeichengenehmigungsausweis wird ausschließlich auf der ersten Seite unterzeichnet.

Approval to use the legally protected Mark of the VDE as shown on the first page:
Basis for the use are the general terms and conditions of the VDE Testing and Certification Institute (www.vde.com\terms-institute). The right to use the mark is granted only to the mentioned company with the named places of manufacture and the listed products with the related type references. The place of manufacture shall be equipped in a way that a constant manufacturing of the certified construction is assured.
The approval is valid as long as the VDE specifications are in force, on which the certification is based on, unless it is withdrawn according to the VDE Testing and Certification Procedure (PM102E).
The validity period of a VDE-GS-Mark Approval may be prolonged on request. In case of changes in legal and / or normative requirements, the validity period of a VDE-GS-Mark Approval may be shortened.
Products containing the biocide dimethylfumarate (DMF) may not be marketed or made available on the EC market according to the Commission Decision 2009/251/EC.
The approval is solely signed on the first page.

VDE Prüf- und Zertifizierungsinstitut
Zeichengenehmigung

Rubrik / *Rubric*	Ausweis-Nr. / *Certificate No.*	Anlage / *Appendix*
341	40013526	900

Name und Sitz des Genehmigungs-Inhabers / *Name and registered seat of the Certificate holder*

I-Sheng Electric Wire & Cable, Co., Ltd., No. 52 Tin Hwu Road, Ta Hua Village, 33334 GWAI SAN, TAOYUAN HSIEN, Taiwan

Aktenzeichen / *File ref.*	letzte Änderung / *updated*	Datum / *Date*
1276300-1560-0003/310032/TL3/ROI	2023-12-21	2005-03-31

Dieses Blatt gilt nur in Verbindung mit Blatt 1 des Zeichengenehmigungsausweises Nr. 40013526 .
This supplement is only valid in conjunction with page 1 of the Certificate No. 40013526

Stecker mit Schutzkontakt, nicht wiederanschließbar, umspritzt
Plug, with earthing contact, non-rewirable, moulded

Bilder
Pictures



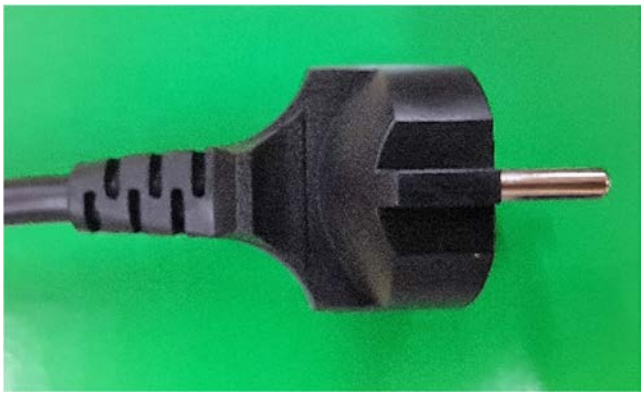

Aufschriften Fertigungsstätte/ markings of factory:
3005950 (ohne/ without)

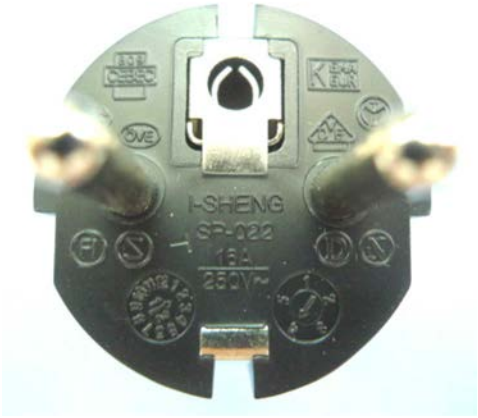



Aufschriften Fertigungsstätte/ markings of factory:
30006550 “C“





VDE Prüf- und Zertifizierungsinstitut
Zeichengenehmigung

Rubrik / *Rubric*	Ausweis-Nr. / *Certificate No.*	Anlage / *Appendix*
341	40013526	900

Name und Sitz des Genehmigungs-Inhabers / *Name and registered seat of the Certificate holder*

I-Sheng Electric Wire & Cable, Co., Ltd., No. 52 Tin Hwu Road, Ta Hua Village, 33334 GWAI SAN, TAOYUAN HSIEN, Taiwan

Aktenzeichen / *File ref.*	letzte Änderung / *updated*	Datum / *Date*
1276300-1560-0003/310032/TL3/ROI	2023-12-21	2005-03-31

Dieses Blatt gilt nur in Verbindung mit Blatt 1 des Zeichengenehmigungsausweises Nr. 40013526 .

This supplement is only valid in conjunction with page 1 of the Certificate No. 40013526

Aufschriften Fertigungsstätte/ markings of factory:
30006554 “K“





Aufschriften Fertigungsstätte/ markings of factory:
30019097 “V“

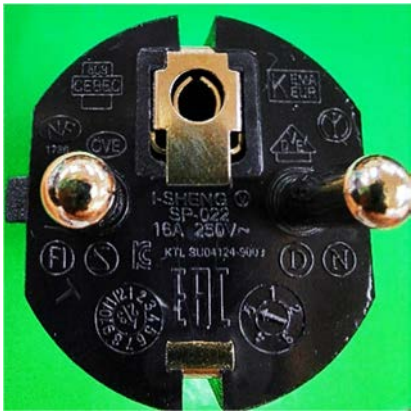



VDE Prüf- und Zertifizierungsinstitut
Zeichengenehmigung

Rubrik / *Rubric*	Ausweis-Nr. / *Certificate No.*	Anlage / *Appendix*
341	40013526	700

Name und Sitz des Genehmigungs-Inhabers / *Name and registered seat of the Certificate holder*

I-Sheng Electric Wire & Cable, Co., Ltd., No. 52 Tin Hwu Road, Ta Hua Village, 33334 GWAI SAN, TAOYUAN HSIEN, Taiwan

Aktenzeichen / *File ref.*	letzte Änderung / *updated*	Datum / *Date*
1276300-1560-0003/310032/TL3/ROI	2023-12-21	2005-03-31

Dieses Blatt gilt nur in Verbindung mit Blatt 1 des Zeichengenehmigungsausweises Nr. 40013526 .
This supplement is only valid in conjunction with page 1 of the Certificate No. 40013526

Stecker mit Schutzkontakt, nicht wiederanschließbar, umspritzt
Plug, with earthing contact, non-rewirable, moulded

Typ(en) / *Type(s)*	SP-022

Fertigungsstätte / *Place of manufacture*	**30005950**
Kennzeichnung / *Identification*	**---**

Leitungsaufdruck *Marking on cable*	H03VV-F 3G 0,5 mm² (max. 2 m)	H03VV-F 3G 0,75 mm²	H05VV-F 3G 0,75 mm²	H05VV-F 3G 1,0 mm²	H05VV-F 3G 1,5 mm²	H05RR-F 3G 0,75 mm²	H05RR-F 3G 1,0 mm²	H05RR-F 3G 1,5 mm²	H05RN-F 3G 0,75 mm²	H05RN-F 3G 1,0 mm²	H07RN-F 3G 1,0 mm²	H07RN-F 3G 1,5 mm²	H03RT-H 3G 0,75 mm²	H03RT-H 3G 1,0 mm²	H05V2V2-F 3G 0,75 mm²	H05V2V2-F 3G 1,0 mm²	H05V2V2-F 3G 1,5 mm²					
I-SHENG	---	---	X	---	---	---	---	---	---	---	---	---	---	---	---	---	---	---	---	---	---	---

genehmigte Ausführung / *approved version*: X nicht genehmigte Ausführung / *not approved version*: ---

Detailangaben siehe Anlage Nr.: *Details see appendix No.:*	800

VDE Prüf- und Zertifizierungsinstitut
Zeichengenehmigung

Rubrik / *Rubric*	Ausweis-Nr. / *Certificate No.*	Anlage / *Appendix*
341	40013526	700

Name und Sitz des Genehmigungs-Inhabers / *Name and registered seat of the Certificate holder*

I-Sheng Electric Wire & Cable, Co., Ltd., No. 52 Tin Hwu Road, Ta Hua Village, 33334 GWAI SAN, TAOYUAN HSIEN, Taiwan

Aktenzeichen / *File ref.*	letzte Änderung / *updated*	Datum / *Date*
1276300-1560-0003/310032/TL3/ROI	2023-12-21	2005-03-31

Dieses Blatt gilt nur in Verbindung mit Blatt 1 des Zeichengenehmigungsausweises Nr. 40013526 .

This supplement is only valid in conjunction with page 1 of the Certificate No. 40013526

Stecker mit Schutzkontakt, nicht wiederanschließbar, umspritzt
Plug, with earthing contact, non-rewirable, moulded

Typ(en) / *Type(s)*	SP-022

Fertigungsstätte / *Place of manufacture*	**30006550**
Kennzeichnung / *Identification*	**C**

Leitungsaufdruck *Marking on cable*	H03VV-F 3G 0,5 mm² (max. 2 m)	H03VV-F 3G 0,75 mm²	H05VV-F 3G 0,75 mm²	H05VV-F 3G 1,0 mm²	H05VV-F 3G 1,5 mm²	H05RR-F 3G 0,75 mm²	H05RR-F 3G 1,0 mm²	H05RR-F 3G 1,5 mm²	H05RN-F 3G 0,75 mm²	H05RN-F 3G 1,0 mm²	H07RN-F 3G 1,0 mm²	H07RN-F 3G 1,5 mm²	H03RT-H 3G 0,75 mm²	H03RT-H 3G 1,0 mm²	H03V2V2-F 3G 0,75 mm²	H05V2V2-F 3G 0,75 mm²	H05V2V2-F 3G 1,0 mm²	H05V2V2-F 3G 1,5 mm²	05VAV5-F 3G 0,75 mm²	0VAV5-F 3G 1,0 mm²		
I-SHENG KSIS	---	---	---	---	---	X	X	X	X	X	X	X	---	---	---	---	---	---	---	---	---	---
I-SHENG SGIS	---	X	X	X	X	---	---	---	---	---	---	---	---	---	X	X	X	---	---	---	---	---
I-SHENG VDE-Reg.-Nr.: 9825	---	---	---	---	---	---	---	---	---	---	---	---	---	---	---	---	---	---	X	X	---	---

genehmigte Ausführung / *approved version*: X nicht genehmigte Ausführung / *not approved version*: ---

Detailangaben siehe Anlage Nr.: *Details see appendix No.:*	800

VDE Prüf- und Zertifizierungsinstitut
Zeichengenehmigung

Rubrik / *Rubric*	Ausweis-Nr. / *Certificate No.*	Anlage / *Appendix*
341	40013526	700

Name und Sitz des Genehmigungs-Inhabers / *Name and registered seat of the Certificate holder*

I-Sheng Electric Wire & Cable, Co., Ltd., No. 52 Tin Hwu Road, Ta Hua Village, 33334 GWAI SAN, TAOYUAN HSIEN, Taiwan

Aktenzeichen / *File ref.*	letzte Änderung / *updated*	Datum / *Date*
1276300-1560-0003/310032/TL3/ROI	2023-12-21	2005-03-31

Dieses Blatt gilt nur in Verbindung mit Blatt 1 des Zeichengenehmigungsausweises Nr. 40013526 .
This supplement is only valid in conjunction with page 1 of the Certificate No. 40013526

Stecker mit Schutzkontakt, nicht wiederanschließbar, umspritzt
Plug, with earthing contact, non-rewirable, moulded

Typ(en) / *Type(s)*	SP-022

Fertigungsstätte / *Place of manufacture*	**30006554**
Kennzeichnung / *Identification*	**K**

Leitungsaufdruck *Marking on cable*	H03VV-F 3G 0,5 mm² (max. 2 m)	H03VV-F 3G 0,75 mm²	H05VV-F 3G 0,75 mm²	H05VV-F 3G 1,0 mm²	H05VV-F 3G 1,5 mm²	H05RR-F 3G 0,75 mm²	H05RR-F 3G 1,0 mm²	H05RR-F 3G 1,5 mm²	H05RN-F 3G 0,75 mm²	H05RN-F 3G 1,0 mm²	H07RN-F 3G 1,0 mm²	H07RN-F 3G 1,5 mm²	H03RT-H 3G 0,75 mm²	H03RT-H 3G 1,0 mm²	H03V2V2-F 3G 0,75 mm²	H05V2V2-F 3G 0,75 mm²	H05V2V2-F 3G 1,0 mm²	H05V2V2-F 3G 1,5 mm²	05VAV5-F 3G 0,75 mm²	0VAV5-F 3G 1,0 mm²		
I-SHENG KSIS	---	X	X	X	X	X	X	X	X	X	X	X	---	---	---	---	---	---	---	---	---	---
I-SHENG VDE-Reg.-Nr.: 9825	---	---	---	---	---	---	---	---	---	---	---	---	---	---	---	---	---	---	X	X	---	---

genehmigte Ausführung / *approved version*: X nicht genehmigte Ausführung / *not approved version*: ---

Detailangaben siehe Anlage Nr.: *Details see appendix No.:*	800

VDE Prüf- und Zertifizierungsinstitut
Zeichengenehmigung

Rubrik / *Rubric*	Ausweis-Nr. / *Certificate No.*	Anlage / *Appendix*
341	40013526	700

Name und Sitz des Genehmigungs-Inhabers / *Name and registered seat of the Certificate holder*

I-Sheng Electric Wire & Cable, Co., Ltd., No. 52 Tin Hwu Road, Ta Hua Village, 33334 GWAI SAN, TAOYUAN HSIEN, Taiwan

Aktenzeichen / *File ref.*	letzte Änderung / *updated*	Datum / *Date*
1276300-1560-0003/310032/TL3/ROI	2023-12-21	2005-03-31

Dieses Blatt gilt nur in Verbindung mit Blatt 1 des Zeichengenehmigungsausweises Nr. 40013526 .
This supplement is only valid in conjunction with page 1 of the Certificate No. 40013526

Stecker mit Schutzkontakt, nicht wiederanschließbar, umspritzt
Plug, with earthing contact, non-rewirable, moulded

Typ(en) / *Type(s)*	SP-022

Fertigungsstätte / *Place of manufacture*	**30019097**
Kennzeichnung / *Identification*	**V**

Leitungsaufdruck *Marking on cable*	H03VV-F 3G 0,5 mm² (max. 2 m)	H03VV-F 3G 0,75 mm²	H05VV-F 3G 0,75 mm²	H05VV-F 3G 1,0 mm²	H05VV-F 3G 1,5 mm²	H05RR-F 3G 0,75 mm²	H05RR-F 3G 1,0 mm²	H05RR-F 3G 1,5 mm²	H05RN-F 3G 0,75 mm²	H05RN-F 3G 1,0 mm²	H07RN-F 3G 1,0 mm²	H07RN-F 3G 1,5 mm²	H03RT-H 3G 0,75 mm²	H03RT-H 3G 1,0 mm²	H03V2V2-F 3G 0,75 mm²	H05V2V2-F 3G 0,75 mm²	H05V2V2-F 3G 1,0 mm²	H05V2V2-F 3G 1,5 mm²	05VAV5-F 3G 0,75 mm²	0VAV5-F 3G 1,0 mm²		
I-SHENG SGIS	---	X	X	X	X	---	---	---	---	---	---	---	---	---	---	---	---	---	---	---	---	---

genehmigte Ausführung / *approved version*: X nicht genehmigte Ausführung / *not approved version*: ---

Detailangaben siehe Anlage Nr.: *Details see appendix No.:*	800

VDE Prüf- und Zertifizierungsinstitut
Zeichengenehmigung

Rubrik / *Rubric*	Ausweis-Nr. / *Certificate No.*	Anlage / *Appendix*
341	40013526	701

Name und Sitz des Genehmigungs-Inhabers / *Name and registered seat of the Certificate holder*

I-Sheng Electric Wire & Cable, Co., Ltd., No. 52 Tin Hwu Road, Ta Hua Village, 33334 GWAI SAN, TAOYUAN HSIEN, Taiwan

Aktenzeichen / *File ref.*	letzte Änderung / *updated*	Datum / *Date*
1276300-1560-0003/310032/TL3/ROI	2023-12-21	2005-03-31

Dieses Blatt gilt nur in Verbindung mit Blatt 1 des Zeichengenehmigungsausweises Nr. 40013526 .
This supplement is only valid in conjunction with page 1 of the Certificate No. 40013526

Stecker mit Schutzkontakt, nicht wiederanschließbar, umspritzt
Plug, with earthing contact, non-rewirable, moulded

Typ(en) / *Type(s)*	SP-022

Fertigungsstätte / *Place of manufacture*	**30006550**
Kennzeichnung / *Identification*	**C**

Leitungsaufdruck *Marking on cable*	H03VV-F 3G 0,5 mm² (max. 2 m)	H03VV-F 3G 0,75 mm²	H05VV-F 3G 0,75 mm²	H05VV-F 3G 1,0 mm²	H05VV-F 3G 1,5 mm²	H05RR-F 3G 0,75 mm²	H05RR-F 3G 1,0 mm²	H05RR-F 3G 1,5 mm²	H05RN-F 3G 0,75 mm²	H05RN-F 3G 1,0 mm²	H07RN-F 3G 1,0 mm²	H07RN-F 3G 1,5 mm²	H03RT-H 3G 0,75 mm²	H03RT-H 3G 1,0 mm²	H03V2V2-F 3G 0,75 mm²	H05V2V2-F 3G 0,75 mm²	H05V2V2-F 3G 1,0 mm²	H05V2V2-F 3G 1,5 mm²	05VAV5-F 3G 0,75 mm²	0VAV5-F 3G 1,0 mm²		
I-SHENG KSIS	---	---	---	---	---	X	X	X	X	X	X	X	---	---	---	---	---	---	---	---	---	---
I-SHENG SGIS	---	X	X	X	X	---	---	---	---	---	---	---	---	---	X	X	X	---	---	---	---	---
I-SHENG VDE-Reg.-Nr.: 9825	---	---	---	---	---	---	---	---	---	---	---	---	---	---	---	---	---	---	X	X	---	---

genehmigte Ausführung / *approved version*: X nicht genehmigte Ausführung / *not approved version*: ---

Detailangaben siehe Anlage Nr.: *Details see appendix No.:*	801

VDE Prüf- und Zertifizierungsinstitut
Zeichengenehmigung

Rubrik / *Rubric*	Ausweis-Nr. / *Certificate No.*	Anlage / *Appendix*
341	40013526	701

Name und Sitz des Genehmigungs-Inhabers / *Name and registered seat of the Certificate holder*

I-Sheng Electric Wire & Cable, Co., Ltd., No. 52 Tin Hwu Road, Ta Hua Village, 33334 GWAI SAN, TAOYUAN HSIEN, Taiwan

Aktenzeichen / *File ref.*	letzte Änderung / *updated*	Datum / *Date*
1276300-1560-0003/310032/TL3/ROI	2023-12-21	2005-03-31

Dieses Blatt gilt nur in Verbindung mit Blatt 1 des Zeichengenehmigungsausweises Nr. 40013526 .
This supplement is only valid in conjunction with page 1 of the Certificate No. 40013526

Stecker mit Schutzkontakt, nicht wiederanschließbar, umspritzt
Plug, with earthing contact, non-rewirable, moulded

Typ(en) / *Type(s)*	SP-022

Fertigungsstätte / *Place of manufacture*	**30006554**
Kennzeichnung / *Identification*	**K**

Leitungsaufdruck *Marking on cable*	H03VV-F 3G 0,5 mm² (max. 2 m)	H03VV-F 3G 0,75 mm²	H05VV-F 3G 0,75 mm²	H05VV-F 3G 1,0 mm²	H05VV-F 3G 1,5 mm²	H05RR-F 3G 0,75 mm²	H05RR-F 3G 1,0 mm²	H05RR-F 3G 1,5 mm²	H05RN-F 3G 0,75 mm²	H05RN-F 3G 1,0 mm²	H07RN-F 3G 1,0 mm²	H07RN-F 3G 1,5 mm²	H03RT-H 3G 0,75 mm²	H03RT-H 3G 1,0 mm²	H03V2V2-F 3G 0,75 mm²	H05V2V2-F 3G 0,75 mm²	H05V2V2-F 3G 1,0 mm²	H05V2V2-F 3G 1,5 mm²	05VAV5-F 3G 0,75 mm²	0VAV5-F 3G 1,0 mm²		
I-SHENG KSIS	---	X	X	X	X	X	X	X	X	X	X	X	---	---	---	---	---	---	---	---	---	---
I-SHENG VDE-Reg.-Nr.: 9825	---	---	---	---	---	---	---	---	---	---	---	---	---	---	---	---	---	---	X	X	---	---

genehmigte Ausführung / *approved version*: X nicht genehmigte Ausführung / *not approved version*: ---

Detailangaben siehe Anlage Nr.: *Details see appendix No.:*	801

VDE Prüf- und Zertifizierungsinstitut
Zeichengenehmigung

Rubrik / *Rubric*	Ausweis-Nr. / *Certificate No.*	Anlage / *Appendix*
341	40013526	701

Name und Sitz des Genehmigungs-Inhabers / *Name and registered seat of the Certificate holder*

I-Sheng Electric Wire & Cable, Co., Ltd., No. 52 Tin Hwu Road, Ta Hua Village, 33334 GWAI SAN, TAOYUAN HSIEN, Taiwan

Aktenzeichen / *File ref.*	letzte Änderung / *updated*	Datum / *Date*
1276300-1560-0003/310032/TL3/ROI	2023-12-21	2005-03-31

Dieses Blatt gilt nur in Verbindung mit Blatt 1 des Zeichengenehmigungsausweises Nr. 40013526 .
This supplement is only valid in conjunction with page 1 of the Certificate No. 40013526

Stecker mit Schutzkontakt, nicht wiederanschließbar, umspritzt
Plug, with earthing contact, non-rewirable, moulded

Typ(en) / *Type(s)*	SP-022

Fertigungsstätte / *Place of manufacture*	**30019097**
Kennzeichnung / *Identification*	**V**

Leitungsaufdruck *Marking on cable*	H03VV-F 3G 0,5 mm² (max. 2 m)	H03VV-F 3G 0,75 mm²	H05VV-F 3G 0,75 mm²	H05VV-F 3G 1,0 mm²	H05VV-F 3G 1,5 mm²	H05RR-F 3G 0,75 mm²	H05RR-F 3G 1,0 mm²	H05RR-F 3G 1,5 mm²	H05RN-F 3G 0,75 mm²	H05RN-F 3G 1,0 mm²	H07RN-F 3G 1,0 mm²	H07RN-F 3G 1,5 mm²	H03RT-H 3G 0,75 mm²	H03RT-H 3G 1,0 mm²	H03V2V2-F 3G 0,75 mm²	H05V2V2-F 3G 0,75 mm²	H05V2V2-F 3G 1,0 mm²	H05V2V2-F 3G 1,5 mm²	05VAV5-F 3G 0,75 mm²	0VAV5-F 3G 1,0 mm²		
I-SHENG SGIS	---	X	X	X	X	---	---	---	---	---	---	---	---	---	---	---	---	---	---	---	---	---

genehmigte Ausführung / *approved version*: X nicht genehmigte Ausführung / *not approved version*: ---

Detailangaben siehe Anlage Nr.: *Details see appendix No.:*	801

VDE Prüf- und Zertifizierungsinstitut
Zeichengenehmigung

Rubrik / *Rubric*	Ausweis-Nr. / *Certificate No.*	Anlage / *Appendix*
341	40013526	702

Name und Sitz des Genehmigungs-Inhabers / *Name and registered seat of the Certificate holder*

I-Sheng Electric Wire & Cable, Co., Ltd., No. 52 Tin Hwu Road, Ta Hua Village, 33334 GWAI SAN, TAOYUAN HSIEN, Taiwan

Aktenzeichen / *File ref.*	letzte Änderung / *updated*	Datum / *Date*
1276300-1560-0003/310032/TL3/ROI	2023-12-21	2005-03-31

Dieses Blatt gilt nur in Verbindung mit Blatt 1 des Zeichengenehmigungsausweises Nr. 40013526 .
This supplement is only valid in conjunction with page 1 of the Certificate No. 40013526

Stecker mit Schutzkontakt, nicht wiederanschließbar, umspritzt
Plug, with earthing contact, non-rewirable, moulded

Typ(en) / *Type(s)*	SP-022

Fertigungsstätte / *Place of manufacture*	**30006550**	**30019097**
Kennzeichnung / *Identification*	**C**	**V**

Leitungsaufdruck *Marking on cable*	H03VV-F 3G 0,5 mm² (max. 2 m)	H03VV-F 3G 0,75 mm²	H05VV-F 3G 0,75 mm²	H05VV-F 3G 1,0 mm²	H05VV-F 3G 1,5 mm²	H05RR-F 3G 0,75 mm²	H05RR-F 3G 1,0 mm²	H05RR-F 3G 1,5 mm²	H05RN-F 3G 0,75 mm²	H05RN-F 3G 1,0 mm²	H07RN-F 3G 1,0 mm²	H07RN-F 3G 1,5 mm²	H03RT-H 3G 0,75 mm²	H03RT-H 3G 1,0 mm²	H03V2V2-F 3G 0,75 mm²	H05V2V2-F 3G 0,75 mm²	H05V2V2-F 3G 1,0 mm²	H05V2V2-F 3G 1,5 mm²	05VAV5-F 3G 0,75 mm²	0VAV5-F 3G 1,0 mm²		
I-SHENG SGIS	---	X	X	X	X	---	---	---	---	---	---	---	---	---	X	X	X	---	---	---	---	---

genehmigte Ausführung / *approved version*: X nicht genehmigte Ausführung / *not approved version*: ---

Detailangaben siehe Anlage Nr.: *Details see appendix No.:*	801

VDE Prüf- und Zertifizierungsinstitut
Zeichengenehmigung

Rubrik / *Rubric*	Ausweis-Nr. / *Certificate No.*	Anlage / *Appendix*
341	40013526	702

Name und Sitz des Genehmigungs-Inhabers / *Name and registered seat of the Certificate holder*

I-Sheng Electric Wire & Cable, Co., Ltd., No. 52 Tin Hwu Road, Ta Hua Village, 33334 GWAI SAN, TAOYUAN HSIEN, Taiwan

Aktenzeichen / *File ref.*	letzte Änderung / *updated*	Datum / *Date*
1276300-1560-0003/310032/TL3/ROI	2023-12-21	2005-03-31

Dieses Blatt gilt nur in Verbindung mit Blatt 1 des Zeichengenehmigungsausweises Nr. 40013526 .
This supplement is only valid in conjunction with page 1 of the Certificate No. 40013526

Stecker mit Schutzkontakt, nicht wiederanschließbar, umspritzt
Plug, with earthing contact, non-rewirable, moulded

Typ(en) / *Type(s)*	SP-022

Fertigungsstätte / *Place of manufacture*	**30006554**
Kennzeichnung / *Identification*	**K**

Leitungsaufdruck *Marking on cable*	H03VV-F 3G 0,5 mm² (max. 2 m)	H03VV-F 3G 0,75 mm²	H05VV-F 3G 0,75 mm²	H05VV-F 3G 1,0 mm²	H05VV-F 3G 1,5 mm²	H05RR-F 3G 0,75 mm²	H05RR-F 3G 1,0 mm²	H05RR-F 3G 1,5 mm²	H05RN-F 3G 0,75 mm²	H05RN-F 3G 1,0 mm²	H07RN-F 3G 1,0 mm²	H07RN-F 3G 1,5 mm²	H03RT-H 3G 0,75 mm²	H03RT-H 3G 1,0 mm²	H03V2V2-F 3G 0,75 mm²	H05V2V2-F 3G 0,75 mm²	H05V2V2-F 3G 1,0 mm²	H05V2V2-F 3G 1,5 mm²	05VAV5-F 3G 0,75 mm²	0VAV5-F 3G 1,0 mm²		
I-SHENG KSIS	---	X	X	X	X	---	---	---	---	---	---	---	---	---	---	---	---	---	---	---	---	---

genehmigte Ausführung / *approved version*: X nicht genehmigte Ausführung / *not approved version*: ---

Detailangaben siehe Anlage Nr.: *Details see appendix No.:*	802

VDE Prüf- und Zertifizierungsinstitut
Zeichengenehmigung

Rubrik / *Rubric*	Ausweis-Nr. / *Certificate No.*	Anlage / *Appendix*
341	40013526	703

Name und Sitz des Genehmigungs-Inhabers / *Name and registered seat of the Certificate holder*

I-Sheng Electric Wire & Cable, Co., Ltd., No. 52 Tin Hwu Road, Ta Hua Village, 33334 GWAI SAN, TAOYUAN HSIEN, Taiwan

Aktenzeichen / *File ref.*	letzte Änderung / *updated*	Datum / *Date*
1276300-1560-0003/310032/TL3/ROI	2023-12-21	2005-03-31

Dieses Blatt gilt nur in Verbindung mit Blatt 1 des Zeichengenehmigungsausweises Nr. 40013526 .
This supplement is only valid in conjunction with page 1 of the Certificate No. 40013526

Stecker mit Schutzkontakt, nicht wiederanschließbar, umspritzt
Plug, with earthing contact, non-rewirable, moulded

Typ(en) / *Type(s)*	SP-022

Fertigungsstätte / *Place of manufacture*	**30006550**	**30019097**
Kennzeichnung / *Identification*	**C**	**V**

Leitungsaufdruck *Marking on cable*	H03VV-F 3G 0,5 mm² (max. 2 m)	H03VV-F 3G 0,75 mm²	H05VV-F 3G 0,75 mm²	H05VV-F 3G 1,0 mm²	H05VV-F 3G 1,5 mm²	H05RR-F 3G 0,75 mm²	H05RR-F 3G 1,0 mm²	H05RR-F 3G 1,5 mm²	H05RN-F 3G 0,75 mm²	H05RN-F 3G 1,0 mm²	H07RN-F 3G 1,0 mm²	H07RN-F 3G 1,5 mm²	H03RT-H 3G 0,75 mm²	H03RT-H 3G 1,0 mm²	H03V2V2-F 3G 0,75 mm²	H05V2V2-F 3G 0,75 mm²	H05V2V2-F 3G 1,0 mm²	H05V2V2-F 3G 1,5 mm²	05VAV5-F 3G 0,75 mm²	0VAV5-F 3G 1,0 mm²		
I-SHENG SGIS	---	X	X	X	---	---	---	---	---	---	---	---	---	---	---	---	---	---	---	---	---	---

genehmigte Ausführung / *approved version*: X nicht genehmigte Ausführung / *not approved version*: ---

Detailangaben siehe Anlage Nr.: *Details see appendix No.:*	803

VDE Prüf- und Zertifizierungsinstitut
Zeichengenehmigung

Rubrik / *Rubric*	Ausweis-Nr. / *Certificate No.*	Anlage / *Appendix*
341	40013526	703

Name und Sitz des Genehmigungs-Inhabers / *Name and registered seat of the Certificate holder*

I-Sheng Electric Wire & Cable, Co., Ltd., No. 52 Tin Hwu Road, Ta Hua Village, 33334 GWAI SAN, TAOYUAN HSIEN, Taiwan

Aktenzeichen / *File ref.*	letzte Änderung / *updated*	Datum / *Date*
1276300-1560-0003/310032/TL3/ROI	2023-12-21	2005-03-31

Dieses Blatt gilt nur in Verbindung mit Blatt 1 des Zeichengenehmigungsausweises Nr. 40013526 .
This supplement is only valid in conjunction with page 1 of the Certificate No. 40013526

Stecker mit Schutzkontakt, nicht wiederanschließbar, umspritzt
Plug, with earthing contact, non-rewirable, moulded

Typ(en) / *Type(s)*	SP-022

Fertigungsstätte / *Place of manufacture*	**30006554**
Kennzeichnung / *Identification*	**K**

Leitungsaufdruck *Marking on cable*	H03VV-F 3G 0,5 mm² (max. 2 m)	H03VV-F 3G 0,75 mm²	H05VV-F 3G 0,75 mm²	H05VV-F 3G 1,0 mm²	H05VV-F 3G 1,5 mm²	H05RR-F 3G 0,75 mm²	H05RR-F 3G 1,0 mm²	H05RR-F 3G 1,5 mm²	H05RN-F 3G 0,75 mm²	H05RN-F 3G 1,0 mm²	H07RN-F 3G 1,0 mm²	H07RN-F 3G 1,5 mm²	H03RT-H 3G 0,75 mm²	H03RT-H 3G 1,0 mm²	H03V2V2-F 3G 0,75 mm²	H05V2V2-F 3G 0,75 mm²	H05V2V2-F 3G 1,0 mm²	H05V2V2-F 3G 1,5 mm²	05VAV5-F 3G 0,75 mm²	0VAV5-F 3G 1,0 mm²		
I-SHENG KSIS	---	X	X	X	---	---	---	---	---	---	---	---	---	---	---	---	---	---	---	---	---	---

genehmigte Ausführung / *approved version*: X nicht genehmigte Ausführung / *not approved version*: ---

Detailangaben siehe Anlage Nr.: *Details see appendix No.:*	802

VDE Prüf- und Zertifizierungsinstitut
Zeichengenehmigung

Rubrik / *Rubric*	Ausweis-Nr. / *Certificate No.*	Anlage / *Appendix*
342	40013526	800

Name und Sitz des Genehmigungs-Inhabers / *Name and registered seat of the Certificate holder*

I-Sheng Electric Wire & Cable, Co., Ltd., No. 52 Tin Hwu Road, Ta Hua Village, 33334 GWAI SAN, TAOYUAN HSIEN, Taiwan

Aktenzeichen / *File ref.*	letzte Änderung / *updated*	Datum / *Date*
1276300-1560-0003/310032/TL3/ROI	2023-12-21	2005-03-31

Dieses Blatt gilt nur in Verbindung mit Blatt 1 des Zeichengenehmigungsausweises Nr. 40013526 .
This supplement is only valid in conjunction with page 1 of the Certificate No. 40013526

Stecker mit Schutzkontakt, nicht wiederanschließbar, umspritzt
Plug, with earthing contact, non-rewirable, moulded

Weitere Detailangaben zu Anlage Nr.: *Further details to appendix No.:*	700

Werkstoff der Umspritzung: Typ; Farbe *Material of the moulding: Type; Colour* Hersteller / *Manufacturer:*	PVC; Typ(e): TT-01; schwarz/ *black* DONGGUAN TAI TUNG ELECTRIC WIRE CO LTD

Inneneinsatz / *Insert* 1			
Typ; Hersteller / *Type; Manufacturer:*	Typ(e): P98651A-VDE GEM		
Stiftart / *Kind of pins:*	massiv / *solid*		
Werkstoff der Trägerteile: Typ; Hersteller; Farbe *Material of the base: Type; Manufacturer; Colour*	PBT; Typ(e): 4830; schwarz/ *black* Chang Chun Plastics Co., Ltd.		
Verwendeter Crimp / *Used crimp* 1	Vorderseite / *front*	Rückseite / *back*	Perspektivsche Ansicht / *perspective view*
L & N Kontakte / *L & N contacts*			
Erdkontakt / *earthing contact*			

VDE Prüf- und Zertifizierungsinstitut
Zeichengenehmigung

Rubrik / *Rubric*	Ausweis-Nr. / *Certificate No.*	Anlage / *Appendix*
342	40013526	801

Name und Sitz des Genehmigungs-Inhabers / *Name and registered seat of the Certificate holder*

I-Sheng Electric Wire & Cable, Co., Ltd., No. 52 Tin Hwu Road, Ta Hua Village, 33334 GWAI SAN, TAOYUAN HSIEN, Taiwan

Aktenzeichen / *File ref.*	letzte Änderung / *updated*	Datum / *Date*
1276300-1560-0003/310032/TL3/ROI	2023-12-21	2005-03-31

Dieses Blatt gilt nur in Verbindung mit Blatt 1 des Zeichengenehmigungsausweises Nr. 40013526 .
This supplement is only valid in conjunction with page 1 of the Certificate No. 40013526

Stecker mit Schutzkontakt, nicht wiederanschließbar, umspritzt
Plug, with earthing contact, non-rewirable, moulded

Weitere Detailangaben zu Anlage Nr.: *Further details to appendix No.:*	701

Werkstoff der Umspritzung: Typ; Farbe *Material of the moulding: Type; Colour* Hersteller / *Manufacturer:*	PVC; Typ(e): TT-01; schwarz/ *black* DONGGUAN TAI TUNG ELECTRIC WIRE CO LTD

Inneneinsatz / *Insert* 1			
Typ; Hersteller / *Type; Manufacturer:*	Typ(e): B05.008-D; Taller GmbH		
Stiftart / *Kind of pins:*	massiv / *solid*		
Werkstoff der Trägerteile: Typ; Hersteller; Farbe *Material of the base: Type; Manufacturer; Colour*	geprüft unter VDE-Az.:/ *approved under VDE-Ref.:* 1518100-1560-0006; schwarz/ *black*		
Verwendeter Crimp / *Used crimp* 1	Vorderseite / *front*	Rückseite / *back*	Perspektivsche Ansicht / *perspective view*
L & N Kontakte / *L & N contacts*			
Erdkontakt / *earthing contact*			

VDE Prüf- und Zertifizierungsinstitut
Zeichengenehmigung

Rubrik / *Rubric*	Ausweis-Nr. / *Certificate No.*	Anlage / *Appendix*
342	40013526	802

Name und Sitz des Genehmigungs-Inhabers / *Name and registered seat of the Certificate holder*

I-Sheng Electric Wire & Cable, Co., Ltd., No. 52 Tin Hwu Road, Ta Hua Village, 33334 GWAI SAN, TAOYUAN HSIEN, Taiwan

Aktenzeichen / *File ref.*	letzte Änderung / *updated*	Datum / *Date*
1276300-1560-0003/310032/TL3/ROI	2023-12-21	2005-03-31

Dieses Blatt gilt nur in Verbindung mit Blatt 1 des Zeichengenehmigungsausweises Nr. 40013526 .
This supplement is only valid in conjunction with page 1 of the Certificate No. 40013526

Stecker mit Schutzkontakt, nicht wiederanschließbar, umspritzt
Plug, with earthing contact, non-rewirable, moulded

Weitere Detailangaben zu Anlage Nr.: *Further details to appendix No.:*	702

Werkstoff der Umspritzung: Typ; Farbe *Material of the moulding: Type; Colour* Hersteller / *Manufacturer:*	PVC; Typ(e): TT-01; sdchwarz/ *black* DONGGUAN TAI TUNG ELECTRIC WIRE CO LTD

Inneneinsatz / *Insert* 1			
Typ; Hersteller / *Type; Manufacturer:*	Typ(e): SP-023 I-SHENG		
Stiftart / *Kind of pins:*	hohl / *hollow*		
Werkstoff der Trägerteile: Typ; Hersteller; Farbe *Material of the base: Type; Manufacturer; Colour*	PBT; Typ(e): 4830; schwarz/ *black* Chang Cun Plastics Co., Ltd.		
Verwendeter Crimp / *Used crimp* 1	Vorderseite / *front*	Rückseite / *back*	Perspektivsche Ansicht / *perspective view*
L & N Kontakte / *L & N contacts*			
Erdkontakt / *earthing contact*			

VDE Prüf- und Zertifizierungsinstitut
Zeichengenehmigung

Rubrik / *Rubric*	Ausweis-Nr. / *Certificate No.*	Anlage / *Appendix*
342	40013526	803

Name und Sitz des Genehmigungs-Inhabers / *Name and registered seat of the Certificate holder*

I-Sheng Electric Wire & Cable, Co., Ltd., No. 52 Tin Hwu Road, Ta Hua Village, 33334 GWAI SAN, TAOYUAN HSIEN, Taiwan

Aktenzeichen / *File ref.*	letzte Änderung / *updated*	Datum / *Date*
1276300-1560-0003/310032/TL3/ROI	2023-12-21	2005-03-31

Dieses Blatt gilt nur in Verbindung mit Blatt 1 des Zeichengenehmigungsausweises Nr. 40013526 .
This supplement is only valid in conjunction with page 1 of the Certificate No. 40013526

Stecker mit Schutzkontakt, nicht wiederanschließbar, umspritzt
Plug, with earthing contact, non-rewirable, moulded

Weitere Detailangaben zu Anlage Nr.: *Further details to appendix No.:*	703

Werkstoff der Umspritzung: Typ; Farbe *Material of the moulding: Type; Colour* Hersteller / *Manufacturer:*	PVC; Typ(e): TT-01; schwarz/ *black* DONGGUAN TAI TUNG ELECTRIC WIRE CO LTD

Inneneinsatz / *Insert* 1			
Typ; Hersteller / *Type; Manufacturer:*	Typ(e): SP-022; Aufschrift/ *marking*: IS; I-SHENG		
Stiftart / *Kind of pins:*	massiv / *solid* mit Stiftmaterial/ *with pin material:* Typ(e): PWZ61042; NINGBO POWERWAY ALLOY MATERIAL CO., LTD.		
Werkstoff der Trägerteile: Typ; Hersteller; Farbe *Material of the base: Type; Manufacturer; Colour*	PBT; Typ(e): 4830; schwarz/ *black* Chang Chun Plastics Co., Ltd.		
Verwendeter Crimp / *Used crimp* 1	Vorderseite / *front*	Rückseite / *back*	Perspektivsche Ansicht / *perspective view*
L & N Kontakte / *L & N contacts*			
Erdkontakt / *earthing contact*			

CERTIFICATE

Issued to:
Applicant:
I-Sheng Electric Wire & Cable Co., Ltd.
No. 50 & 52, Dinghu Rd., Dahua Vil., Guishan Dist.
33378 Taoyuan City, Taiwan

Licensee:
I-Sheng Electric Wire & Cable Co., Ltd.
No. 50 & 52, Dinghu Rd., Dahua Vil., Guishan Dist.
33378 Taoyuan City, Taiwan

Product	:	Plug, 2 pole, with earthing
Trade name(s)	:	I-SHENG
Type(s)/model(s)	:	SP-022

The product and any acceptable variation thereof as specified in the Annex to this certificate and the documents referred to therein.

DEKRA hereby declares that the above-mentioned product has been certified based on:
- a type test according to IEC 60884-1:2022, NEN 1020:2019, NEN-IEC 60884-1:2019, NEN-IEC 60884-1:2019/A1:2019, NEN-IEC 60884-1:2019/A2:2019, NF C 61-314:2017, DIN VDE 0620-2-1:2021-02, NBN C 61-112-1:2017, DS 60884-2-D1:2023, NEK IEC 60884-1:2002 + A1:2006, NEK IEC 60884-1:2002 + A1:2006/A2:2013, NEK 502:2016, NEK 502:2016/A1:2022, SFS 5610:2015, SFS 5610:2015/A11:2016, SS-IEC 60884-1:2013, SS 4280834:2013 and OVE E 8684-1:2021-12
- an inspection of the factory location according to CENELEC Operational Document CIG 021
- a DEKRA certification agreement with the number 901022

DEKRA hereby grants the right to use the KEMA-KEUR certification mark.

The KEMA-KEUR certification mark may be applied to the product as specified in this certificate for the duration and under the conditions of the KEMA-KEUR certification agreement.

This certificate is issued on 9 July 2024 and expires upon withdrawal of one of the above mentioned standards.

Certificate number: 35-115742 REV.1

DEKRA Certification B.V.

B.T.M. Holtus
Managing Director

K. Lin
Certification Manager

© Integral publication of this certificate is allowed

ACCREDITED BY THE
DUTCH ACCREDITATION
COUNCIL

PRODUCTS
RvA C 001

KEMA KEUR

SPECIFICATION OF THE CERTIFIED PRODUCT

Product data

Product	:	Plug, 2 pole, with earthing
Trade name(s)	:	I-SHENG
Type(s)/model(s)	:	SP-022
Rated current	:	16 A
Rated voltage	:	250 V~
Degree of protection	:	IP20
Design	:	Non-rewirable
Standard sheet	:	Standard sheet VII of NEN 1020
Applied flexible cord	:	H03VV-F 3G0,75 mm² H03V2V2-F 3G0,75 mm² H05VV-F 3G0,75, 3G1,0 and 3G1,5 mm² H05V2V2-F 3G0,75 and 3G1,0 mm² 05VA5V-F 3G0,75 and 3G1,0 mm² H05RR-F 3G0,75, 3G1,0 and 3G1,5 mm² H05RN-F 3G0,75 and 3G1,0 mm² H07RN-F 3G1,0 and 3G1,5 mm² H03Z1Z1-F 3G0,75 mm² H05Z1Z1-F 3G0,75, 3G1,0 and 3G1,5 mm²
Certification mark	:	Complies with the requirements
Cord termination	:	Crimped connection
Description	:	Straight type, body of thermoplastic material as part of an incomplete cord set for class I appliances

TESTS

Test requirements

IEC 60884-1:2022
NEN 1020:2019
NEN-IEC 60884-1:2019
NEN-IEC 60884-1:2019/A1:2019
NEN-IEC 60884-1:2019/A2:2019
NF C 61-314:2017
DIN VDE 0620-2-1:2021-02
NBN C 61-112-1:2017
DS 60884-2-D1:2023
NEK IEC 60884-1:2002 + A1:2006
NEK IEC 60884-1:2002 + A1:2006/A2:2013
NEK 502:2016
NEK 502:2016/A1:2022
SFS 5610:2015
SFS 5610:2015/A11:2016
SS-IEC 60884-1:2013
SS 4280834:2013
OVE E 8684-1:2021-12

Test result

The test results are documented in DEKRA test file 491859300.

Additional information

This certificate replaces certificate No. 35-115742 which we hereby declare invalid.

The list of components is laid down in test report 4918593.50.

Conclusion

The examination has confirmed that all requirements were met.

Factory locations

I-Sheng Manufacturing (Song Gang) Factory
Plant 1-3, No. 274 Guangtian Road, Tang Xia Yong Community, Songgang Street, Bao An District
518105 Shenzhen City, Guangdong, China

I-Sheng Electronics (Kunshan) Co., Ltd.
No. 888 Tai Shan Road, Kunshan Economic and Technological Development Zone
215300 Kunshan City, Jiangsu, China

I-Sheng Electric Wire & Cable Company (Vietnam)
Que Vo Industrial Park, Van Duong Ward,
16000 Bac Ninh City, Bac Ninh Province, Vietnam

I-Li Electric Wire & Cable (Viet Nam) Company Limited
Lot No. 9-2, 9-3, 9-5, 9-6, Calmette Avenue, Protrade International Tech Park, An Tay Commune
75908 Ben Cat City, Binh Duong, Vietnam

LICENCE

No. 22491 replaces No.18010

Issued to:
Applicant:
I-Sheng Electric Wire & Cable Co. Ltd.
52, Tin Hwu Road
Ta Gann Village, Gwai San Hsian
33334 Taoyuan City
Taiwan

Licensee:
I-Sheng Electric Wire & Cable Co. Ltd.
52, Tin Hwu Road
Ta Gann Village, Gwai San Hsian
33334 Taoyuan City
Taiwan

Product	:	plugs (2-pole) for household purposes
Trade name(s)	:	I-SHENG
Type(s)/model(s)	:	SP-022, SP-023

The product and any acceptable variation thereto is specified in the annex to this licence and the documents therein referred to.

SGS CEBEC hereby declares that the above-mentioned product has been certified on the basis of:
- a type test according to the standard specified in annex
- an inspection of the production location
- a certification agreement with the number 809

SGS CEBEC hereby grants the right to use the CEBEC certification mark
The CEBEC certification mark may be applied to the product as specified in this licence for the duration of the CEBEC certification agreement and under the conditions of the CEBEC certification agreement.

This licence is issued on : 21/03/2022

ir. C. Lana,
Certification Manager

© Only integral publication of this certificate, including the annex, is allowed
This certificate is only valid combined with the publication on the following web address: www.sgs.com/ee

005-PROD

SGS Belgium NV-Division SGS CEBEC
Business Riverside Park
Bld Internationalelaan 55 Build. K
B-1070 Brussels
Tel.+32(0)2 556 00 20 Fax.+32(0)2 556 00 36

This certificate is issued by the company under its General Conditions for Certification Services accessible at http://www.sgs.com/terms_and_conditions.htm. Attention is drawn to the limitations of liability defined therein and in the Test Report herein mentioned which findings are reflected in this Certificate. Any unauthorized alteration, forgery or falsification of the content or appearance of this document is unlawful and offenders may be prosecuted to the fullest extent of the law.

SPECIFICATION OF THE CERTIFIED PRODUCT

Product data

Product	:	plugs (2-pole) for household purposes
Trade name(s)	:	I-SHENG
Type(s)/Model(s)	:	SP-022, SP-023
rated current (In)	:	16 A
rated voltage (Un)	:	250 V~
class	:	for class I appliances
earthing	:	with dual earthing system
degree of protection	:	IP 20
standard sheet	:	VII of CEE7
description	:	body of thermoplastic material
cord(s) termination	:	crimped connection
certification mark	:	complies with the requirements
markings	:	are shown on the body

Additional information

Insert material: PBT type 4830 (E59481), Chang Chun Plastics
PBTtype 98651A-VDE, GEM
PBT (E332375) type J09-5H4, Jiadi

Insulation material for mould: PVC type TT-01 (E226994), Dongguan Tai Tung Electric Wire Co., Ltd

Factory identification:

I-Sheng Song Gang : C in a circle
I-Sheng Kunshan: K in a circle
I-Sheng Vietnam: V in a circle

SGS Belgium NV-Division SGS CEBEC
Business Riverside Park
Bld Internationalelaan 55 Build. K
B-1070 Brussels
Tel.+32(0)2 556 00 20 Fax.+32(0)2 556 00 36

Product data - type SP-022

design	:	non-rewirable straight cable entry
applied flexible cord(s)	:	H03VV-F 3G0.75 mm² H03V2V2-F 3G0.75 mm² H05VV-F 3G0.75-1.5 mm² H05RR-F 3G0.75-1.5 mm²
applied flexible cord(s) (cont'd)	:	H05RN-F 3G0.75-1.0 mm² H07RN-F 3G1.0-1.5 mm² 05VA5V-F 3G0.75-1.0 mm²
applied flexible cord(s) (cont'd II)	:	H05V2V2-F 3G0.75-1.0 mm² H03Z1Z1-F 3G0.75 mm² H05Z1Z1-F 3G0.75-1.5 mm²

Product data - type SP-023

design	:	non-rewirable angled cable entry
applied flexible cord(s)	:	H03VV-F 3G0.75 mm² H05VV-F 3G0.75-1.5 mm² H05RR-F 3G0.75-1.5 mm²
applied flexible cord(s) (cont'd)	:	H05RN-F 3G0.75-1.0 mm² H07RN-F 3G1.0-1.5 mm² 05VA5V-F 3G0.75-1.0 mm²
applied flexible cord(s) (cont'd II)	:	H03V2V2-F 3G0.75 mm² H05V2V2-F 3G0.75-1.0 mm²

TESTS

Test requirements

NBN C 61-112-1 ed. 2017 based on IEC 60884-1:2002 + A1:2006 + A2:2013

Test results

The test results are laid down in certification file ref.632583/01

Remarks

This certificate is based on certificates ref. CB FI-39295/M1, CB FI-42163/M1 and test reports ref. 293014.1, 299265-2, 293014-1 and 299265-2

SGS Belgium NV-Division SGS CEBEC
Business Riverside Park
Bld Internationalelaan 55 Build. K
B-1070 Brussels
Tel.+32(0)2 556 00 20 Fax.+32(0)2 556 00 36

Conclusion

The examination proved that all certification requirements were met.

Reviewed by, project leader : Luigi Zanutto - 21/03/2022

Certification Manager :



2022-03-21

SGS Belgium NV-Division SGS CEBEC
Business Riverside Park
Bld Internationalelaan 55 Build. K
B-1070 Brussels
Tel.+32(0)2 556 00 20 Fax.+32(0)2 556 00 36

FACTORY LOCATION(S)

I-Sheng Electric Wire & Cable Company (Vietnam)
Lot D4-2 Que Vo Road
Que Vo Industrial Park, Bac Ninh Province, Vietnam

I-Sheng Manufacturing (Song Gang) Factory
Tang Xia Yong Road, Songgang Town
Baoan Shenzhen 518105, Gungdong, China

I-Sheng Electronics (Kunshan) Co. Ltd.
No. 888, Tai Shan Road, Kunshan Development Zone
Kunshan City 215300, Jiang Su Province, China

DEMKO CERTIFICATE

Certificate No.	D-10693
Page	1/4
Date of Issue	2024-08-21
Certificate Holder	I-SHENG ELECTRIC WIRE & CABLE CO LTD 50 & 52 DINGHU RD DAHUA VLG GUISHAN DISTRICT TAOYUAN 333 TAIWAN
Production site	I-SHENG MFG (SONG GANG) FACTORY PLANT 1-3 274 GUANGTIAN RD TANG XIA YONG COMMUNITY SONGGANG ST BAO AN DISTRICT SHENZHEN, GUANGDONG, 518105 CHINA See Page 2 for additional information
Certified Product	Plug, non-rewirable
Model	SP-022, with cord H03VV-F 3G0,75 SP-022, with cord H03V2V2-F 3G0,75 SP-022, with cord H03Z1Z1-F 3G0,75 SP-022, with cord H05VV-F 3G0,75-1-1,5 SP-022, with cord H05V2V2-F 3G0,75-1 SP-022, with cord H05Z1Z1-F 3G0,75-1-1,5 SP-022, with cord 05VA5V-F 3G0,75-1 SP-022, with cord H05RN-F 3G0,75-1 SP-022, with cord H05RR-F 3G0,75-1-1,5 SP-022, with cord H07RN-F 3G1-1,5
Trademark	I-SHENG
Ratings	16 A, 250 V~, IP20
Tested according to	DS 60884-2-D1:2023
Test Report No.	FI/42101 issued on 2024-08-09
Additional	Standard sheet VII
Expire date	2029-08-09

Certification Manager
Thomas Wilson

This is to certify that representative sample(s) of the Product described herein ("Certified Product") have been investigated and found in compliance with the Standard(s) indicated on this Certificate, in accordance with the D-Mark Requirements. As specified in the respective appendix below the Designated Certificate holder is entitled to use the D-Mark, or its alternative for cables, for the Certified Product manufactured at the production site(s) identified above, in accordance with the D-Mark Service Agreement, including without limitation the D-Mark Testing and Certification Services Service Terms. Only those Products bearing the D-Mark should be considered as being covered by UL's D-Mark Service. This Certificate shall remain valid through the expiration date, unless terminated earlier in accordance with the Service Agreement including without limitation if the Standard identified on this Certificate is amended or withdrawn prior the expiration date.

Certification Body

UL International Demko A/S, Borupvang 5A, DK-2750 Ballerup, Denmark, Tel. +45 44 85 65 65, info.dk@ul.com www.UL.com

UL Solutions

Appendix DEMKO CERTIFICATE

Certificate No. D-10693
Page 2/4
Date of Issue 2024-08-21

Factories:
I-SHENG ELECTRIC WIRE & CABLE (VIETNAM)
QUE VO INDUSTRIAL PARK
VAN DUONG WARD BAC NINH CITY, BAC NINH,
VIETNAM

I-SHENG ELECTRONICS (KUNSHAN) CO LTD
888 TAI SHAN RD
KUNSHAN ECONOMIC & TECHNOLOGICAL DEVELOPMENT ZONE KUNSHAN, JIANGSU, 215300
CHINA

Appendix DEMKO CERTIFICATE

Certificate No. D-10693
Page 3/4
Date of Issue 2024-08-21

Certification Mark D-Mark

The D-Mark, as displayed below, shall appear on certified products only. Except as specified below the Mark shall be legible and no Minimum size is specified.

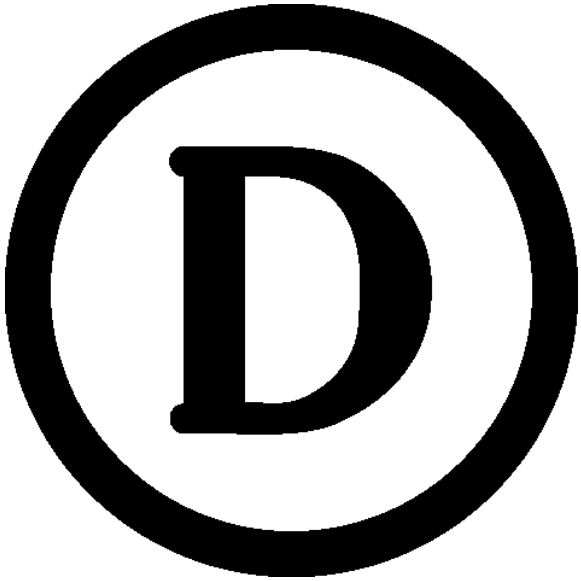

The size of the Mark may be reduced or enlarged on the condition that it remains readable and that the proportions of width and height are kept. The use of dark text for the D-Mark on light backgrounds and light text on dark backgrounds is permitted.

The D-Mark may appear on a label, nameplate, or may be cast, stamped or molded into the product. When appearing on a label or nameplate, the Manufacturer's name or trademark along with a model number are also required on that same label or nameplate. If cast, stamped or molded, the Certificate Manufacturer's name or trademark and model number shall also appear elsewhere on the product

When putting the product on the EU market, the manufacturer's name, trademark or mark of origin must be affixed in a clearly visible location and position on the product, on the package and in the user manual. It can be affixed by label, be directly imprinted, or cast or molded into the product.

Where the size of the product does not allow the Mark, the manufacturer's name, trademark, mark of origin and model number to be legible, and appearance on a label is not desired, it is allowed to cast, stamp or mold the Mark into the product, in a size which is not visible to the naked eye, provided the legible Mark, the manufacturer's name, trademark or mark of origin and model number appears on the package and in the user manual

Certification Body

UL International Demko A/S, Borupvang 5A, DK-2750 Ballerup, Denmark, Tel. +45 44 85 65 65, info.dk@ul.com
www.UL.com

UL Solutions

Appendix DEMKO CERTIFICATE

Certificate No. D-10693
Page 4/4
Date of Issue 2024-08-21

Alternate certification Mark for cables

As an alternative to the D-Mark specified above the alternate D-Mark, displayed below, can appear on certified cables only. Minimum size is not specified, as long as the mark is legible.

◅DEMKO▻

The alternate D-Mark may be cast, stamped or molded into the cable and continue throughout the length of the cable as specified in the applicable cable standard.

All content shall be in accordance with the details provided on this D-Mark Certificate.

Certification Body

UL International Demko A/S, Borupvang 5A, DK-2750 Ballerup, Denmark, Tel. +45 44 85 65 65, info.dk@ul.com www.UL.com

UL Solutions

CERTIFICATE

FOR EUROPEAN PRODUCT SAFETY

Reference No. SE-S-2002017R2

Plug, non-rewirable

Type designation: SP-022

Certificate holder: I-Sheng Electric Wire & Cable Co., Ltd.
No. 50 & 52, Dinghu Rd., Dahua Vil., Guishan Dist.,
333 Taoyuan City Taiwan

The product complies with the standard(s):
IEC 60884-1:2002+A1+A2
SFS 5610:2015+A11
SFS 5610:2015 + A11:2016
DS 60884-2-D1:2023
NEK IEC 60884-1:2002 + NEK 502:2016
SS 428 08 34:2013

Date of expiry: 09 August, 2029

Additional information in Appendix

Certification Body: Intertek Semko AB, Product Certification **Place:** Kista - Stockholm

Signed: **Date:** 14 August, 2024

Quan Li

This Certificate is for the exclusive use of Intertek's client and is provided pursuant to the agreement between Intertek and its Client. Intertek's responsibility and liability are limited to the terms and conditions of the agreement. Intertek assumes no liability to any party, other than to the Client in accordance with the agreement, for any loss, expense or damage occasioned by the use of this Certificate. Only the Client is authorized to permit copying or distribution of this Certificate and then only in its entirety. Any use of the Intertek name or one of its marks for the sale or advertisement of the tested material, product or service must first be approved in writing by Intertek. This certificate is not issued under accreditation, by a non-approved body.

APPENDIX:

Reference No. SE-S-2002017R2

Technical Data:

Type designation	SP-022
Rated voltage (V)	250V~
Rated current (A)	16A
IP-Class	20
Standard sheet	Standard sheet VII
Trademark	I-SHENG
Test Report	4918593.50
Product information	SP-022, with cord H03VV-F 3G0,75 SP-022, with cord H03V2V2-F 3G0,75 SP-022, with cord H03Z1Z1-F 3G0,75 SP-022, with cord H05VV-F 3G0,75-1-1,5 SP-022, with cord H05V2V2-F 3G0,75-1 SP-022, with cord H05Z1Z1-F 3G0,75-1-1,5 SP-022, with cord 05VA5V-F 3G0,75-1 SP-022, with cord H05RN-F 3G0,75-1 SP-022, with cord H05RR-F 3G0,75-1-1,5 SP-022, with cord H07RN-F 3G1-1,5

Manufacturing Sites:

I-Sheng Manufacturing (Song Gang) Factory
Plant 1-3, No 274 Guangtian Road, Tang Xia Yong Community, Songgang Street, Bao An District, Shenzhen, Guangdong, China

I-Sheng Electric Wire & Cable (Vietnam)
Que Vo Industrial Park, Van Duong Ward, Bac Ninh City,
BAC NINH PROVINCE, Viet Nam

I-Sheng Electronics (Kunshan) Co., Ltd.
No. 888, Tai Shan Road, Kunshan Economic and Technological Development Zone, Kunshan, Jiangsu, China

I-LI ELECTRIC WIRE & CABLE (VIETNAM) COMPANY LIMITED
Lot No. 9-2, 9-3, 9-5, 9-6, Calmette Avenue, Protrade International Tech Park, An Tay Commune, 75908, Ben Cat Town, Binh Duong, Viet Nam

This Certificate is for the exclusive use of Intertek's client and is provided pursuant to the agreement between Intertek and its Client. Intertek's responsibility and liability are limited to the terms and conditions of the agreement. Intertek assumes no liability to any party, other than to the Client in accordance with the agreement, for any loss, expense or damage occasioned by the use of this Certificate. Only the Client is authorized to permit copying or distribution of this Certificate and then only in its entirety. Any use of the Intertek name or one of its marks for the sale or advertisement of the tested material, product or service must first be approved in writing by Intertek. This certificate is not issued under accreditation, by a non-approved body.

APPENDIX:

Reference No. SE-S-2002017R2

This certificate is based on the certificate with Ref. No. FI/42101 dated 09 August 2024 issued by SGS Fimko Ltd. according to the Nordic Certification Service agreement.

This certificate replaces the earlier certificate SE-S-2002017R1 dated 02 August 2024 due to renewal of the certificate.

Certification Body:	Intertek Semko AB, Product Certification	**Place:**	Kista - Stockholm
Signed:		**Date:**	14 August, 2024
	Quan Li		

This Certificate is for the exclusive use of Intertek's client and is provided pursuant to the agreement between Intertek and its Client. Intertek's responsibility and liability are limited to the terms and conditions of the agreement. Intertek assumes no liability to any party, other than to the Client in accordance with the agreement, for any loss, expense or damage occasioned by the use of this Certificate. Only the Client is authorized to permit copying or distribution of this Certificate and then only in its entirety. Any use of the Intertek name or one of its marks for the sale or advertisement of the tested material, product or service must first be approved in writing by Intertek. This certificate is not issued under accreditation, by a non-approved body.

CERTIFICATE

P24227779

Applicant	I-Sheng Electric Wire & Cable Co., Ltd. No 50 & 52, Dinghu Rd. Dahua Vil., Guishan Dist. Taoyuan City 333 Taiwan
Manufacturer	I-Sheng Electric Wire & Cable Co., Ltd. No 50 & 52, Dinghu Rd. Dahua Vil., Guishan Dist. Taoyuan City 333 Taiwan
Factory	See next pages
Project Number	PRJ0063895
Product	Plug, non-rewirable
Model/Type Ref.	SP-022
Ratings	16A 250V AC
Brandname / Trademark	I-SHENG
Principal Characteristics	Non-rewirable plug with cord H03VV-F 3G0,75 mm². Standard sheet VII. IP20
A sample of the product was tested and found to be in conformity with	Safety IEC 60884-1:2022 NEK 502:2016/AMD1:2022
Validity	*This certificate documents conformity with the standards shown, and also applies as license for use of Nemko's name and certification mark. The certificate and license is valid as long as the applicable conditions are complied with, and provided that any changes to the product are notified to Nemko for acceptance prior to implementation.* *New standards or amendments to the standards may imply that the product design must be updated and/or that re-testing and re-certification is necessary.*
Additional Information	
Additional model(s)	See next pages

Signature

Jiyea Gim

Jiyea Gim

Certification department

Date of Issue

2024-08-12

Working for a more sustainable future
Please do not print

Nemko Group AS
Philip Pedersens vei 11
1366 Lysaker, Norway
TEL +47 22 96 03 30
info@nemko.com
ENTERPRISE NUMBER
NO974404532

www.nemko.com

CERTIFICATE

P24227779

Product	Plug, non-rewirable
Variant	1
Model/Type Ref.	SP-022
Ratings.	16A 250V AC
Brandname / Trademark (if different from page 1)	I-SHENG
Principal Characteristics	Non-rewirable plug with cord H03V2V2-F 3G0,75 mm². Standard sheet VII. IP20
Product	Plug, non-rewirable
Variant	2
Model/Type Ref.	SP-022
Ratings.	16A 250V AC
Brandname / Trademark (if different from page 1)	I-SHENG
Principal Characteristics	Non-rewirable plug with cord H03Z1Z1-F 3G0,75 mm². Standard sheet VII. IP20
Product	Plug, non-rewirable
Variant	3
Model/Type Ref.	SP-022
Ratings.	16A 250V AC
Brandname / Trademark (if different from page 1)	I-SHENG
Principal Characteristics	Non-rewirable plug with cord H05VV-F 3G0,75-1-1,5 mm². Standard sheet VII. IP20
Product	Plug, non-rewirable
Variant	4
Model/Type Ref.	SP-022
Ratings.	16A 250V AC
Brandname / Trademark (if different from page 1)	I-SHENG
Principal Characteristics	Non-rewirable plug with cord H05V2V2-F 3G0,75-1 mm². Standard sheet VII. IP20

Signature

Jiyea Gim

Jiyea Gim

Certification department

Date of Issue 2024-08-12

Nemko Group AS
Philip Pedersens vei 11
1366 Lysaker, Norway
TEL +47 22 96 03 30
info@nemko.com
ENTERPRISE NUMBER
NO974404532

www.nemko.com

Working for a more sustainable future
Please do not print

CERTIFICATE

P24227779

Product	Plug, non-rewirable
Variant	5
Model/Type Ref.	SP-022
Ratings.	16A 250V AC
Brandname / Trademark (if different from page 1)	I-SHENG
Principal Characteristics	Non-rewirable plug with cord H05Z1Z1-F 3G0,75-1-1,5 mm². Standard sheet VII. IP20
Product	Plug, non-rewirable
Variant	6
Model/Type Ref.	SP-022
Ratings.	16A 250V AC
Brandname / Trademark (if different from page 1)	I-SHENG
Principal Characteristics	Non-rewirable plug with cord 05VA5V-F 3G0,75-1 mm². Standard sheet VII. IP20
Product	Plug, non-rewirable
Variant	7
Model/Type Ref.	SP-022
Ratings.	16A 250V AC
Brandname / Trademark (if different from page 1)	I-SHENG
Principal Characteristics	Non-rewirable plug with cord H05RN-F 3G0,75-1 mm². Standard sheet VII. IP20
Product	Plug, non-rewirable
Variant	8
Model/Type Ref.	SP-022
Ratings.	16A 250V AC
Brandname / Trademark (if different from page 1)	I-SHENG
Principal Characteristics	Non-rewirable plug with cord H05RR-F 3G0,75-1-1,5 mm². Standard sheet VII. IP20

Signature

Jiyea Gim

Jiyea Gim

Certification department

Date of Issue

2024-08-12

Nemko Group AS
Philip Pedersens vei 11
1366 Lysaker, Norway
TEL +47 22 96 03 30
info@nemko.com
ENTERPRISE NUMBER
NO974404532

Working for a more sustainable future
Please do not print

www.nemko.com

CERTIFICATE

P24227779

Product	Plug, non-rewirable
Variant	9
Model/Type Ref.	SP-022
Ratings.	16A 250V AC
Brandname / Trademark (if different from page 1)	I-SHENG
Principal Characteristics	Non-rewirable plug with cord H07RN-F 3G1-1,5 mm². Standard sheet VII. IP20

Factories

I-Sheng Manufacturing (Songgang) Factory
Plant 1-3, No 274 Guangtian Road, Tang Xia Yong Community, Songgang Street, Bao An District
Shenzhen Guangdong Province
China

I-Sheng Electronics (Kunshan) Co., Ltd.
No. 888, Tai Shan Road, Kunshan Economic and Technological Development Zone,
Kunshan City Jiangsu Province 215300
China

I-Sheng Electric Wire & Cable Company (Vietnam)
Que Vo Industrial Park, Van Duong Ward, Bac Ninh City
Bac Ninh Province
Viet Nam

Signature

Jiyea Gim

Jiyea Gim

Certification department

Date of Issue

2024-08-12

Working for a more sustainable future
Please do not print

Nemko Group AS
Philip Pedersens vei 11
1366 Lysaker, Norway
TEL +47 22 96 03 30
info@nemko.com
ENTERPRISE NUMBER
NO974404532

www.nemko.com

CERTIFICATE FI/42101

Our Ref. HEL-CERT190800565-07

Product	Plug, non-rewirable
Type	SP-022, with cord H03VV-F 3G0,75 SP-022, with cord H03V2V2-F 3G0,75 SP-022, with cord H03Z1Z1-F 3G0,75 SP-022, with cord H05VV-F 3G0,75-1-1,5 SP-022, with cord H05V2V2-F 3G0,75-1 SP-022, with cord H05Z1Z1-F 3G0,75-1-1,5 SP-022, with cord 05VA5V-F 3G0,75-1 SP-022, with cord H05RN-F 3G0,75-1 SP-022, with cord H05RR-F 3G0,75-1-1,5 SP-022, with cord H07RN-F 3G1-1,5
Trademark	I-SHENG
Certificate Holder	I-Sheng Electric Wire & Cable Co., Ltd. No 50 & 52, Dinghu Rd., Dahua Vil., Guishan Dist., Taoyuan City, 333, Taiwan
Technical information	16 A, 250 V~, IP20
Other information	Standard sheet VII
The product is certified according to the following standard(s)	IEC 60884-1:2022 SFS 5610:2015 + A11:2016
Validity	This certificate is valid until 09 August 2029 provided that the Conditions for FI certification are met. This certificate includes the right to use the FI mark under the condition that changes (if any) will be checked at SGS Fimko before the product is brought onto market and that the conditions for FI certification are met.
Date of issue	09 August 2024
	SGS Fimko Ltd
Signature	Niklas Rönnqvist Certification Manager

This document is issued by the Company under its General Conditions of Service accessible at http://www.sgs.com/terms_and_conditions.htm. Attention is drawn to the limitation of liability, indemnification and jurisdiction issues defined therein.

Any holder of this document is advised that information contained hereon reflects the Company's findings at the time of its intervention only and within the limits of Client's instructions, if any. The Company's sole responsibility is to its Client and this document does not exonerate parties to a transaction from exercising all their rights and obligations under the transaction documents. Any unauthorized alteration, forgery or falsification of the content or appearance of this document is unlawful and offenders may be prosecuted to the fullest extent of the law.

SGS Fimko Ltd
Takomotie 8, FI-00380 Helsinki, Finland
t. +358 9 696 361 www.sgs.fi
Business ID 0978538-5 Member of the SGS Group (SGS SA)

Manufacturer	I-Sheng Electric Wire & Cable Co., Ltd. No 50 & 52, Dinghu Rd., Dahua Vil., Guishan Dist., Taoyuan City, 333, Taiwan
Manufacturing site	I-Sheng Manufacturing (Song Gang) Factory Plant 1-3, No 274 Guangtian Road, Tang Xia Yong Community, Songgang Street, Bao An District, Shenzhen, Guangdong, China I-Sheng Electric Wire & Cable (Vietnam) Que Vo Industrial Park, Van Duong Ward, Bac Ninh City, BAC NINH PROVINCE, Viet Nam I-Sheng Electronics (Kunshan) Co., Ltd. No. 888, Tai Shan Road, Kunshan Economic and Technological Development Zone, Kunshan, Jiangsu, China I-LI ELECTRIC WIRE & CABLE (VIETNAM) COMPANY LIMITED Lot No. 9-2, 9-3, 9-5, 9-6, Calmette Avenue, Protrade International Tech Park, An Tay Commune, 75908, Ben Cat Town, Binh Duong, Viet Nam
Additional information	The products have certificate no. NL-108973 issued by DEKRA Certification B.V. in accordance with the CB system. This certificate replaces previous certificate FI/40359/A1, dated 2022-12-19, due to renewal of the certificate.
As shown in the Test Report(s) No(s):	4918593.50

FINAS
Finnish Accreditation Service
S003 (EN ISO/IEC 17065)

This document is issued by the Company under its General Conditions of Service accessible at http://www.sgs.com/terms_and_conditions.htm. Attention is drawn to the limitation of liability, indemnification and jurisdiction issues defined therein.

Any holder of this document is advised that information contained hereon reflects the Company's findings at the time of its intervention only and within the limits of Client's instructions, if any. The Company's sole responsibility is to its Client and this document does not exonerate parties to a transaction from exercising all their rights and obligations under the transaction documents. Any unauthorized alteration, forgery or falsification of the content or appearance of this document is unlawful and offenders may be prosecuted to the fullest extent of the law.

SGS Fimko Ltd
Takomotie 8, FI-00380 Helsinki, Finland
t. +358 9 696 361 www.sgs.fi
Business ID 0978538-5 Member of the SGS Group (SGS SA)

OVE Austrian Electrotechnical Association
Eschenbachgasse 9 | 1010 Wien | Austria
ZVR: 327279890 | www.ove.at

OVE Certification
Kahlenberger Str. 2A | 1190 Wien | Austria
T +43 1 370 58 06 | certification@ove.at

Validity of ÖVE-Certificates can be checked at www.ove.at

ÖVE-CERTIFICATE

including the entitlement to use the Austrian Safety Mark

Certificate No.: **8556-003-17**

Valid from: 2023 10 27
until: 2025 10 27

The Austrian Electrotechnical Association (OVE) hereby grants the right to the company mentioned below to label the listed products with the Austrian Safety Mark.

Certificate holder: **I-SHENG ELECTRIC WIRE & CABLE Co.Ltd**
No. 50 & 52, Dinghu Road, Dahua Village, Guishan District
333 Taoyuan City
Taiwan

Product: **Non rewirable two pole plug with dual earthing system**

The products submitted by the applicant were type tested in accordance with the requirements of the technical standards and specifications listed in this certificate. OVE certifies the conformity of the listed products and those products manufactured strictly identical to the submitted ones (EN ISO/IEC 17067, Conformity Assessment Scheme Type 5).

The manufacturing process and the products are subject to ongoing surveillance based on harmonized European procedures. This certificate has been issued under the presumption and conditional on the fact that the certificate holder holds all necessary legal rights with regard to the product, presented for the testing and certification.

Results of testing are shown in file No(s).: **3779-723/99-NA2**

Österreichischer Verband für Elektrotechnik
Head of OVE Certification

T. Neuma

Digitally signed by T. Neumayer
Email=t.neumayer@ove.at

Wien, 2023 10 12

Dipl.-Ing. T. Neumayer

Manufacturer:

I-SHENG ELECTRIC WIRE & CABLE Co.Ltd
No. 50 & 52, Dinghu Road, Dahua Village, Guishan District
333 Taoyuan City
Taiwan

Factory location(s):

I-SHENG MANUFACTURING (Song Gang) Factory
Plant 1-3, No. 274 Guangtian Road, Tang Xia Yong Community, Songgang Street
518105 Bao An District, Shenzhen Guangdong
China

I-SHENG Electronics (Kunshan) Co., Ltd.
No. 888, Tai Shan Road, Kunshan Economic and Technological Development Zone,
215300 Kunshan City, Jiang Su Province
China

I-Sheng Electric Wire & Cable (Vietnam)
Que Vo Industrial Park, Van Duong Ward,
Bac Ninh City, Bac Ninh Province
Viet Nam

Tested and certified according to:

OVE E 8684-1:2019-12-01
OVE E 8684-1:2021-12-01

Product: Non rewirable two pole plug with dual earthing system

Type designation: *Rating:*	***Trademark:***
SP-022 Rated voltage: AC 250 V Rated current: 16 A H03VV-F 3 G 0,75	I-SHENG
SP-022 Rated voltage: AC 250 V Rated current: 16 A H05VV-F 3 G 0,75	I-SHENG
SP-022 Rated voltage: AC 250 V Rated current: 16 A H05VV-F 3 G 1	I-SHENG

SP-022 I-SHENG
Rated voltage: AC 250 V
Rated current: 16 A
H05VV-F 3 G 1,5

SP-022 I-SHENG
Rated voltage: AC 250 V
Rated current: 16 A
H05RR-F 3 G 0,75

SP-022 I-SHENG
Rated voltage: AC 250 V
Rated current: 16 A
H05RR-F 3 G 1

SP-022 I-SHENG
Rated voltage: AC 250 V
Rated current: 16 A
H05RR-F 3 G 1,5

SP-022 I-SHENG
Rated voltage: AC 250 V
Rated current: 16 A
H05RN-F 3 G 0,75

SP-022 I-SHENG
Rated voltage: AC 250 V
Rated current: 16 A
H05RN-F 3 G 1

SP-022 I-SHENG
Rated voltage: AC 250 V
Rated current: 16 A
05VA5V-F 3 G 0,75

SP-022 I-SHENG
Rated voltage: AC 250 V
Rated current: 16 A
05VA5V-F 3 G 1

SP-022 I-SHENG
Rated voltage: AC 250 V
Rated current: 16 A
H05Z1Z1-F 3 G 0,75

SP-022 I-SHENG
Rated voltage: AC 250 V
Rated current: 16 A
H05Z1Z1-F 3 G 1

SP-022 I-SHENG
Rated voltage: AC 250 V
Rated current: 16 A
H05Z1Z1-F 3 G 1,5

SP-022 I-SHENG
Rated voltage: AC 250 V
Rated current: 16 A
H07RN-F 3 G 1

SP-022 I-SHENG
Rated voltage: AC 250 V
Rated current: 16 A
H07RN-F 3 G 1,5

SP-022 I-SHENG
Rated voltage: AC 250 V
Rated current: 16 A
H03Z1Z1-F 3 G 0,75

SP-023 I-SHENG
Rated voltage: AC 250 V
Rated current: 16 A
H03VV-F 3 G 0,75

SP-023 I-SHENG
Rated voltage: AC 250 V
Rated current: 16 A
H05VV-F 3 G 0,75

SP-023 I-SHENG
Rated voltage: AC 250 V
Rated current: 16 A
H05VV-F 3 G 1

SP-023 I-SHENG
Rated voltage: AC 250 V
Rated current: 16 A
H05VV-F 3 G 1,5

SP-023 I-SHENG
Rated voltage: AC 250 V
Rated current: 16 A
H05RR-F 3 G 0,75

SP-023 I-SHENG
Rated voltage: AC 250 V
Rated current: 16 A
H05RR-F 3 G 1

SP-023 I-SHENG
Rated voltage: AC 250 V
Rated current: 16 A
H05RR-F 3 G 1,5

SP-023 I-SHENG
Rated voltage: AC 250 V
Rated current: 16 A
H05RN-F 3 G 0,75

SP-023 I-SHENG
Rated voltage: AC 250 V
Rated current: 16 A
H05RN-F 3 G 1

SP-023 I-SHENG
Rated voltage: AC 250 V
Rated current: 16 A
05VA5V-F 3 G 0,75

SP-023 I-SHENG
Rated voltage: AC 250 V
Rated current: 16 A
05VA5V-F 3 G 1

SP-023 I-SHENG
Rated voltage: AC 250 V
Rated current: 16 A
H07RN-F 3 G 1

SP-023 I-SHENG
Rated voltage: AC 250 V
Rated current: 16 A
H07RN-F 3 G 1,5

IMQ S.p.A. - Società con Socio Unico
I-20138 Milano - via Quintiliano, 43
tel. 0250731 (r.a.)
e-mail: info@imq.it - www.imq.it

Rea Milano 1595884
Registro Imprese Milano 12898410159
C.F./P.I. 12898410159
Capitale Sociale € 4.000.000

E5303

DAT94004220

PID:
02113100

CID:
C.1993.495

Certificato di approvazione

Approval certificate

ACCREDIA
L'ENTE ITALIANO DI ACCREDITAMENTO

PRD N° 005B

Membro degli Accordi di Mutuo Riconoscimento EA, IAF e ILAC
Signatory of EA, IAF and ILAC Mutual Recognition Agreements

IMQ, ente di certificazione accreditato, autorizza la ditta

IMQ, accredited certification body, grants to

I SHENG ELECTRIC WIRE & CABLE CO. LTD
No. 50 & 52, Dinghu Rd., Dahua Vil., Guishan Dist.
333 Taoyuan City
TW - Taiwan

all'uso del marchio

the licence to use the mark

IMQ

Il presente certificato è soggetto alle condizioni previste nel Regolamento "MARCHI IMQ - Regolamento per la certificazione di prodotti" ed è relativo ai prodotti descritti nell'Allegato al presente certificato.

per i seguenti prodotti

Spine indissolubilmente collegate al cavo
(Rif. di tipo SP-022)

for the following products

Non-rewirable plugs
(Type ref. SP-022)

This certificate is subjected to the conditions foreseen by Rules "IMQ MARKS - RULES for product certification" and is relevant to the products listed in the annex to this certificate.

Emesso il | Issued on ***1989-02-27***

Aggiornato il | Updated on ***2023-03-06***

Sostituisce | Replaces ***2022-11-07***

IMQ S.p.A.

IMQ S.p.A. - Società con Socio Unico
I-20138 Milano - via Quintiliano, 43
tel. 0250731 (r.a.)
e-mail: info@imq.it - www.imq.it

Rea Milano 1595884
Registro Imprese Milano 12898410159
C.F./P.I. 12898410159
Capitale Sociale € 4.000.000

Allegato - Certificato di approvazione
Annex - Approval certificate

Emesso il | Issued on	1989-02-27
Aggiornato il | Updated on	2023-03-06
Sostituisce | Replaces	2022-11-07

Prodotto | Product

Spine indissolubilmente collegate al cavo
Non-rewirable plugs

Concessionario | Licence Holder

I SHENG ELECTRIC WIRE & CABLE CO. LTD
No. 50 & 52, Dinghu Rd., Dahua Vil., Guishan Dist.
333 Taoyuan City
TW - Taiwan

Marchio | Mark

IMQ

Costruito a | Manufactured at

98001045	CLISHE.C02LCISHE+1		Bao An Dis.,Shenzhen City,Guangdong Pr.	China
98001046	CLISHE.C02LCISHE+2	215300	Kunshan City, Jiangsu Province	China
PI.J00091	C02702551		Bac Ninh City, Bac Ninh Province	Viet Nam

Copia del presente certificato deve essere conservata presso i luoghi di produzione sopra elencati.

Copy of this certificate must be available at the manufacturing places listed above

Norme / Specifiche tecniche

Prodotto/i conforme/i alle Norme/Specifiche tecniche:

CEI 23-50 - II Ed. 2007 + V1:2008 + V2:2011 + V3:2015

Standards / Technical specifications

Product/s complying to Standards/Technical specifications:

CEI 23-50 - II Ed. 2007 + V1:2008 + V2:2011 + V3:2015

Rapporti | Test Reports

MI23-0087754-01

Caratteristiche tecniche | Technical characteristics

Designazione | Type designation	**2P+T+T S31 / 2P+E+E S31**
Tensione nominale | Rated voltage	**250 V**
Corrente nominale | Rated current	**16 A**
Grado di protezione | Degree of protection (IP)	**IP20**
Tipo di morsetti | Type of terminals	**morsetti aggraffati / crimped connections**
Materiale della custodia | Material of the cover	**isolante / insulating**
Uscita cavo | Cable exit	**assiale / straight**

Articoli (con dettagli) | Articles (with details)

DAT94004220.1

Marca | Trade mark	**I-SHENG**
Riferimento di tipo | Type reference	**SP-022**
Tipo di cavo | Type of cable	**H03VV-F**
Sezione nominale | Section areas	**3G0,75 mm²**

DAT94004220.2

Marca | Trade mark	**I-SHENG**
Riferimento di tipo | Type reference	**SP-022**
Tipo di cavo | Type of cable	**H05VV-F**
Sezione nominale | Section areas	**3G0,75 mm²**

DAT94004220.3

Marca | Trade mark **I-SHENG**
Riferimento di tipo | Type reference **SP-022**
Tipo di cavo | Type of cable **H05VV-F**
Sezione nominale | Section areas **3G1,00 mm²**

DAT94004220.4

Marca | Trade mark **I-SHENG**
Riferimento di tipo | Type reference **SP-022**
Tipo di cavo | Type of cable **H05VV-F**
Sezione nominale | Section areas **3G1,50 mm²**

AR.F0010X

Marca | Trade mark **I-SHENG**
Riferimento di tipo | Type reference **SP-022**
Tipo di cavo | Type of cable **H05RR-F**
Sezione nominale | Section areas **3G0,75 mm²**

AR.F0010Y

Marca | Trade mark **I-SHENG**
Riferimento di tipo | Type reference **SP-022**
Tipo di cavo | Type of cable **H05RR-F**
Sezione nominale | Section areas **3G1,00 mm²**

AR.F0010Z

Marca | Trade mark **I-SHENG**
Riferimento di tipo | Type reference **SP-022**
Tipo di cavo | Type of cable **H05RR-F**
Sezione nominale | Section areas **3G1,50 mm²**

AR.F00110

Marca | Trade mark **I-SHENG**
Riferimento di tipo | Type reference **SP-022**
Tipo di cavo | Type of cable **H05RN-F**
Sezione nominale | Section areas **3G0,75 mm²**

AR.F00111

Marca | Trade mark **I-SHENG**
Riferimento di tipo | Type reference **SP-022**
Tipo di cavo | Type of cable **H05RN-F**
Sezione nominale | Section areas **3G1,00 mm²**

AR.F00112

Marca | Trade mark **I-SHENG**
Riferimento di tipo | Type reference **SP-022**
Tipo di cavo | Type of cable **H07RN-F**
Sezione nominale | Section areas **3G1,00 mm²**

AR.F00113

Marca | Trade mark **I-SHENG**
Riferimento di tipo | Type reference **SP-022**
Tipo di cavo | Type of cable **H07RN-F**
Sezione nominale | Section areas **3G1,50 mm²**

AR.H00E8M

Marca | Trade mark **I-SHENG**
Riferimento di tipo | Type reference **SP-022**
Tipo di cavo | Type of cable **05VA5V-F**
Sezione nominale | Section areas **3G0,75 mm²**

AR.H00E8N

Marca | Trade mark **I-SHENG**
Riferimento di tipo | Type reference **SP-022**
Tipo di cavo | Type of cable **05VA5V-F**
Sezione nominale | Section areas **3G1,00 mm²**

AR.J003MV

Marca | Trade mark	**I-SHENG**
Riferimento di tipo | Type reference	**SP-022**
Tipo di cavo | Type of cable	**H05Z1Z1-F**
Sezione nominale | Section areas	**3G0,75 mm²**

AR.J003MW

Marca | Trade mark	**I-SHENG**
Riferimento di tipo | Type reference	**SP-022**
Tipo di cavo | Type of cable	**H05Z1Z1-F**
Sezione nominale | Section areas	**3G1,00 mm²**

AR.J003MX

Marca | Trade mark	**I-SHENG**
Riferimento di tipo | Type reference	**SP-022**
Tipo di cavo | Type of cable	**H05Z1Z1-F**
Sezione nominale | Section areas	**3G1,50 mm²**

AR.L004IL

Marca | Trade mark	**I-SHENG**
Riferimento di tipo | Type reference	**SP-022**
Tipo di cavo | Type of cable	**H03Z1Z1-F**
Sezione nominale | Section areas	**3G0,75 mm²**

Ulteriori informazioni | Additional Information

Le spine sono marcate con il seguente suffisso aggiuntivo che identifica il luogo di produzione:
C = I-SHENG Manufacturing (Song Gang) China;
K = I-SHENG Electric Wire & Plastic (Kunshan) China;
V = I-SHENG Electric Wire & Cable (Bac Ninh) Vietnam.

La spina rif. di tipo SP-022 è prodotta con il seguente inserto:
Marca: GEM, art. 98651A-VDE, colore nero
oppure
Marca: I-SHENG, art. MB023112, colore nero
La spina indissolubilmente collegata ai cavi H03Z1Z1-F e H05Z1Z1-F riporta un'ulteriore marcatura (SP-022.) per distinguerla dalla spina indissolubilmente collegata ai cavi H03VV-F e H05VV-F.

The plugs are marked with the following additional suffix which identifies the manufacturing location:
C = I-SHENG Manufacturing (Song Gang) China;
K = I-SHENG Electric Wire & Plastic (Kunshan) China;
V = I-SHENG Electric Wire & Cable (Bac Ninh) Vietnam.

The plug type ref. SP-022 is manufactured with the following insert:
Trade mark GEM, art. 98651A-VDE, black colour
or
Trade mark I-SHENG, art. MB023112, black colour

The non-rewirable plug with cables H03Z1Z1-F and H05Z1Z1-F is moreover marked (SP-022.) in order to distinguish from the non-rewirable plug with cables H03VV-F and H05VV-F.

Componenti | Component List

Type ref. SP-022

Tipo | Type	*(*)*	*Costruttore | Manufacturer*	*Riferimento | Type Ref.*	*Dati | Data*	*Norme | Standard (*)*	*Marchi | Marks*
Cavo / Cable	2	I-Sheng Electric Wire & Cable Co Ltd		H03VV-F, H05VV-F	-	IMQ
Cavo / Cable	2	I-Sheng Electric Wire & Cable Co Ltd		H05RR-F, H05RN-F, H07RN-F	-	IMQ
Cavo / Cable	2	I-Sheng Electric Wire & Cable Co Ltd		05VA5V-F	-	VDE
Cavo / Cable	2	I-Sheng Electric Wire & Cable Co Ltd		H05Z1Z1-F, H03Z1Z1-F	-	VDE

Emesso il | Issued on **1989-02-27** *Data di aggiornamento | Updated on* **2023-03-06** *Sostituisce | Replaces* **2022-11-07**

Ciascun componente è contraddistinto da un numero avente il seguente significato:
1 - Componente marchiato e sostituibile con altro pure marchiato con caratteristiche equivalenti
2 - Componente sostituibile solo previa autorizzazione dell'IMQ
3 - Componente (integrato nell'apparecchio utilizzatore) provato congiuntamente all'apparecchio utilizzatore
4 - Componente in alternativa
5 - Componente per uso opzionale
6 - Componente da abbinare

Each component is signed by a number having the following meaning:

1 - Approved component replaceable with another one also approved with equivalent characteristics
2 - Component replaceable with IMQ authorization only

3 - Integrated component tested together with appliances

4 - Alternative component
5 - Component for optional use
6 - Component to be matched

(*) Queste colonne sono compilate a cura di IMQ / These colomns are filled in by IMQ

Type ref. SP-022

Diritti di concessione | Annual Fees

DAT94004220	**BTX.021100.DA19**	*Importo modelli IMQ - 0211 - Prese, spine e connettori di uso domestico | IMQ models - 0211 - Plugs and appliance couplers for domestic purposes*	4

LICENCE

APPAREILLAGE ELECTRIQUE DOMESTIQUE

LCIE N° : NF012_3095

Titulaire : *License Holder:*	**I-SHENG ELECTRIC WIRE & CABLE Co., Ltd** 52, Tin Hwu Road, Ta Gann village, Gwai San Hsian 33334 TAO YUANG HSIEN - Taïwan
Site de fabrication : *Factory:*	Voir Annexe / *See Annex*
Produit : *Product:*	**Fiche de prise de courant** *Plug*
Marque commerciale (s'il y a lieu) : *Trade mark (if any):*	I-SHENG
Modèle, type, référence : *Model, type, reference:*	SP-022, SP-023
Caractéristiques principales : *Main characteristics*:	Voir Annexe / *See Annex*
Informations complémentaires : *Additional information*:	/
Le produit est conforme à : *The product is in conformity with*:	NF C 61-314:2017
Documents pris en compte : *Relevant documents*:	CBTC FI-42163/M1, FI-39295/M1 / TR 296390-1,299265-1, 293014-1, 299265-2 et/*and* ISG-ESH-P21101320
Annule et remplace (s'il y a lieu) : *Cancels and replaces (if necessary)*:	La licence / *License* 608922 du/*of* 09/03/2011. Mise à jour suite à évolution de(s) norme(s)/update further to the evolution of the standard(s)

En vertu de la présente décision notifiée par le LCIE organisme mandaté, AFNOR Certification accorde le droit d'usage de la Marque NF à la société qui en est titulaire pour les produits visés ci-dessus, dans les conditions définies par les règles générales de la Marque NF et par les règles de certification NF, pour autant que les contrôles réguliers de la fabrication et les vérifications par tierce partie soient satisfaisants.

On the strength of the present decision notified by LCIE mandated certification body, AFNOR Certification grants the right to use the NF Mark to the licence holder for the above mentioned products, within the frame of the general rules of the NF Mark and of the NF certification rules, as far as the regular checking and third party verifications of the production are satisfactory.

Fontenay-aux-Roses, 17/12/2021

Date de fin de validité / *Expiry date* :
La validité de la présente licence cesse dès l'annulation de l'une des normes sur lesquelles elle est fondée.
The present license is valid until the cancellation of one of the standards on which it is based.

LABORATOIRE CENTRAL DES INDUSTRIES ELECTRIQUES
S.A.S au capital de 15.745.984 €
RCS Nanterre B 408 363 174
33 avenue du Général Leclerc
F - 92266 FONTENAY AUX ROSES

Julien Gauthier
Responsable Certification/Certification Officer

Accréditation N° 5-0014 Portée disponible sur www.cofrac.fr
CERTIFICATION DE PRODUITS ET SERVICES

LCIE
Laboratoire Central des Industries Electriques
Une société de Bureau Veritas
33 Avenue du Général Leclerc
92260 Fontenay-aux-Roses
FRANCE
WWW.LCIE.FR

Site(s) de fabrication / *Factory(ies)* :

I-SHENG ELECTRIC WIRE & CABLE COMPANY (Vietnam) (1786AP)
Lot D4-2 Que Vo Road, Que Vo Industrial Park, BAC NINH PROVINCE - Vietnam

I-SHENG ELECTRONICS (KUNSHAN) Co. Ltd (1458AP)
888, Tai Shan Road, Kunshan Development Zone
KUN SHAN CITY, JIANG SU PROVINCE - Chine

I-SHENG MANUFACTURING (Song Gang) Factory (1376AP)
Tang Xia Young road, Songgang Town, Bao'An Area, 518105 Shenzhen, Guangdong - Chine

LCIE
Laboratoire Central des Industries Electriques
Une société de Bureau Veritas
33 Avenue du Général Leclerc
92260 Fontenay-aux-Roses
FRANCE
WWW.LCIE.FR

RÉFÉRENCES - CARACTÉRISTIQUES PRINCIPALES/*REFERENCES - MAIN CHARACTERISTICS*

Feuille de norme / *Standard Sheet*	V
Courant nominal / *Rated current* (A) Tension nominale / *Rated voltage* (V)	16A 250 V~
Degré de protection *Degree of protection*	IP20
Présence de contact de terre *Provision for earthing*	avec contact de terre – *with earthing contact*
Procédé de raccordement du câble *Method of connecting the cable*	non démontable - *non-rewirable*
Type de connexion *Type of connections*	sertie – *crimped*
Couleur *Colour*	Noir, gris Black, Grey
Broches *Pins*	massives - *solid*
fiches / *plugs*	
Classe du matériel *Class of equipment*	I
Entrée de câble *Entry of cable*	longitudinale (SP-022) / *longitudinal* (SP-022) latérale (SP-023) / *lateral* (SP-023)

Composants ***Components***	**Modèle** ***Model***	**Fabricant** ***Manufacturer***	**Conformité** ***Conformity***	**Validité** ***Validity***
Câbles / *Cable*	H03VV-F 3X0,75 mm^2	I-Sheng Electric Wire & Cable Co., Ltd.	VDE	-
	H05VV-F 3G0,75 / 1 / 1,5mm^2			
	H05VA5V-F 3G0,75 /1mm^2			
	H03V2V2-F 3X0,75 mm^2			
	H05V2V2-F 3G0,75 /1mm^2			
	H05RR-F 3G0,75 /1 / 1,5mm^2			
	H05RN-F 3X0,75 /1mm^2	I-Sheng Electric Wire & Cable Co., Ltd.		
	H07RN-F 3X1 / 1,5 mm^2			
	H03Z1Z1-F 3X0,75 mm^2	I-Sheng Electric Wire & Cable Co., Ltd.		

LCIE
Laboratoire Central des Industries Electriques
Une société de Bureau Veritas
33 Avenue du Général Leclerc
92260 Fontenay-aux-Roses
FRANCE
WWW.LCIE.FR

CERTIFICATE ENEC16/FI/22/01023

Our Ref. HEL-CERT220500794-01

Certificate holder	I-Sheng Electric Wire & Cable Co., Ltd. 52, Tin Hwu Rd. Ta Gann Village Gwai San Hsian TAO YUAN HSIEN Taoyuan City, 33334, Taiwan
Product	Connector, non-rewirable
Trademark (if any)	I-SHENG
Type	IS-14N, with cord H05VV-F 3G0,75-1-1,5
Rating and principal characteristics	10 A, 250 V~, IP20
Is complying with the following European Standards	EN 60320-1:2015

It is authorized to use the ENEC Mark in conjunction with the suffix 16, as shown above.

Validity	This certificate is valid until 2027-06-08 provided that the Conditions for ENEC certification are met. This certificate includes the right to use the ENEC 16 mark under the condition that changes (if any) will be checked at SGS Fimko before the product is brought onto market and that the conditions for ENEC certification are met.

This certificate has been issued under the presumption and conditional on the fact that the licensee holds all necessary legal rights with regard to the product presented for testing and certification.

Date of issue 2022-06-09

SGS Fimko Ltd

Signature

Sixten Iökfors

Project Manager

This document is issued by the Company under its General Conditions of Service accessible at http://www.sgs.com/terms_and_conditions.htm. Attention is drawn to the limitation of liability, indemnification and jurisdiction issues defined therein.

Any holder of this document is advised that information contained hereon reflects the Company's findings at the time of its intervention only and within the limits of Client's instructions, if any. The Company's sole responsibility is to its Client and this document does not exonerate parties to a transaction from exercising all their rights and obligations under the transaction documents. Any unauthorized alteration, forgery or falsification of the content or appearance of this document is unlawful and offenders may be prosecuted to the fullest extent of the law.

SGS Fimko Ltd

Takomotie 8, FI-00380 Helsinki, Finland
t. +358 9 696 361 www.sgs.fi

Business ID 0978538-5 Member of the SGS Group (SGS SA)

Manufacturer	I-Sheng Manufacturing (Song Gang) Factory Tang Xia Yong Road, Songgang Town Baoan, Shenzhen, Guangdong, China
Manufacturing sites	1. I-Sheng Manufacturing (Song Gang) Factory Tang Xia Yong Road, Songgang Town Baoan, Shenzhen, Guangdong, China 2. I-Sheng Electronics (Kunshan) Co., Ltd. No. 888, Tai Shan Road Kunshan Development Zone Kunshan, 215300, Jiangsu, China 3. I-Sheng Electric Wire & Cable Company (Vietnam) Lot D4-2 Que Vo Road Que Vo Industrial Park, Que Vo BAC NINH PROVINCE, Vietnam
Directive information	The certified product(s) fulfils requirements of mentioned standard(s) which are harmonised under the Low Voltage Directive (2014/35/EU) at the date of issue of the certificate.
Additional information	Standard sheet IEC/EN 60320-3 C13 The product has CB Certificate FI-52984 in accordance with the CB system. This Certificate replaces Certificate ENEC/FI 2017045 dated 13 June 2017, due to new testing.
Following limitations apply	-
As shown in the Test Report(s) No(s):	HELES2112001452-1

FINAS
Finnish Accreditation Service
S003 (EN ISO/IEC 17065)

This document is issued by the Company under its General Conditions of Service accessible at http://www.sgs.com/terms_and_conditions.htm. Attention is drawn to the limitation of liability, indemnification and jurisdiction issues defined therein.

Any holder of this document is advised that information contained hereon reflects the Company's findings at the time of its intervention only and within the limits of Client's instructions, if any. The Company's sole responsibility is to its Client and this document does not exonerate parties to a transaction from exercising all their rights and obligations under the transaction documents. Any unauthorized alteration, forgery or falsification of the content or appearance of this document is unlawful and offenders may be prosecuted to the fullest extent of the law.

SGS Fimko Ltd
Takomotie 8, FI-00380 Helsinki, Finland
t. +358 9 696 361 www.sgs.fi
Business ID 0978538-5 Member of the SGS Group (SGS SA)