REV.	DATE	DESCRIPTION	BY	APVD
1	20220209	Modify YYYY-MM to YYYY-MM-DD	ALICIA	
A	20250502	因應部分item EC，Philips 12 NC要改為300007674762	Killy	

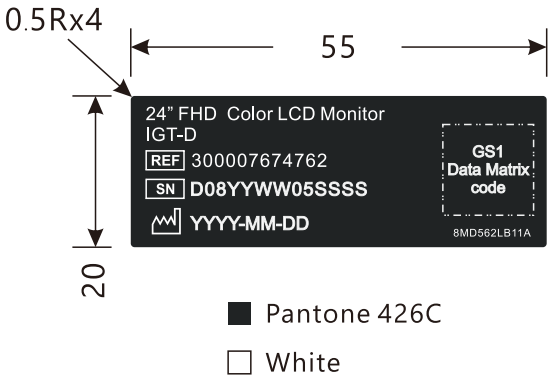

Note:

1.Use 3MDL4XLB850 Blank label.
2.Meet UL second printing standard.
Only use PGJI2 printed label: MING MEI, type: MM-001
Ricoh #B110CR ribbon.
3.GS1 Data Matrix code include:
REF {FNC1}90300007674761
SN {GS}21D08YYWW05SSSS
MFG {GS}11YYMMDD

3-1.
REF {FNC1}90300007674761
↓
固定

3-2.
SN {GS}21D08YYWW05SSSS
↓ ↓
固定 DIVA序號

3-3.
MFG {GS}11YYMMDD
↓ ↓ ↓
固定 年月 日期

PM / SALES	THIRD ANGLE PROJECTION	UNITS: mm	SCALE: 1/1	SHEET: 1/1	MODEL NO.: RUP2433AMI_D
		MATERIAL: SEE NOTES		TREATMENT: SEE NOTES	
PE / PCD	DSGD by killy	2025/05/02	PART NAME: SERIAL LABEL		
	APVD by		PART NO.: 8MD562LB11A		VER.A
	APVD NO.:	FILE NAME: RUP2433AMI_D.cdr	DIVA Laboratories, Ltd.		