KARA
KARA COMPONENT TECHNOLOGY CO.,LTD

承　認　書

SPECIFICATION FOR APPROVAL

客戶名稱(CUSTOMER): 鈺緯科技開發股份有限公司

品名(DESCRIPTION): SFP, Connector, .8mm [.031in] Centerline, Signal, Operating Temperature Range -55 - 85 °C [-67 - 185 °F], Data Rate (Max) 4 Gb/s, 20 Position

客戶料號(PART NO): 3FF02010330 (F0324)

料　　號(PART NO): 1367073-1 (TE)

送樣日期(DATE):

承認號碼(APPROVED NO):

Kara Component Technology co., Ltd.		Customer Approval	
Prepare	Approval	Check	Approval
Joseph			設計驗證 工程課 2025 -06- 24 發行 鈺緯科技開發股份有限公司

鉅廣科技有限公司
Kara Component Technology co., Ltd.
23511新北市中和區建八路2號8F-3
8F.-3, No.2, Jian 8th Rd., Zhonghe Dist., New Taipei City 23511
TEL:886-2-8226-9596

THIS DRAWING IS UNPUBLISHED. RELEASED FOR PUBLICATION 20
© COPYRIGHT 20 - ALL RIGHTS RESERVED.

LOC	DIST
ES	00

REVISIONS

P	LTR	DESCRIPTION	DATE	DWN	APVD
	K	REVISED PER ECO-12-014566	18DEC2012	JY	AC
	L	UPDATE NICKEL PLATING THICKNESS	20JUN2017	JW	SH
	M	REVISED PER ECR-19-009785	24JUN2019	IT	SH
	M1	CHANGE SLOT TO 1.3 MAX	27AUG2019	IT	SH

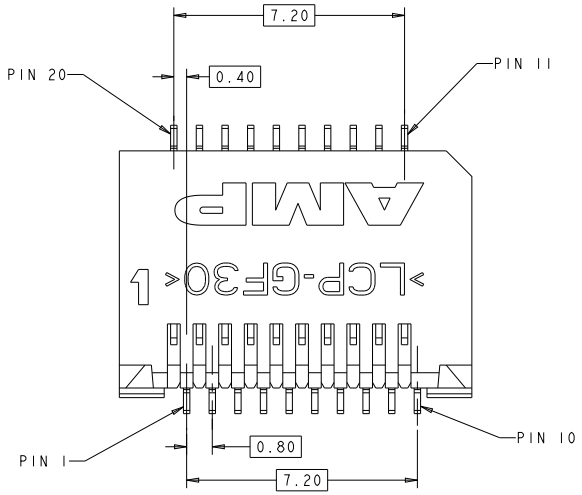

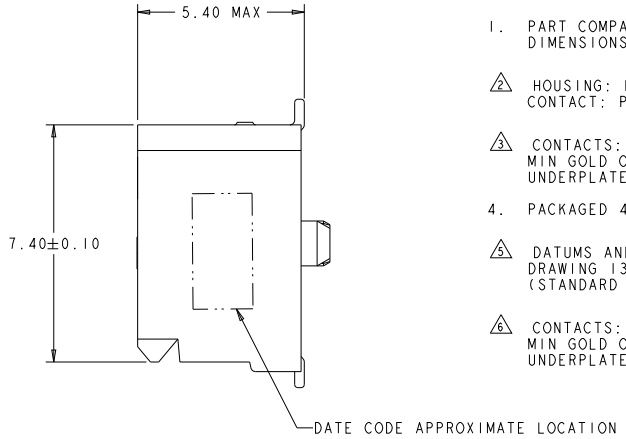

1. PART COMPATABLE WITH SFP MSA. REFER TO THE SFP MSA FOR DIMENSIONS NOT SHOWN ON THIS PRINT.

2. HOUSING: HIGH TEMPERATURE LCP, UL 94V-0 RATED, BLACK. CONTACT: PHOSPHOR BRONZE.

3. CONTACTS: 0.00038 MIN GOLD IN CONTACT AREA, 0.00013 MIN GOLD ON SOLDER AREA, OVER 0.00127 MIN NICKEL UNDERPLATE ON ENTIRE CONTACT.

4. PACKAGED 480 PIECES PER REEL.

5. DATUMS AND BASIC DIMENSIONS TO BE ESTABLISHED BY CUSTOMER, SEE DRAWING 1367034 FOR LAYOUT WHEN USED WITH 1367034-1 BOTTOM CAGE (STANDARD SFP APPLICATION).

6. CONTACTS: 0.00076 MIN GOLD IN CONTACT AREA, 0.00013 MIN GOLD ON SOLDER AREA, OVER 0.00127 MIN NICKEL UNDERPLATE ON ENTIRE CONTACT.

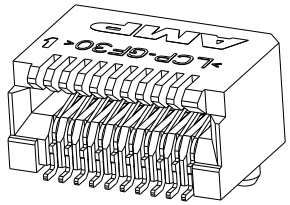

SCALE 8:1

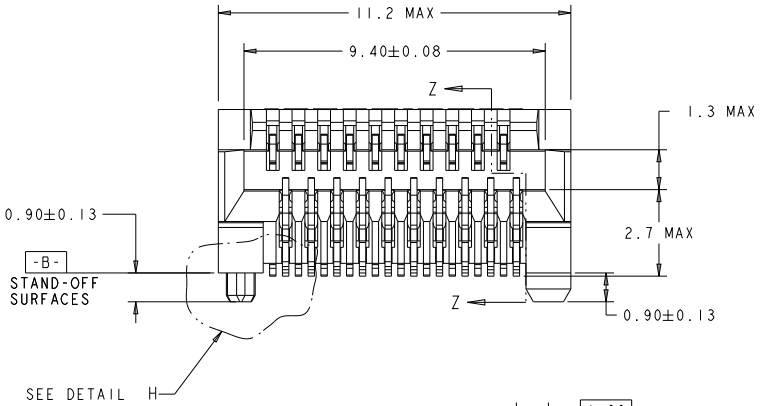

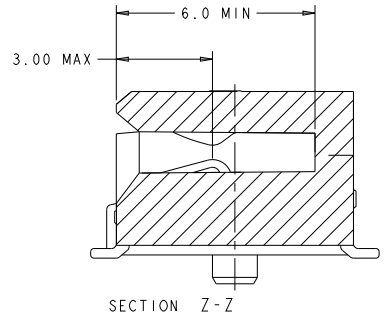

SECTION Z-Z

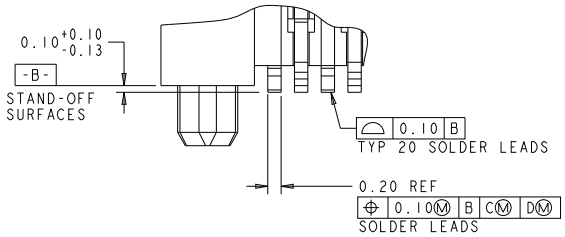

DETAIL H
SCALE 25:1

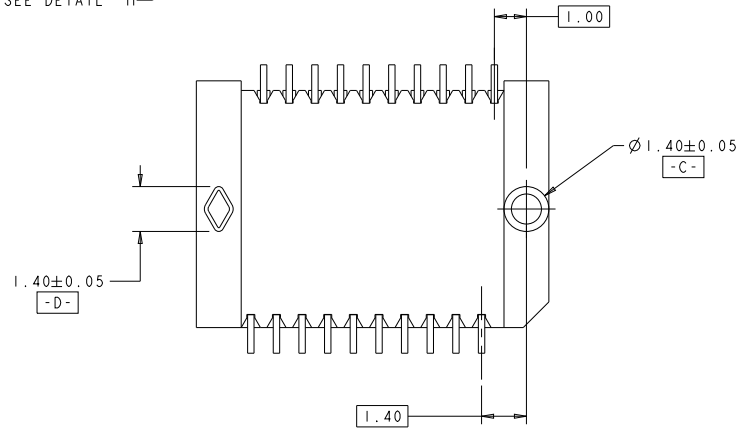

DATE CODE	FINISH	PART NUMBER
SEE PAGE 2	3	1367073-6
YES	6	1367073-4
YES	3	1367073-3
NO	6	1367073-2
NO	3	1367073-1

設計驗證
工程課
2025 -06- 24
發行
鈺緯科技開發股份有限公司

3FF02010330(F0324)

THIS DRAWING IS A CONTROLLED DOCUMENT.

DIMENSIONS: mm

TOLERANCES UNLESS OTHERWISE SPECIFIED:
0 PLC ±-
1 PLC ±-
2 PLC ±0.10
3 PLC ±-
4 PLC ±-
ANGLES ±-

MATERIAL 2

FINISH SEE TABLE

DWN P. KERLIN 01MAR2000
CHK E. BRIGHT 01MAR2000
APVD E. BRIGHT 01MAR2000
PRODUCT SPEC 108-1949
APPLICATION SPEC 114-13017
WEIGHT -

TE Connectivity

NAME PT CONNECTOR ASSEMBLY, 20 POSITION, SFP, RTANG, 0.8MM
-

SIZE A1 | CAGE CODE 00779 | DRAWING NO C-1367073 | RESTRICTED TO -

Customer Drawing | SCALE 12:1 | SHEET 1 OF 3 | REV M1

THIS DRAWING IS UNPUBLISHED. RELEASED FOR PUBLICATION 20
© COPYRIGHT 20 - ALL RIGHTS RESERVED.

LOC	DIST
ES	00

REVISIONS

P	LTR	DESCRIPTION	DATE	DWN	APVD
	-	SEE SHEET 1	-	-	-

1367073-6 AS SHOWN
PRINT PART NUMBER AND DATE CODE ON TOP
ALL OTHERS SAME AS 1367073-1

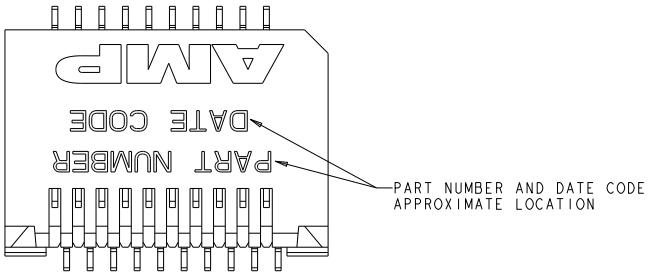

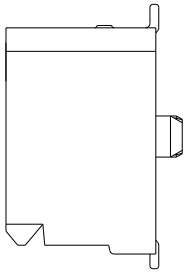

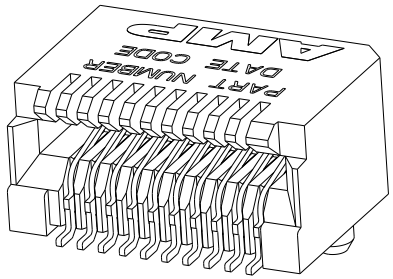

1367073-1 AS SHOWN
SCALE 11:1

設計驗證
工程課
2025 -06- 24
發行
泰連科技開發股份有限公司

THIS DRAWING IS A CONTROLLED DOCUMENT.

DIMENSIONS: mm

TOLERANCES UNLESS OTHERWISE SPECIFIED:
0 PLC ±·
1 PLC ±·
2 PLC ±0.10
3 PLC ±·
4 PLC ±·
ANGLES ±·

MATERIAL
FINISH

DWN P. KERLIN	01MAR2000
CHK E. BRIGHT	01MAR2000
APVD E. BRIGHT	01MAR2000
PRODUCT SPEC	108-1949
APPLICATION SPEC	114-13017
WEIGHT	-

TE Connectivity

NAME
PT CONNECTOR ASSEMBLY, 20 POSITION, SFP, RTANG, 0.8MM
-

SIZE	CAGE CODE	DRAWING NO	RESTRICTED TO
A1	00779	C-1367073	-

Customer Drawing | SCALE 12:1 | SHEET 2 OF 3 | REV M1

THIS DRAWING IS UNPUBLISHED. RELEASED FOR PUBLICATION 20
© COPYRIGHT 20 - ALL RIGHTS RESERVED.

LOC	DIST
ES	00

REVISIONS

P	LTR	DESCRIPTION	DATE	DWN	APVD
	-	SEE SHEET 1	-	-	-

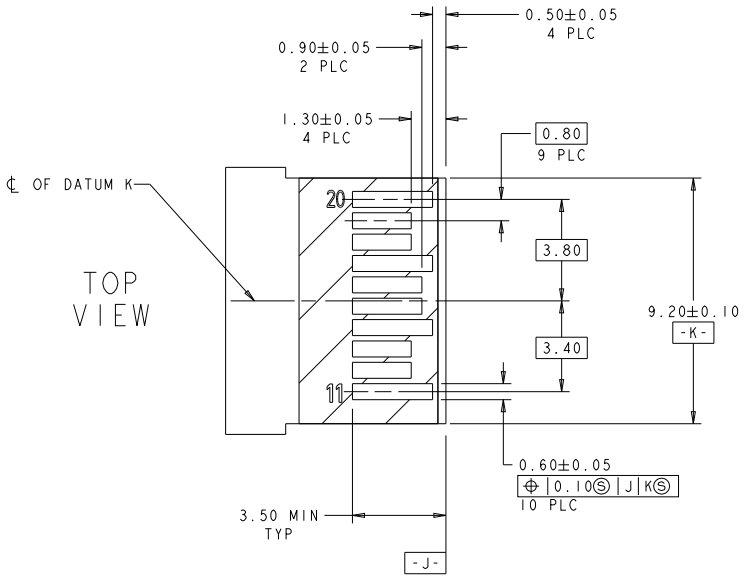

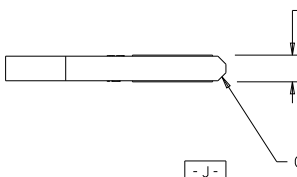

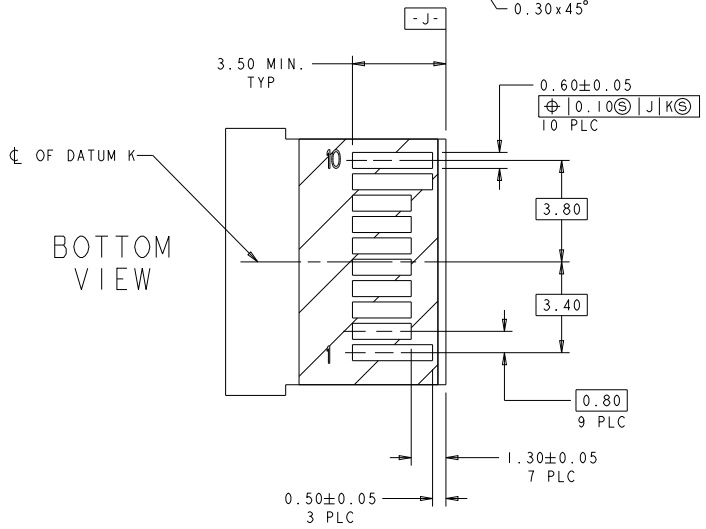

RECOMMENDED LAYOUT DETAIL
MATING TRANSCEIVER PCB
SCALE 10:1

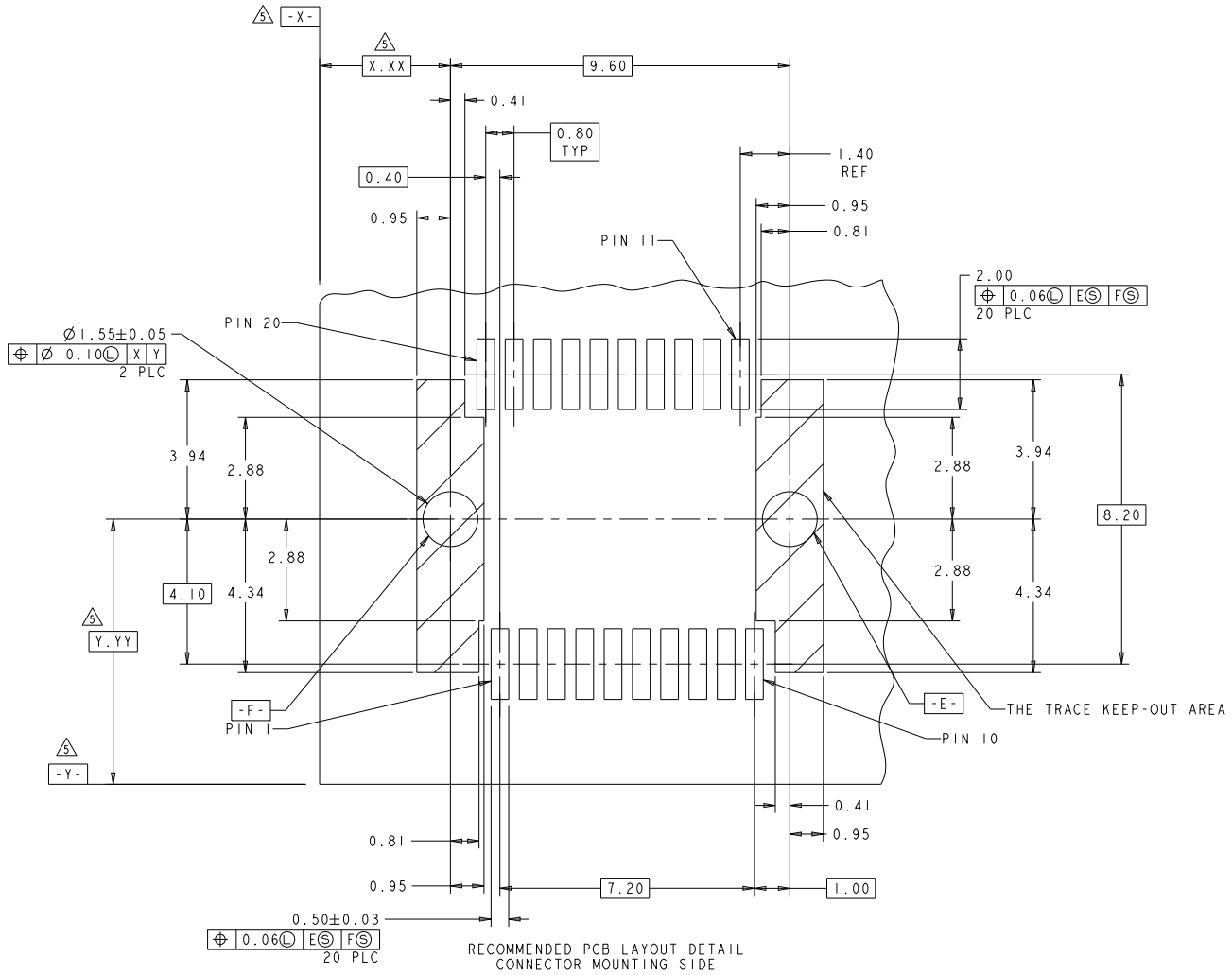

RECOMMENDED PCB LAYOUT DETAIL
CONNECTOR MOUNTING SIDE
SCALE 14:1

設計驗證
工程課
2025 -06- 24
發行
泰連科技開發股份有限公司

THIS DRAWING IS A CONTROLLED DOCUMENT.

DIMENSIONS: mm

TOLERANCES UNLESS OTHERWISE SPECIFIED:
0 PLC ±·
1 PLC ±·
2 PLC ±0.10
3 PLC ±·
4 PLC ±·
ANGLES ±·

MATERIAL
FINISH

DWN	P. KERLIN	01MAR2000
CHK	E. BRIGHT	01MAR2000
APVD	E. BRIGHT	01MAR2000
PRODUCT SPEC	108-1949	
APPLICATION SPEC	114-13017	
WEIGHT	-	

TE Connectivity

NAME: PT CONNECTOR ASSEMBLY, 20 POSITION, SFP, RTANG, 0.8MM
-

SIZE	CAGE CODE	DRAWING NO	RESTRICTED TO
A1	00779	C-1367073	-

Customer Drawing | SCALE 12:1 | SHEET 3 OF 2 | REV M1

Statement of Compliance

Requested Part

05 September 2024 **1367073-1** (Part 1 of 1)

TE Internal Number:	1367073-1
Product Description:	20 POS SMT CONN, SFP, 15AU
Part Status:	Active
Mil-Spec Certified:	No
EU RoHS Directive 2011/65/EU:	Compliant

This declaration covers EU Directive 2011/65/EU incl. Delegated Directive 2015/863/EU.

EU ELV Directive: 2000/53/EC	Compliant
China RoHS 2 Directive: MIIT Order No 32, 2016	No Restricted Materials Above Threshold
EU REACH Regulation: (EC) No. 1907/2006	Current ECHA Candidate List: **JUNE 2024 (241)** Candidate List Declared Against: **JUNE 2024 (241)** Does not contain REACH SVHC
Halogen Content:	Low Halogen - Br, Cl, F, I < 900 ppm per homogenous material. Also BFR/CFR/PVC Free
Solder Process Capability Code:	Reflow solder capable to 260°C
Material Declarations:	See all product compliance on the Product Detail Page

TE Connectivity Corporation

1050 Westlakes Drive

Berwyn, PA 19312

This information is provided based on reasonable inquiry of our suppliers and represents our current actual knowledge based on the information they provided. This information is subject to change.

The part numbers that TE has identified as EU RoHS compliant have a maximum concentration of 0.1% by weight in homogenous materials for lead, hexavalent chromium, mercury, PBB, PBDE, DBP, BBP, DEHP, DIBP, and 0.01% for cadmium, or qualify for an exemption to these limits as defined in the Annexes of Directive 2011/65/EU (RoHS2). Finished electrical and electronic equipment products will be CE marked as required by Directive 2011/65/EU. Components may not be CE marked.

Additionally, the part numbers that TE has identified as EU ELV compliant have a maximum concentration of 0.1% by weight in homogenous materials for lead, hexavalent chromium, and mercury, and 0.01% for cadmium, or qualify for an exemption to these limits as defined in the Annexes of Directive 2000/53/EC (ELV).

Regarding the REACH Regulation, the information TE provides on SVHC in articles for this part number is based on the latest European Chemicals Agency (ECHA) 'Guidance on requirements for substances in articles' posted at this URL: https://echa.europa.eu/guidance-documents/guidance-on-reach