

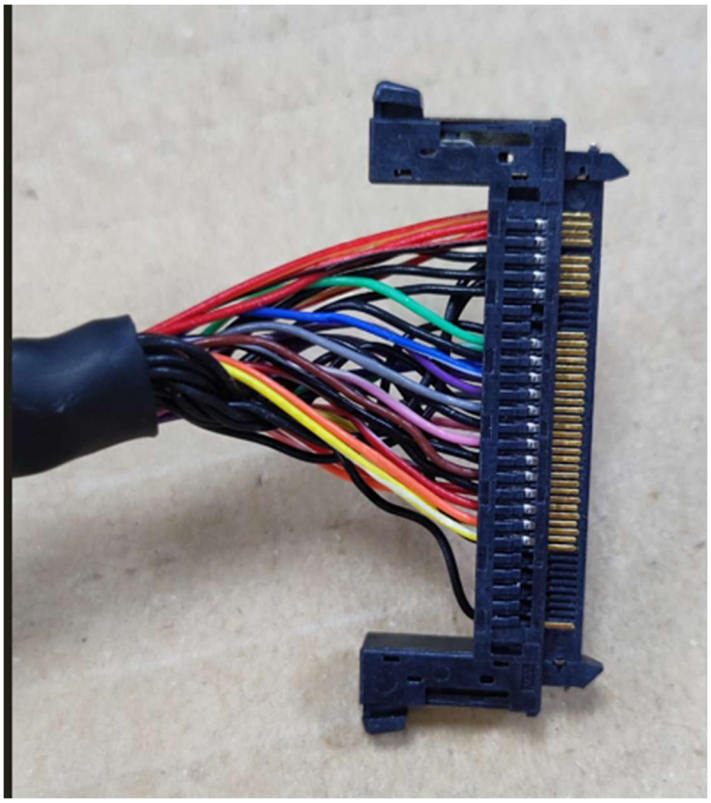

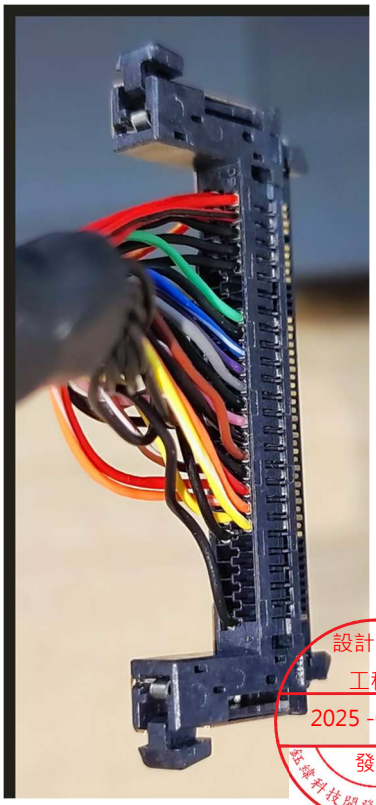

設計驗證
工程課
2025 -06- 03
發行
[illegible]科技開發股份有限公司

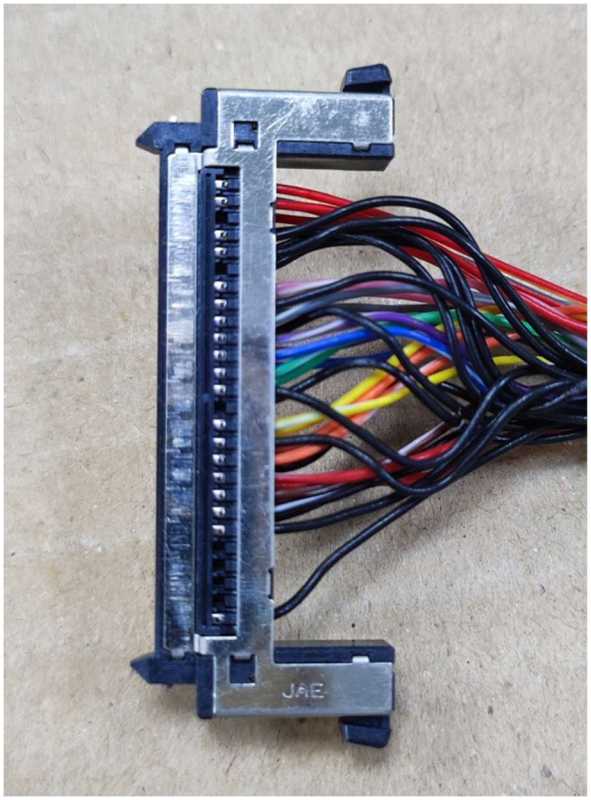

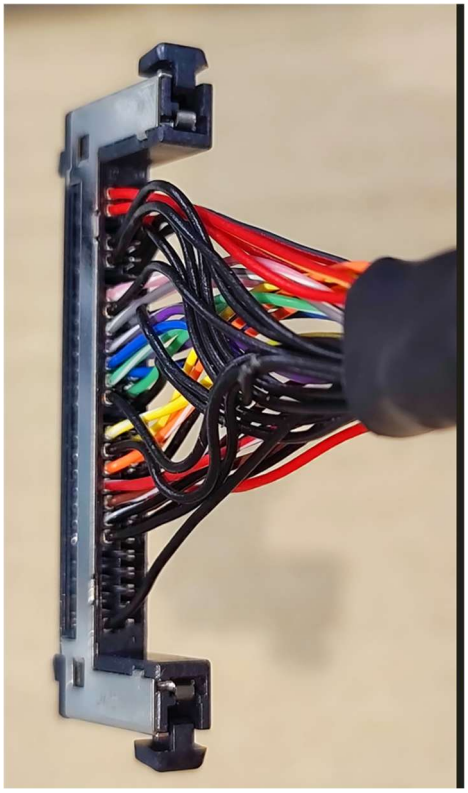

Xinya

SPECIFICATION FOR APPROVAL

承認書

客户名称 Customer Name	鈺緯科技
产品描述 Description	LVDS (FI-RE51HL*2, 180mm)
客户料号 Customer P/N	3KH00307000(K1195)
机种 Model	
新亚料号 Xinya P/N	X25LGW-4045-P
制作 Designed by	张拙
审核 Checked by	汪小龙
核准 Approved by	孙玉宝

設計驗證
工程課
2025-06-03
發行
鈺緯科技開發股份有限公司

客户确认 CUSTOMER SIGNATURE		
制作 Prepared By	审核 Checked By	核准 Approved By
请签字确认回签。 PLEASE RETURN TO US ONE COPY OF SPECIFICATION FOR APPROVAL WITH YOUR APPROVED SIGNATURES.		

苏州新亚电通有限公司
SUZHOU XINYA ELECTRIC COMMUNICATION CO., LTD.

HARNESS图号 DRAWING NO.	单重:	LVDS CABLE
H4045F	克	TDR: 100±10Ω Rise Time:200ps(20%~80%)

版本 REV.	日期 DATE	DCN NO.	变更内容 DESCRIPTION	制图 DRAWN

套管

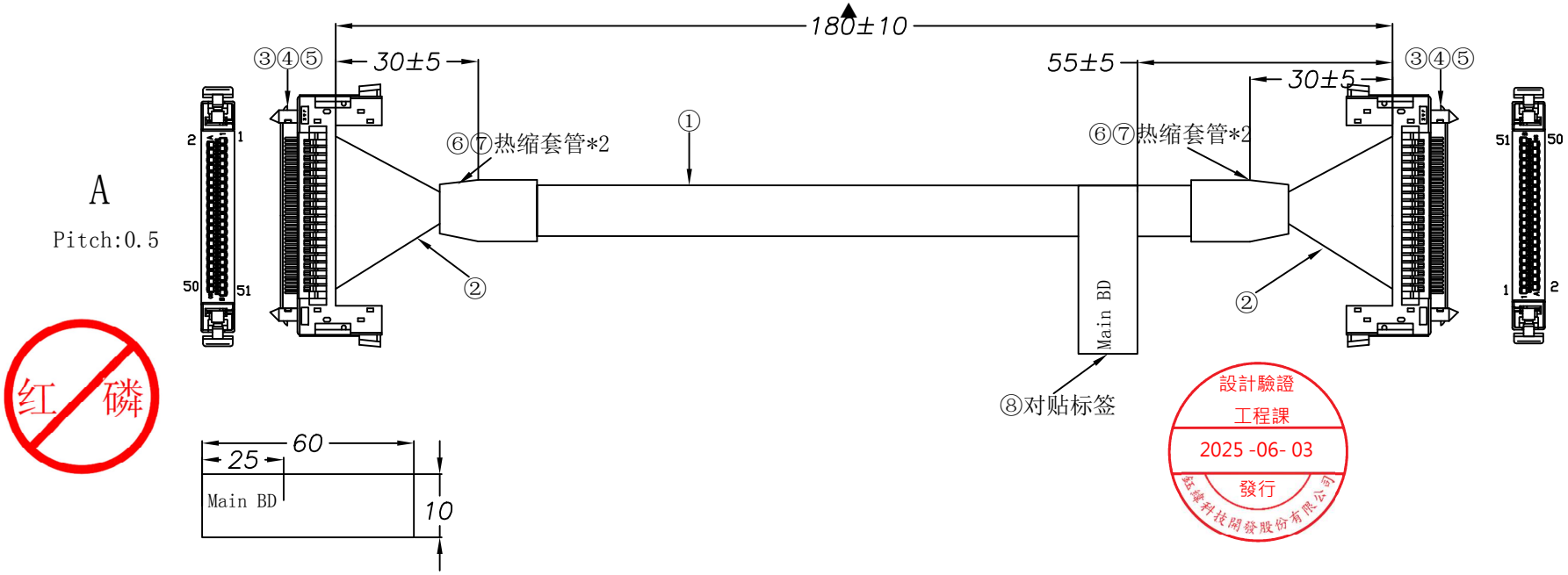

序号 NO.	料号 PART NO.	数量 Q'TY	材料 MATERIAL	厂商 VENDOR
⑧	-	1	LABEL:无卤白底空白标签 60*10mm	MINGBAO/EQUIV
⑦	TBUHBI080C-*-HP	2	无卤无红磷黑色普通热缩套管 Φ8.0mm VW-1,L=25mm	CYG/WOER
⑥	TBUHBI040C-*-HP	2	无卤无红磷黑色普通热缩套管 Φ4.0mm VW-1,L=10mm	CYG/WOER
⑤	D0501-51HL-N	2	HOUSING:FI-RE51HL	JAE
④	D0501-TOP.VB-N	38	TERMINAL:FI-RNC3-1B-1E-15000(单数)	JAE
③	D0501-T1P.VB-N	36	TERMINAL:FI-RNC3-1A-1E-15000(双数)	JAE
②	00S1571-28*0Z-*	26	无DOP无红磷 UL1571 #28 OD=0.6(7/0.127) VW-1	HM/XINYA
①	-	1	无红磷UL20276 30#/10P+30#/4C+A+B 外黑	HM/FUERTAI

注：1、A/B端PIN1;11;18;21;26;27;34;37;42;43;44;45;46
穿1571 28#电线与编织焊接在一起后热缩小套管，
再热缩大套管包裹小套管与护套线
打▲的为重点检测尺寸

苏州新亚电通股份有限公司 SUZHOU XINYA ELECTRIC COMMUNICATION Co.,LTD.	制表 (DR.)	校对 (COL.)	审核 (CHK.)	核准 (APPD.)	通用公差 GENERL TOLERANCE		料号 PART NO.	X25LGW-4045-P	客户 CUSTOMER	钰纬科技	版本 REV.	1
	张 2025-02-07 拙				X.±0.50	X.°±3°	佳世达料号	TY.5KD10.00J	第1版 (OR.D.)	2025.02.07	页次 SHEET	1/2
					.X±0.30	.X°±1°	钰纬料号	3KH00307000(K1195)				
							机种号 MODEL.NO.	-	比例：无 SCALE: FREE		单位 UNITS	MM

HARNESS图号 DRAWING NO. H4235F

設計驗證
工程課
2025 -06- 03
發行
钰纬科技開發股份有限公司

12	UL20276 30#/10P+30#/4C +A+B	黑	188±1	对 绞	1.5	1.5	23
13		黑/白			1.5	1.5	22
14		棕		对 绞	1.5	1.5	20
15		棕/白			1.5	1.5	19
16		红		对 绞	1.5	1.5	17
17		红/白			1.5	1.5	16
19		橙/白		对 绞	1.5	1.5	15
20		橙			1.5	1.5	14
22		黄		对 绞	1.5	1.5	13
23		黄/白			1.5	1.5	12
28		绿		对 绞	1.5	1.5	36
29		绿/白			1.5	1.5	35
30		蓝		对 绞	1.5	1.5	33
31		蓝/白			1.5	1.5	32
32		紫		对 绞	1.5	1.5	31
33		紫/白			1.5	1.5	30
35		灰/白		对 绞	1.5	1.5	29
36		灰			1.5	1.5	28
38		粉		对 绞	1.5	1.5	25
39		粉/白			1.5	1.5	24
A	线 规 SPEC.	颜色 COLOR	开线 CUT	绞 线 TWISTED PAIR	A	B	B
					剥 头		

两端分别与编织网焊接

48	UL20276 30#/10P+30#/4C +A+B				红/黑		188±1					1.5			1.5	48
49					红/黄							1.5			1.5	49
50					红/蓝							1.5			1.5	50
51					红/绿							1.5			1.5	51
1	1571 28#TS	1571 28#TS			黑	黑	35±1	35±1				1.5	8.0	8.0	1.5	1
11	1571 28#TS	1571 28#TS			黑	黑	35±1	35±1				1.5	8.0	8.0	1.5	11
18	1571 28#TS	1571 28#TS			黑	黑	35±1	35±1				1.5	8.0	8.0	1.5	18
21	1571 28#TS	1571 28#TS			黑	黑	35±1	35±1				1.5	8.0	8.0	1.5	21
26	1571 28#TS	1571 28#TS			黑	黑	35±1	35±1				1.5	8.0	8.0	1.5	26
27	1571 28#TS	1571 28#TS			黑	黑	35±1	35±1				1.5	8.0	8.0	1.5	27
34	1571 28#TS	1571 28#TS			黑	黑	35±1	35±1				1.5	8.0	8.0	1.5	34
37	1571 28#TS	1571 28#TS			黑	黑	35±1	35±1				1.5	8.0	8.0	1.5	37
42	1571 28#TS	1571 28#TS			黑	黑	35±1	35±1				1.5	8.0	8.0	1.5	42
43	1571 28#TS	1571 28#TS			黑	黑	35±1	35±1				1.5	8.0	8.0	1.5	43
44	1571 28#TS	1571 28#TS			黑	黑	35±1	35±1				1.5	8.0	8.0	1.5	44
45	1571 28#TS	1571 28#TS			黑	黑	35±1	35±1				1.5	8.0	8.0	1.5	45
46	1571 28#TS	1571 28#TS			黑	黑	35±1	35±1				1.5	8.0	8.0	1.5	46
编织网																编织网
A	线 规 SPEC				颜色 COLOR		开线 CUT		绞 线 TWISTED PAIR			A			B	B
												剥头 PEEL				

苏州新亚电通股份有限公司 SUZHOU XINYA ELECTRIC COMMUNICATION Co.,LTD.	制 表 (DR.)	校 对 (COL.)	审 核 (CHK.)	核 准 (APPD.)	通用公差 GENERL TOLERANCE		料 号 PART NO.	X25LGW-4045-P	客 户 CUSTOMER	钰纬科技	版 本 REV.	1
	张 2025-02-07 抽				X.±0.50	X.°±3°	佳世达料号	TY.5KD10.00J	第1版 (OR.D.)	2025.02.07	页 次 SHEET	2/2
					.X±0.30	.X°±1°	钰纬料号 机种号 MODEL.NO.	3KH00307000(K1195) -	比例：无 SCALE: FREE		单 位 UNITS	MM

版本 REV.	日 期 DATE	变更单号 ECO NO.	变更内容 DESCRIPTION	制图 DRAWN

HARNESS图号DRAWING NO.

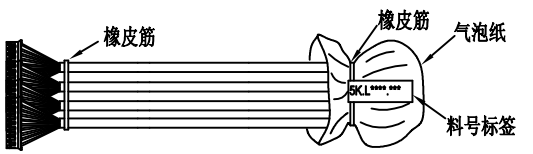

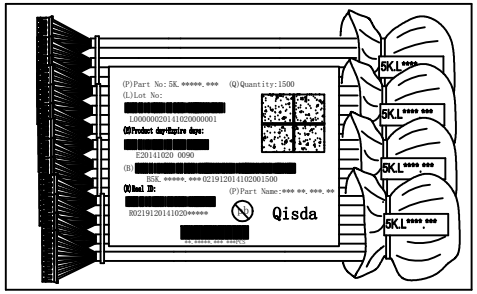

附图A：

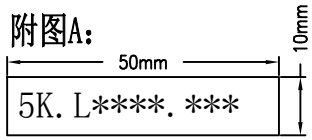

附图B：

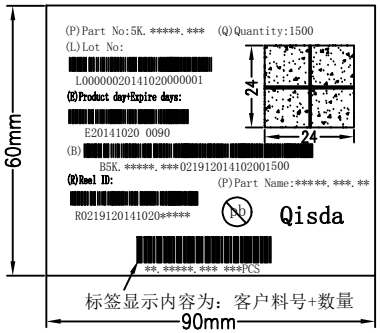

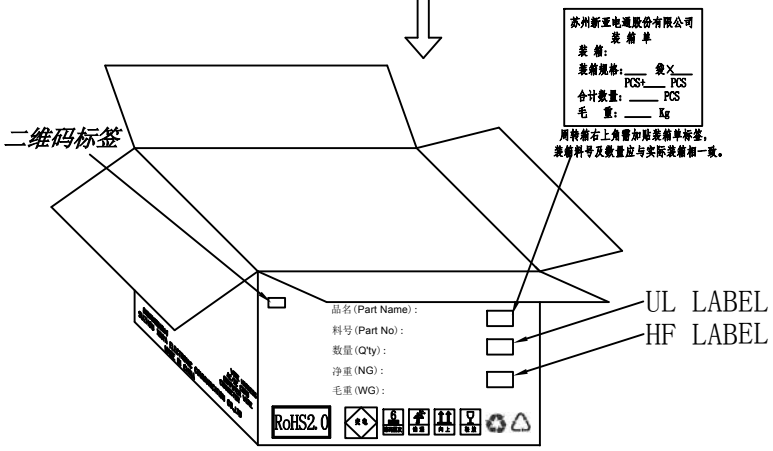

附图C：

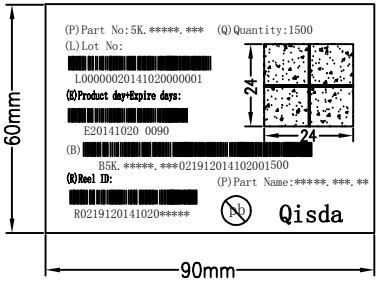

备注：

1 每***PCS用橡皮筋扎成一扎，加贴一料号标签(见附图A),有气泡袋包扎的料号标签贴在气泡袋上，无气泡袋包扎的料号标签贴在线体上。

2 如遇过板端子、磁环等易损构件，每扎包装时须加气泡纸。

3 将每扎产品依次装入一PE袋,PE袋上需加贴二维码标签(见附图B)。

4 箱体外必须贴上UL标签及二维码标签(见附图C)**(无卤料需加贴“HF”标签)**

5 外箱单重的信息，需要填写在对应位置上，书写工整，不可随意书写。

6 箱子不得有破损，用胶带密封好，且注意不可重压。。

	制 表 (DR.)	校 对 (COL.)	审 核 (CHK.)	核 准 (APPD.)	通用公差 GENERL TOLERANCE		料 号 PART NO.	LCD GP料包装图	客 户 CUSTOMER	佳世达	版 本 REV.	1
苏州新亚电通股份有限公司 SUZHOU XINYA ELECTRIC COMMUNICATION Co.,LTD.	范 2022-10-11 唯浩				X.±0.50	X.°±3°	客户料号 CUTM. NO.	–	第1版 (OR.D.)	2022.10.11	页 次 SHEET	1/1
					.X±0.30	.X°±1°	机种号 MODEL. NO.	–	比例：无 SCALE: FREE		单 位 UNITS	MM

苏州新亚电通股份有限公司

类　　别	料号编码原则 [线束成品料号编列]	文件编号	X001
工作指导书		机密等级	■ 机密 □ 一般
		版　　次	A
		页　　次	1 / 2

线束成品料号编列：

S □□ □ □□-□□□□-□□-□□-□□

1 2 3 4 5 6 7 8

1、销售模式码：S=外销(保税)　X=内销(非保税)

2、年度码：8 代表 2008 年开发的料件，16 代表 2016 年开发的料件

3、产品类别码：

A	镀锡FFC(扁铜线)		B	镀金FFC(扁铜线)
C	咪头		E	机外线(注塑成型类)
G	隔离线		H	一端HOUSING，一端沾锡
I	IDC类		J	两端HOUSING类单线
K	镀锡FFC(圆铜线)		L	Wire Harness LVDS
M	一端HOUSING，一端电源插头		N	NB CABLE
P	FPC		Q	原材料类
R	FFC G-TYPE		S	MINI SAS
T	外接端子类		V	Wire Harness排线类
W	Only Wire		Y	Wire Harness刺破式类

4、客户别码：详见客户识别码索引表

5、流水码：从 0001~9999，一个循环结束后，再从 0001~9999

6、特殊料件识别码：

无特殊要求时为空

产品类别码(Table 2)

C	FFC小线冲型类		CL	FFC LVDS冲型类
CV	FFC冲型+HOT-bar类		CF	FFC反折Pin冲型类
F	FFC反折Pin类		L	FFC LVDS类(无冲型、HOT-bar)
LF	FFC LVDS反折Pin类		VF	FFC HOT-bar反折Pin类
V	HOT-bar类		VL	FFC LVDS(HOT-bar类)
TSD	复杂的汽车线(2个以上组件)		TSE	简单的汽车线(2个组件)
ASD	复杂的组合线(2个以上组件，且非汽车线)		ASE	简单的组合线(2个组件，且非汽车线)
CD	低单价线束			

7、环保料件识别码：

HF	无卤类		Z	无DOP类
HZ	无卤、无DOP类		P	无红磷类
HP	无卤、无红磷类			

8、产品交货地点码：

正常此码省略

当同一个料号出不同产地时，增加产地后缀码，详细见客户识别码索引表

除先锋产品出海外，后缀增加“-E”以示区分

先锋产品出海外，后缀增加“-X”，切记，不是“-*”

若产品交往海外的不同地点国家，在”-E”和 ”-X”前增加 2 码地点码，

如” –HL-E”(出海外，交往荷兰)、” –BL-E”(出海外，交往波兰)

详见客户识别码索引表

苏州新亚电通股份有限公司

PRODUCTION NAME：WIRE HARNESS			
Designed：Jodie	APVD：Aviv	Edition：D	File Name：ML1001
		DATE：2019.07.01	Page：1/8

1. SCOPE 应用范围

This product specification contains the test method, the general performance and requirement for Flexible Flat Cable system.

2. REQUIREMENTS 必要条件

2.1. DESIGN AND CONSTRUCTION 设计规范

Product shall be of the design, construction and physical dimensions specified on the applicable product drawing

2.2. MATERIALS 材质

A、Housing：见零件规格书

B、Terminal：见零件规格书

C、Wire：见零件规格书

2.3. Wire RATINGS 线材规格

A、见零件规格书

3.Standard of Confidence Test 信赖性测试

3.1 TEST ENVIRONMENT 测试条件

A. Environment Temperature: 15~35℃

B. Humidity: 45~75%

3.2.TEST REQUIREMENTS AND PROCEDURES SUMMARY

PRODUCTION NAME：WIRE HARNESS			
Designed：Jodie	APVD：Aviv	Edition：D	File Name：ML1001
		DATE：2019.07.01	Page：2/8

Items 测试项目		Test conditions 测试条件	Criteria 判定标准
1	Appearance inspection 外观检查	1、without mechanical injure、deformation、denude 2、Connection terminal should be shining， no oxidization and scoring	PASS
ELECTRICAL 电气特性			
1	Contact Resistance 接触阻抗	20mV/10mA	Less than 20mΩ
2	Insulation Resistance 绝缘阻抗	DC500V /1min	More than 100MΩ
3	Dielectric Withstanding Voltage 耐电压	AC250V/0.5mA 1min	No breakdown
4	Continuity Test 导通测试	Continuity performance should be good， without short、wrong order	No Withoutshort wrong order
MECHANICAL 机械特性			
5	Terminal crimp tensile strength 抗张强度	Terminal crimp tensile strength (Excluding insulation of wire)：	Figure 1
6	Pull-out Test 插拔测试	With the corresponding conn is inserted in the 25± 3mm/min	Figure 2
7	Mechanical life 机械寿命	Insertion and withdrawal 50 times with speed of 100 times/ hour	More than 50 cycle
8	Plating Thickness Test 膜厚测试	Coating Thickness Tester	NA

ENVIRONMENTAL 环境特性			
9	Heat Resistance 耐高温	At the temperature of high temperature test box 85±2℃ is placed in a 96±1H，1H recovery room temperature after detection	PASS
10	Low temperature resistance 耐低温性	At the temperature of high temperature test box -25±2℃ is placed in a 96±1H，1H recovery room temperature after detection	PASS
11	Heat Cycle Test 冷热循环	The 1 cycles：-25℃~+25℃~+85℃~+25℃，5 consecutive cycles，1H recovery room temperature after detection	PASS
12	Humidity 恒温恒湿	Test temperature of 40 degrees, humidity 90～95%RH，the time of 96±1H，1H recovery room temperature after detection	PASS
13	Vibration Test 振动测试	Frequency：50HZ，Swing：1.52mm，each of X, Y, Z-axis directions for 12cycles，and every30 mins	The external appearance have no injury，onnection part has no loose or break
14	Salt Spray 盐雾试验	Temperature：35 ±2℃ Salt solution：5 ±1% Duration：16±1h (After the test，salt deposit shall be removed in running water) 符合国标 GB6461-2002 7 级判断标准	PASS
15	Characteristics 特性阻抗	The type of the equipment：DCA-J 86100C Test standard：NA	NA

4. Direction For Use 产品使用说明

4.1 保质期：包装好的产品在 20±10℃、:70%RH 湿度以下的环境中，可以储存 6 个月

4.2 该产品只适用开发段所对应机种/机型使用需求，不可以作为其它用途使用。若客户端延用到其它机种/机型，则需要向新亚确认是否能继续延用，若因没有通知新亚评估直接使用到其它机种/机型所造成的异常损失，苏州新亚电通有限公司不承担相应的异常责任

4.3 该产品符合制造国(中国)的法律法规要求，同时符合客户在开发段提供的交换目的国法律法规要求，若客户更改交换目的国，需要书面通知新亚，新亚评估是否符合对应国的法律法规要求，若客户在开发段不给予交换目的国的信息，则默认符合制造国的法律法规要求即可，若客户变更交换目的国没有书面通知苏州新亚，苏州新亚电通有限公司不承担因此造成的异常责任

Figure 1

导体规格	导体截面积	抗张强度判定标准
34#	0.02㎜²	＞0.3Kg
32#	0.03㎜²	＞0.5Kg
30#	0.05㎜²	＞1.2Kg
28#	0.08㎜²	＞1.5Kg
26#	0.13㎜²	＞2.5Kg
24#	0.21㎜²	＞4.0Kg
22#	0.33㎜²	＞5.0Kg
20#	0.5～0.55㎜²	＞7.0Kg
18#	0.82～1.0㎜²	＞10.0Kg
16#	1.3～1.5㎜²	＞15.0Kg
14#	2.0～2.5㎜²	＞17.0Kg
12#	3.3～4.0㎜²	＞22.0Kg
10#	5.3～6.0㎜²	＞33.0Kg
8#	8.3～9.0㎜²	＞40.0Kg
6#	13.3～14.0㎜²	＞44.5Kg
4#	21.1～21.5㎜²	＞62.3Kg
3#	26.6～26.8㎜²	＞71.2Kg
2#	33.6～33.8㎜²	＞80.1Kg
1#	42.4～42.7㎜²	＞89.0Kg

Figure 2

Items 测试项目	**Test conditions 测试条件**	**Criteria 判定标准**
Insertion force 插入力	With the corresponding conn is inserted in the 25±3mm/min	A端≤2.8Kg B 端≤2.8Kg
Pullout force 拔出力		A端≥0.8Kg B 端≥0.8Kg

PRODUCTION NAME：WIRE HARNESS			
Designed：Jodie	APVD：Aviv	Edition：D	File Name：ML1001
		DATE：2019.07.01	Page：6/8

线束使用注意事项

Wire Harness using Notes and Operation manual

由于线束产品的特殊性，在使用时，不正确的插入和拔出会使其端子易变形甚至可以导致产品功能失效，所以，线束产品在使用上要特别注意以下事项：

Due to the particularity of harness products, when in the using, Incorrect insertion and Pull out of the terminal is easy to deformation , even can to be lead to product function failure, so, Harness products in use should pay special attention to the following matters:

◆普通 LCD 线束/General LCD harness ：

1，在连接的 wafer 上插拔时，要水平向内插入。插入 housing 时需要捏住 housing 的底部或者距离线缆的 1-2mm 处水平的插入；不得向上、向下或者倾斜插拔，这样会使 housing PIN 口变形和端子功能区变形、扩孔。

When connecting to the wafer insertion and Pull out, need to Horizontal into insertion. When Insert housing you need to hold the bottom of the housing or distance in the cable 1-2mm location Horizontal into insertion, don’ t take up、take down or Tilt the insertion and Pull out, This will make housing PIN mouth deformation and terminal PIN mouth functional area deformation, reaming.

2，拔出 housing 时需要捏住 housing 的底部或者线缆的 1-2mm 处水平、均匀的拔出。不得使用蛮力拉拔、拉扯线缆使之拔出，这样会造成端子不定位或者线缆断裂等功能不良。

When Pull out the housing need to hold the bottom of the housing or distance in the cable 1-2mm location Horizontal Pull out, the Pull out power need Horizontal and uniform . do not use brute force drawing, pulling cable , this will cause the terminal is not positioning or cable breakage and other undesirable function.

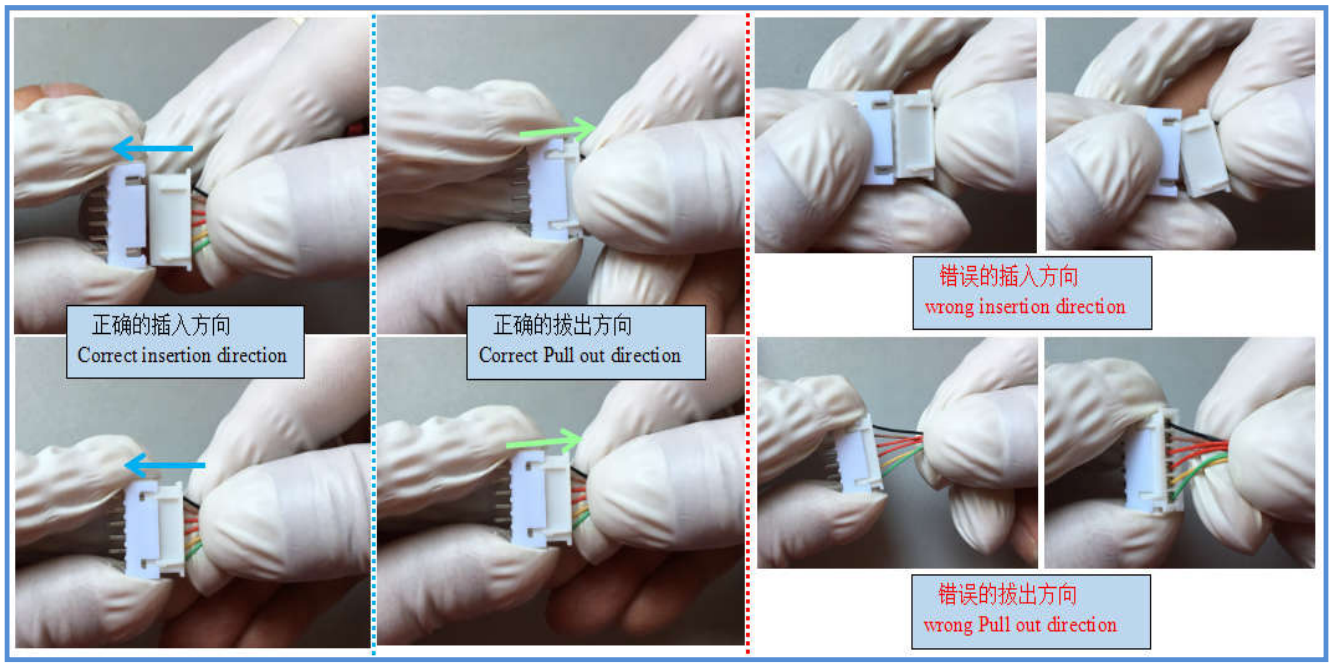

◆LVDS 线束/LVDS harness：

1，在连接的 wafer 上插拔时，要水平向内插入。插入 housing 时需要捏住 housing 的底部或者距离线缆的 1-2mm 处水平的插入或按压 housing 两侧的铁弹片插入；不得向上、向下或者倾斜插拔，这样会使 housing 塑胶体断裂或者端子的金手指变形、断 PIN。

When connecting to the wafer insertion and Pull out，need to Horizontal into insertion. When Insert housing you need to hold the bottom of the housing or distance in the cable 1-2mm location Horizontal into insertion or Press housing on both sides of the iron shrapnel，don’t take up、take down or Tilt the insertion and Pull out，this will break the housing plastic part or terminal finger deformation, broken PIN .

2，拔出 housing 时需要按压 housing 两侧的铁弹片处水平、均匀的拔出。不得使用蛮力拉拔、拉扯线缆受硬力使之拔出，这样会造成端子不定位或者线缆断裂等功能不良。

When Pull out the housing need to Press housing on both sides of the iron shrapnel ,the Pull out power need Horizontal and uniform .do not use brute force drawing, pulling cable ,this will cause the terminal is not positioning or cable breakage and other undesirable function.

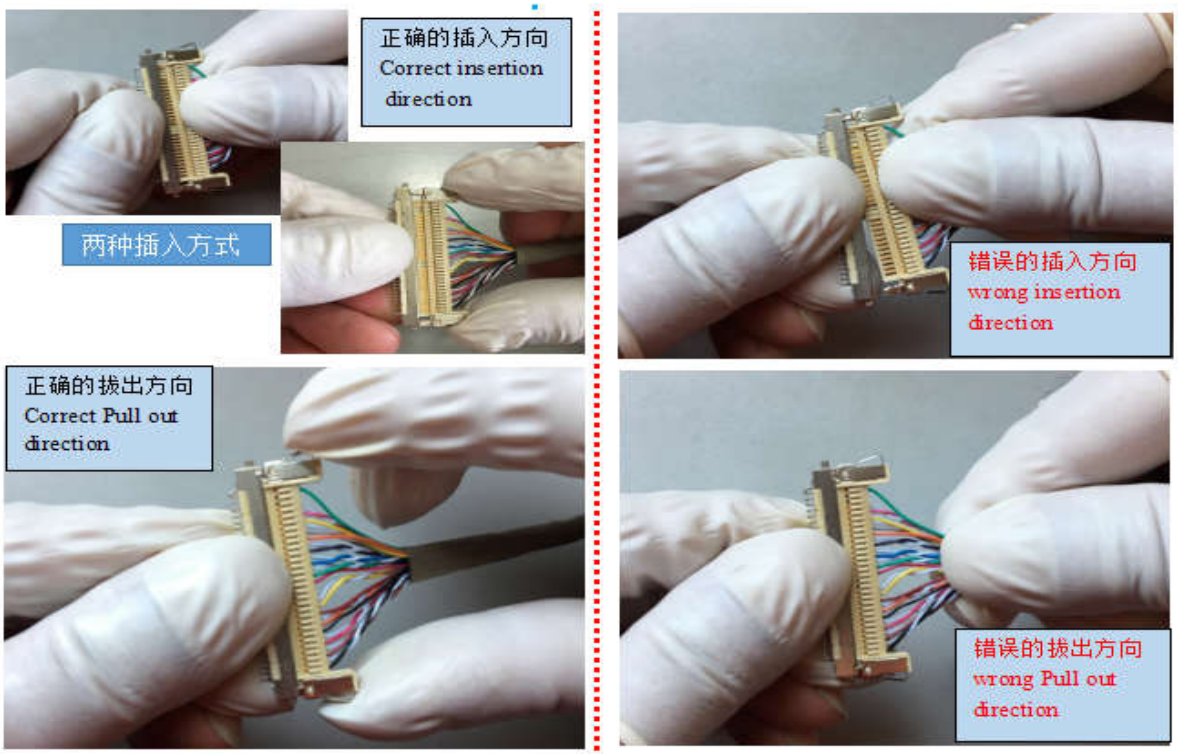

NOTE(S)：

1，要避开同其它物体的某些物理物体的直接接触。
To avoid direct contact with certain physical objects of other objects.

2，在高温高湿的场合下连续使用时，事先请采用实装的评价(评估)。
In the high temperature and high humidity occasions for continuous use, Please evaluate the

implementation (assessment).

3，在使用过程中，如不慎跌落地上或者其它可能使其粘上异物的情况下，必须将导体露出处的脏污清除干净后才能使用（清除异物时要顺着导体的方向，向外清除）。

In the course of using, Such as accidentally fell on the ground Or other conditions that may cause it to stick to a

foreign body, Must be to remove dirt exposed conductor clean after to used (removal of foreign matter to follow the direction of the conductor, outward clearance).

Product Specifications

(产品说明)

specification (规格): UL20276 10P*30AWG+4C*30AWG+AL+B

Item(项目)		Unit(单位)	Specification(规格)	
Product(规格)		-	10P*30AWG	4C*30AWG
CONDUCTOR (导体)	Number(芯数)	C	20	4
	Material(材质)	-	Tinned Copper(镀锡铜)	Tinned Copper(镀锡铜)
	Construction(结构)	pcs / mm	7/0.10TS±0.008	7/0.10TS±0.008
Insulation (绝缘体)	Material(材质)	-	PP	PP
	Avg.thickness(最小平均厚度)	mm	0.13	0.13
	Diameter(直径)	mm	0.60±0.05	0.60±0.05
	Color(颜色)	-	黄;橙;红;棕;黑;粉红;灰;紫;蓝;绿;黄/白;橙/白;红/白;棕/白;黑/白;粉红/白;灰/白;紫/白;蓝/白;绿/白	红/黑;红/黄;红/蓝;红/黄
TWISTED PAIR (对绞)	Direction(绞向)	-	S	\
	Color(颜色)	-	附下	\
	Material(材質)	-	\	\
	Overlap(重疊率)	pcs / mm	\	\
Assembly (集合)	Construction(结构)	-	10P*30AWG+4C*30AWG+AL	
	Material(材質)	-	Al-mylar(铝箔)	
	Overlap(重疊率)	pcs / mm	25% min	
	Filler(填充)	-	\	
	Drain(地线)	pcs / mm	\	
编织 BRAID	Material(材质)	-	Tinned Copper(镀锡铜)	
	Construction(結構)	-	16/8/0.12±0.008	
Jacket (外被)	Material(材质)	-	PVC	
	Avg.thickness(最小平均厚度)	mm	0.60(REF)	
	Color(颜色)	-	BLACK HALF MATT(黑色半雾面)	
	Overall Diameter(直径)	mm	6.5±0.20	
Marking (印字内容)	E519190 AWM STYLE 20276 80℃30V VW-1 AWM I/II A/B 80℃ 30V FT1 FuerTai			

截面示意图及芯线颜色：

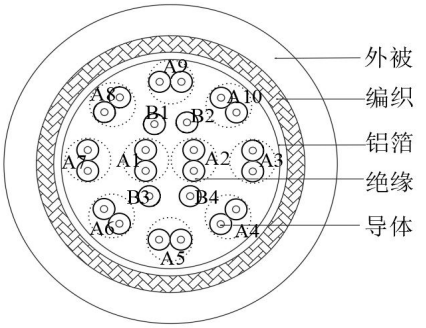

10P*30AWG:
A1.黑*黑/白 A2.棕*棕/白 A3.红*红/白 A4.橙*橙/白 A5.黄*黄/白 A6.绿*绿/白 A7.蓝*蓝/白 A8.紫*紫/白 A9.灰*灰/白 A10.分粉红*粉红/白
3C*30AWG:
B1.红/黑 B2.红/黄 B3.红/蓝 B4.红/黄

ELECTRICAL CHARACTERISTICS

1.Rating TEMP额定温度 80℃
2.Rating Voltage额定电压 30V
3.Conductor Resistance导体电阻 : at 20℃ (MAX) 30#:381Ω/km
4.lmpedance特性阻抗: 100±10 Ω

PHYSICAL PROPERTIES OF JACKET

1. 老化前抗张延伸Tensile strength Unaged:MIN10.3Mpa Aged MIN100%
2. 老化后Elongation : Unaged : 70%MIN Aged: 65%MIN
老化条件(UL1581):113±2℃ 168h
3.热冲击Heat shock test: 不开裂NO CRACKING
4.冷弯Cold bend test: 不开裂NO CRACKING
5.加热变形Deformation test: MAX 50%
6.燃烧测试Flame test: PASS VW-1

客户料号	/
我司料号	84246500

客户确认：

苏州福尔泰光电科技有限公司
传真：0512-69233679
电话：0512-50138559

APPROVED	YJ	CUSTOMER	
CHECKED	XXM	REV.	A/0
DRAWING	WY	DATE	2025.03.21

CERTIFICATE OF COMPLIANCE

Certificate Number	E519190
Report Reference	E519190-20210223
Date	2021-February-23

Issued to:

Suzhou Fuertai Electronic Co Ltd
No.68 Tongchuang Rd
Zhangpu Town, Kunshan Suzhou
Jiangsu, 215323 CN

This is to certify that representative samples of

APPLIANCE WIRING MATERIAL - COMPONENT

See Addendum Page for Styles.

Have been investigated by UL in accordance with the component requirements in the Standard(s) indicated on this Certificate. UL Recognized components are incomplete in certain constructional features or restricted in performance capabilities and are intended for installation in complete equipment submitted for investigation to UL LLC.

Standard(s) for Safety:

UL Subject 758, Appliance Wiring Material.

Additional Information:

See the UL Online Certifications Directory at https://iq.ulprospector.com for additional information

This *Certificate of Compliance* does not provide authorization to apply the UL Recognized Component Mark. Only the UL Follow-Up Services Procedure provides authorization to apply the UL Mark.

Only those products bearing the UL Recognized Component Mark should be considered as being UL Certified and covered under UL's Follow-Up Services.

Look for the UL Recognized Component Mark on the product.

Bruce Mahrenholz, Director North American Certification Program

UL LLC

Any information and documentation involving UL Mark services are provided on behalf of UL LLC (UL) or any authorized licensee of UL. For questions, please contact a local UL Customer Service Representative at http://ul.com/aboutul/locations/

CERTIFICATE OF COMPLIANCE

Certificate Number	E519190
Report Reference	E519190-20210223
Date	2021-February-23

This is to certify that representative samples of the product as specified on this certificate were tested according to the current UL requirements

STYLES SINGLE-CONDUCTOR THERMOPLASTIC-INSULATED WIRE:
2095,2464,2517,2661,2725,2835,2919,20276,20549,20866,21198,

Bruce Mahrenholz, Director North American Certification Program

UL LLC

Any information and documentation involving UL Mark services are provided on behalf of UL LLC (UL) or any authorized licensee of UL. For questions, please contact a local UL Customer Service Representative at http://ul.com/aboutul/locations/

XINYA ELECTRONIC CO.,LTD
TEL:86-0577-62866888 FAX:86-0577-62865999
http://www.xinya-cn.com

核准 APPROVED	审核 CHECKED	制作 DRAWING
石留建	周汉章	范平涛

规格承认书 Product Specifications

规格SPECIFICATION:		1571 28#TS
UL认证档案号UL Certificate NO.		E170689
项目ITEM		规 格 SPECIFICATION
导体 CONDUCTOR	线规AWG	28
	材质MATERIAL	镀锡铜 TINNED COPPER
	尺寸COND.SIZE	7/0.127±0.008mm
绝缘 INSULATION	标称厚度 Nominal Thickness	0.11㎜
	最小厚度 Min. Thickness	0.05㎜
	材质MATERIAL	聚氯乙烯 PVC
	OD外径	0.60±0.05
	颜色COLOUR	任意Optional
Conductor Resistance: Max(Ω/Km,20℃)		239
印 字 MARKING		

电气性能ELECTRICAL CHARACTERISTICS	物理性能PHYSICAL CHARACTERISTICS
1. 额定值Rating : 温度TEMP 80℃ ; 电压VOLTAGE 30V 2.浸水耐压Dielectric-Withstand Test:500V 3.火花电压Spark Test:1500V	1.抗张强度Tensile Strength: 1.05kgf/mm^2 2. 伸长率Elongation: Unaged: 100% min 3. 热冲击Heat shock test: 不开裂NO CRACKING 4. 冷弯Cold bend test: 不开裂NO CRACKING 5. 加热变形Deformation test: MAX 50% 6. 燃烧测试Flame test: PASS VW-1

剖面图Cross - Sectional View :

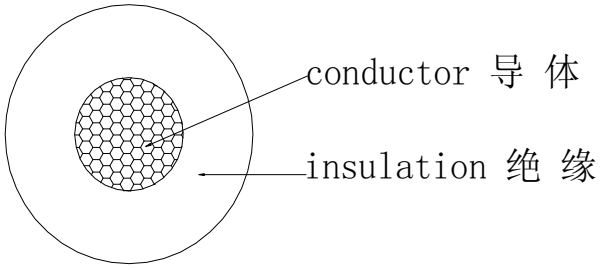

备 注 REMARK

图号 PART NO.	SP1109229	客户承认 APPROVED BY	

XINYA ELECTRONIC CO.,LTD

新亚电子有限公司

MATERIAL CERTIFICATE（Cu）

材料成份分析表（铜）

COMPONENT: 成分	RATIO（%） 含量
COPPER 铜	98.5
BISMUTH 铋	0.0002
ANTIMONY 锑	0.0004
ARSENIC 砷	0.0005
IRON 铁	0.001
LEAD 铅	0.0005
TIN 锡	1.3
SULFUR 硫	0.0015
OXYGEN 氧	0.00 1
SELENIUM 硒	0.0002
ARGENTUM 银	0. 0025
TE 碲	0. 0002

Pb≤100ppm(According to EPA3050B),Cd≤5ppm(According EN1122:2001)

根据 EN1122 和 EPA3050B 参照 SOSY 标准、铅≤100ppm　隔≤5ppm

新亚电子有限公司

品保部

2010.4.22

新 亚 电 子 有 限 公 司

XINYA ELECTRONIC CO.,LTD.

PVC 材质证明

（MATERIAL CERTIFICATION OF PLASTICIZED PVC COMPOUNDS）

MATERIAL 材料	PERCENT 百分比
PVC RESIN PVC 树脂	50%
FILLER(CaCO3) 填充剂(CaCO3)	15%
PLASTICIZER(DPHP/TOTM) 增塑剂(DPHP/TOTM)	28%
STABILIZER(Ca-Zn COMPOUNDS) 稳定剂（Ca-Zn 化合物）	4%
LUBRICANT(STERIC ACID) 润滑剂（硬脂酸）	0.50%
FIREPROOFENT（Sb_2O_3） 阻燃剂（Sb_2O_3）	2%
OTHER 其它	0.50%

新亚电子有限公司

品保部

2017-10-11

AVLV2.E170689
Appliance Wiring Material - Component

Page Bottom

Appliance Wiring Material - Component

See General Information for Appliance Wiring Material - Component

XINYA ELECTRONIC CO LTD E170689
WENZHOU BRIDGE INDUSTRIAL ZONE
YUEQING, ZHEJIANG 325603 CHINA

Table of Recognized Styles							
Single-conductor, thermoplastic insulation.							
1007	1095	1332	1431	1589	1674	10071	
1010	1107	1333	1452	1617	1685	10272	
1015	1185	1347	1500	1618	1691	10368	
1028	1316	1354	1533	1631	1792	10369	
1032	1330	1365	1569	1640	1887	10602	
1061	1331	1430	1571	1672	1901	10800	
Multiple-conductor, thermoplastic insulation.							
2095	2474	2562	2789	2877	20080	20624	21311
2096	2476	2651	2791	2881	20251	20696	
2405	2547	2689	2835	2896	20276	20798	
2408	2552	2725	2845	2919	20288	21099	
2464	2555	2733	2851	2960	20295	21143	
2468	2556	2734	2854	2990	20379	21307	
Single-conductor, thermoset insulation.							
3173	3271	3302	3347	3364	3443	3619	
3265	3272	3321	3348	3385	3485		
3266	3289	3346	3363	3386	3567		

Marking: Company name, voltage rating, temperature rating, conductor size, conductor material if other than copper, and use.
Last Updated on 2009-03-10

Questions? Notice of Disclaimer Page Top

Copyright ?2009 Underwriters Laboratories Inc.®

The appearance of a company's name or product in this database does not in itself assure that products so identified have been manufactured under UL's Follow-Up Service. Only those products bearing the UL Mark should be considered to be Listed and covered under UL's Follow-Up Service. Always look for the Mark on the product.

UL permits the reproduction of the material contained in the Online Certification Directory subject to the following conditions: 1. The Guide Information, Designs and/or Listings (files) must be presented in their entirety and in a non-misleading manner,

without any manipulation of the data (or drawings). 2. The statement "Reprinted from the Online Certifications Directory with permission from Underwriters Laboratories Inc." must appear adjacent to the extracted material. In addition, the reprinted material must include a copyright notice in the following format: "Copyright © 2009 Underwriters Laboratories Inc.®"

An independent organization working for a safer world with integrity, precision and knowledge



鸿蒙电子 hongmeng
KUNSHAN XINGHONGMENG ELECTRONIC CO.，LTD
TEL:0512-50191998 FAX:0512-50191996
http://www.szshongmeng.cn

核准 PPROVED	审核 CHECKED	制作 DRAWING
ZHU	LI	ZHAN

规格承认书 Product Specifications

REV:1.1

规格SPECIFICATION:		UL 1571 32#TS～14#TS									
项目ITEM		规 格 SPECIFICATION									
导体 CONDUCTOR	线规AWG	32	30	28	26	24	22	20	18	16	14
	材质MATERIAL	镀锡铜 TINNED COPPER									
	尺寸COND.SIZE	7/0.08±0.008	7/0.100±0.008	7/0.127±0.008	7/0.160±0.009	11/0.16±0.009	17/0.16±0.009	26/0.16±0.009	41/0.16±0.009	26/0.254±0.009	41/0.254±0.009
绝缘 INSULATION	标称厚度 Nominal Thickness	0.18㎜	0.20㎜	0.26㎜	0.26㎜	0.25㎜	0.27㎜	0.28㎜	0.30㎜	0.31㎜	0.41mm
	最小厚度 Min. Thickness	0.05㎜	0.05㎜	0.05㎜	0.05㎜	0.05㎜	0.05㎜	0.05㎜	0.05㎜	0.05㎜	0.05mm
	材质MATERIAL	聚氯乙烯 PVC									
	OD外径(MM)	0.60±0.05	0.70±0.05	0.60±0.05	1.00±0.05	1.10±0.05	1.30±0.05	1.50±0.10	1.80±0.10	2.10±0.10	2.70±0.10
	颜色COLOUR	任意Optional									
Conductor Resistance: Max(Ω/Km,20℃)		596	381	239	150	94.2	59.4	36.7	23.2	14.6	8.96
印 字 MARKING（≥0.8mm）		AWM 1571 E315421 VW-1 80℃ 30V XXAWG HONGMENG LM									
印字MARKING（OD＜0.8mm）		无印字									

电气性能ELECTRICAL CHARACTERISTICS	物理性能PHYSICAL CHARACTERISTICS
1. 额定值Rating : 温度TEMP 80℃ ; 电压VOLTAGE 30V 2.浸水耐压Dielectric-Withstand Test:500V 3.火花电压Spark Test:1500V	1.抗张强度Tensile Strength: 1.05kgf/mm^2 2. 伸长率Elongation: Unaged: 100% min 3. 热冲击Heat shock test: 不开裂NO CRACKING 4. 冷弯Cold bend test: 不开裂NO CRACKING 5. 加热变形Deformation test: MAX 50% 6. 燃烧测试Flame test: PASS VW-1

剖面图Cross - Sectional View :

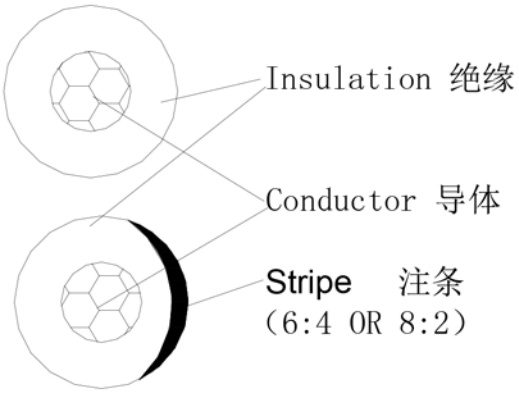

备 注 REMARK

图号 PART NO.	HM160503001	客户承认 APPROVED BY	

XINGHONGMENG ELECTRONIC CO.,LTD

兴鸿蒙电子有限公司

MATERIAL CERTIFICATE（Cu）

材料成份分析表（铜）

COMPONENT： 成分	RATIO（%） 含量
COPPER 铜	99.92
BISMUTH 铋	0.0002
STIBIUM 锑	0.0005
ARSENIC 砷	0.0005
IRON 铁	0.0005
NICKEL 镍	0.0004
LEAD 铅	0.0005
TIN 锡	0.07
SULFUR 硫	0.0001
OXYGEN 氧	0.006
ZINCUM 锌	0.0002
PHOSPHOR 磷	0.0005
ADMIUM 镉	0.00005

Pb≤50ppm(According to EPA3050B),Cd≤5ppm(According EN1122:2001)
根据 EN1122 和 EPA3050B 规定铅≤90ppm 镉≤5ppm

以上资料由本厂供方提供。其中镀锡线中锡的含量来自于铜丝的镀层，主要是防止铜丝氧化而特意加工为之，其它成份为自然界铜矿物质中自然含有的元素，无其它任何作用，也属非有意增加。

兴鸿蒙电子有限公司
工程部

2015 – 1 - 5

XINGHONGMENG ELECTRONIC CO.,LTD

兴鸿蒙电子有限公司

MATERIAL CERTIFICATE （PVC）
材料成份分析表（PVC）

COMPONENT： 成分	RATIO（%） 含量
PVC RESIN 聚氯乙烯树脂	55
PLASTICIZER 增塑剂	20
FILLER(CCR&Caco3) 填充	16.8
STABILIZER 稳定剂	5
RETARDANT(Sb2o3) 阻燃剂	2.5
LUBRICANT 润滑剂	0.4
PIGMENT 色粉	0.3

Pb≤50ppm(According to EPA3050B),Cd≤5ppm(According EN1122:2001)
根据 EN1122 和 EPA3050B 规定铅≤90ppm 镉≤5ppm

以上资料由本厂供方提供。

兴鸿蒙电子有限公司

工程部

2015 – 1 - 5

ONLINE CERTIFICATIONS DIRECTORY

AVLV2.E315421
Appliance Wiring Material - Component

Page Bottom

Appliance Wiring Material - Component

See General Information for Appliance Wiring Material - Component

KUNSHAN XINGHONGMENG ELECTRONIC CO LTD E315421
No. 1118 Jingban Rd
Shipai Industrial Area
Bacheng Town
Kunshan, Jiangsu 215312 CHINA

Table of Recognized Styles							
Single-conductor, thermoplastic insulation.							
1007	1185	1517	1618	1692	10064	10369	11136
1015	1332	1533	1637	1745	10086	10370	
1017	1354	1569	1640	1766	10231	10456	
1028	1430	1571	1672	1847	10248	10584	
1061	1500	1589	1674	1867	10316	10602	
1095	1516	1617	1685	1927	10368	10800	
Multiple-conductor, thermoplastic insulation.							
2095	2562	2835	2919	20375	20936	21088	
2464	2651	2844	2969	20376	20937	21099	
2468	2725	2851	2990	20379	20939	21139	
2547	2733	2854	20080	20549	21016	21143	
2555	2789	2877	20276	20694	21064	21311	
Single-conductor, thermoset insulation.							
3173	3271	3302	3348	3385	3443	3619	
3265	3272	3321	3363	3386	3485		
3266	3289	3347	3364	3398	3567		
Multiple-conductor, thermoset insulation.							
4384	4478						

Marking: Company name, voltage rating, temperature rating, conductor size, conductor material if other than copper, and use.

Last Updated on 2016-05-09

Questions? Print this page Terms of Use Page Top

© 2016 UL LLC

The appearance of a company's name or product in this database does not in itself assure that products so identified have been manufactured under UL's Follow-Up Service. Only those products bearing the UL Mark should be considered to be Certified and covered under UL's Follow-Up Service. Always look for the Mark on the product.

UL permits the reproduction of the material contained in the Online Certification Directory subject to the following

conditions: 1. The Guide Information, Assemblies, Constructions, Designs, Systems, and/or Certifications (files) must be presented in their entirety and in a non-misleading manner, without any manipulation of the data (or drawings). 2. The statement "Reprinted from the Online Certifications Directory with permission from UL" must appear adjacent to the extracted material. In addition, the reprinted material must include a copyright notice in the following format: "© 2016 UL LLC".

図面番号(DRAWING NO.) SP11-10909-04

版数 REV.	年月日 DATE	CN NO.	変更内容 DESCRIPTION	製図 DR.	担当 CHK.	査閲 APPD.	承認 APPD.

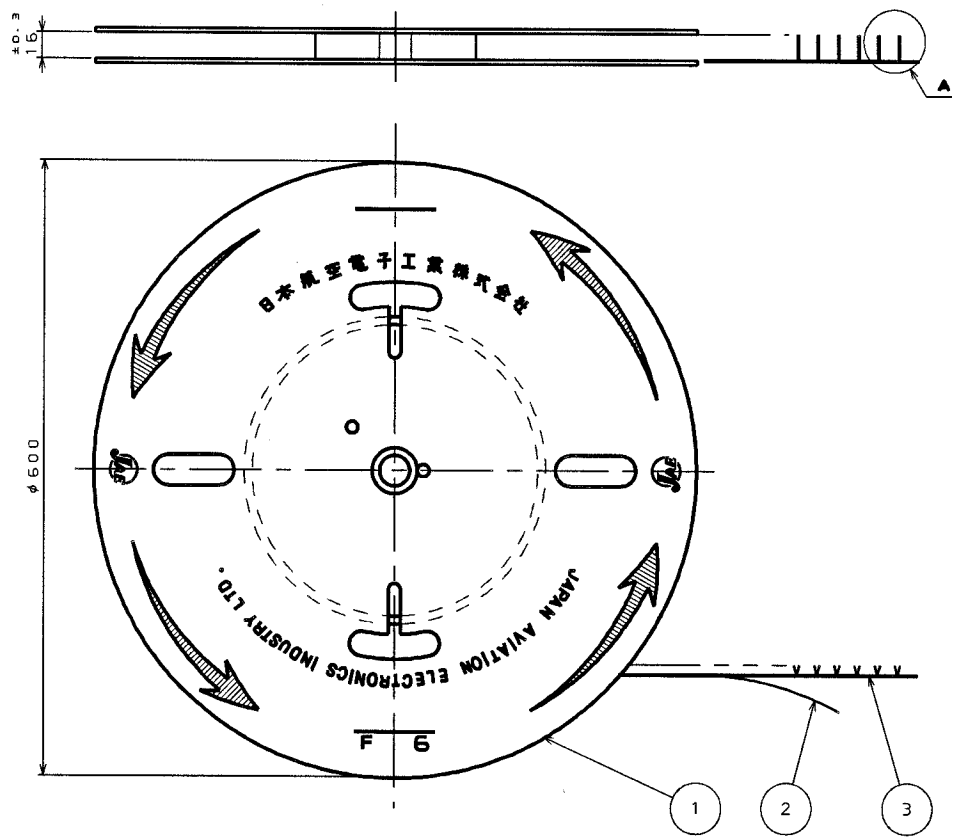

EXCLUDING CRIMP POT
クリンプポット部は除く

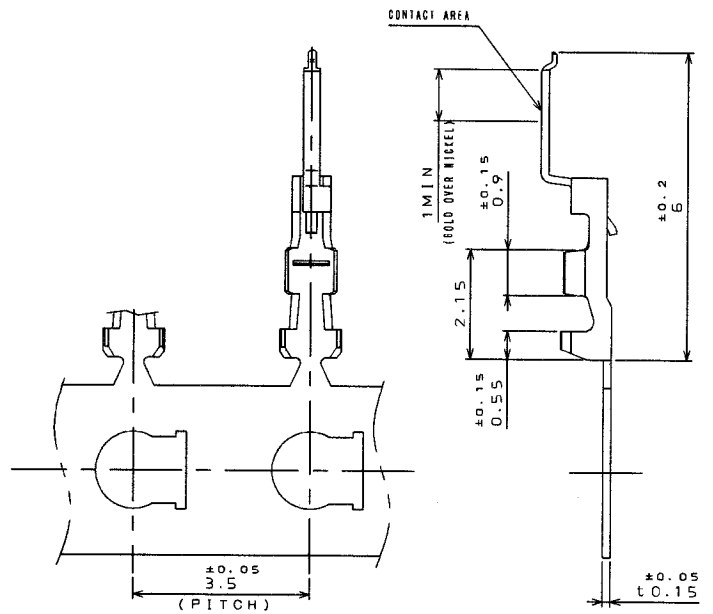

DETAIL A
A部詳細図
(SCALE 10:1)
(尺度 10:1)

符号 NO.	名称 DESCRIPTION	個数 QTY.	材料 MATERIAL	仕上 FINISH	備考 REMARKS
3	CONTACT コンタクト	15000	COPPER ALLOY 銅合金	CONTACT AREA :GOLD OVER NICKEL Ni上Auメッキ	CRIMP AREA:TIN PLATING Snメッキ
2	PAPER TAPE 紙リール	1	PAPER 紙		
1	MAGAZINE マガジン	1	PAPER 紙		

NOTE1. APPLICABLE WIRE: #30～#36 AWG. STANDERD.
2. INSULATION OUTER DIA. φ0.75～0.27mm

注1．使用電線は、AWG#30～#36の撚線とする。
2．被覆外径はφ0.75～0.27mmとする。

仕様書(SPECIFICATION)	
第1版(ORIGINAL DATE)	3.Feb.2012
製図 DR.	
担当 CHK.	K.HISAMATSU
査閲 APPD.	—
承認 APPD.	K.IBARAKI

一般公差(GENERAL TOLERANCE)

寸法(DIMENSION)	角度(ANGLES)
. ±0.8	X° ±
.X ±0.4	X°X' ±
.XX ±0.1	
.XXX ±	

尺度(SCALE)	—
シリーズ(SERIES)	FI-R
名称(TITLE)	FI-RNC3-1B-1E -15000-T MAGAZINE ASSEMBLY
質量(MASS)	

日本航空電子工業株式会社
JAPAN AVIATION ELECTRONICS INDUSTRY, LTD.

図面番号(DRAWING NO.)	版数(REV.)
SP11-10909-04	1

SIZE A3

JAE CONNECTOR DIV. PROPRIETARY.
COPYRIGHT (C) 2012. JAPAN AVIATION ELECTRONICS INDUSTRY, LTD.

DCF-C-2120(11.08)

版数 REV.	年月日 DATE	CN NO.	変更内容 DESCRIPTION	製図 DR.	担当 CHK.	査閲 APPD.	承認 APPD.

図面番号(DRAWING NO.) SP11-10909-03

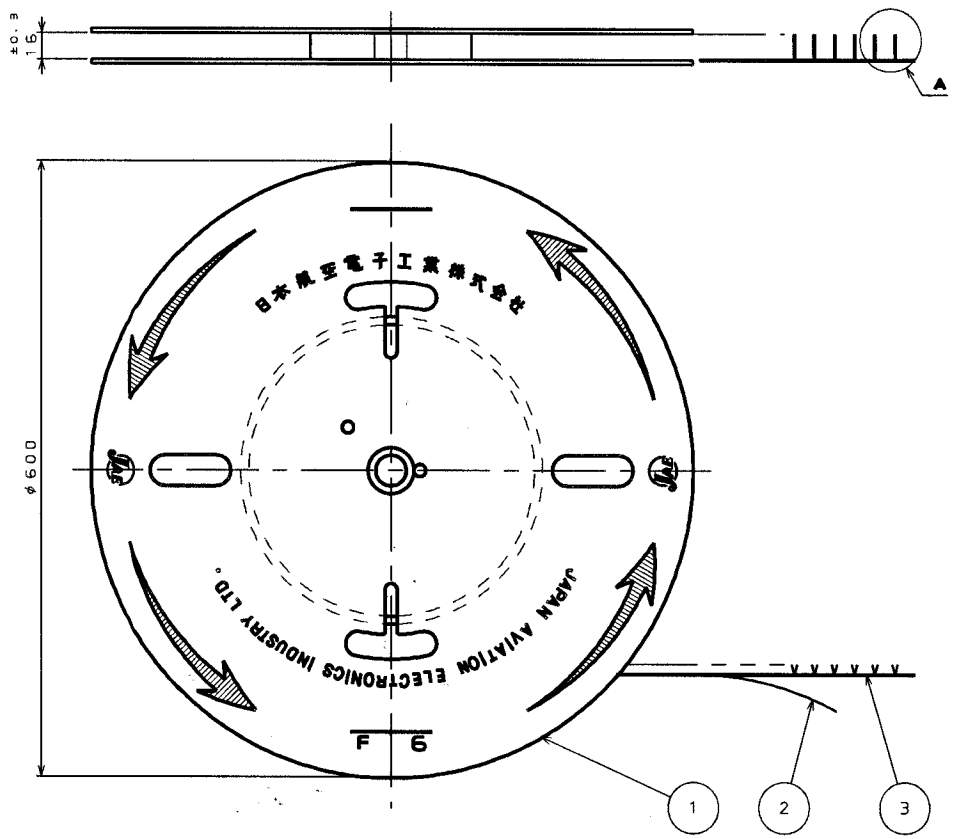

EXCLUDING CRIMP POT

クリンプポット部は除く

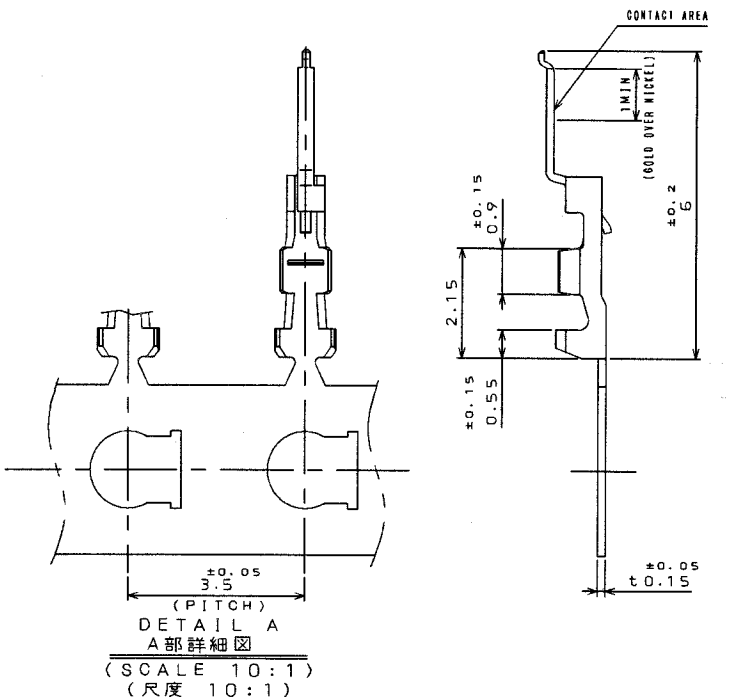

DETAIL A

A部詳細図

(SCALE 10:1)

(尺度 10:1)

符号 NO.	名称 DESCRIPTION	個数 QTY.	材料 MATERIAL	仕上 FINISH	備考 REMARKS
3	CONTACT コンタクト	15000	COPPER ALLOY 銅合金	CONTACT AREA :GOLD OVER NICKEL Ni上Auメッキ	CRIMP AREA:TIN PLATING Snメッキ
2	PAPER TAPE 紙リール	1	PAPER 紙		
1	MAGAZINE マガジン	1	PAPER 紙		

NOTE1. APPLICABLE WIRE: #30～#36 AWG. STANDERD.

2. INSULATION OUTER DIA. φ0.75～0.27mm

注1．使用電線は、AWG#30～#36の撚線とする。

2．被覆外径はφ0.75～0.27mmとする。

仕様書(SPECIFICATION)	
一般公差(GENERAL TOLERANCE)	
寸法(DIMENSION)	角度(ANGLES)
. ±0.8	X° ±
.X ±0.4	X°X' ±
.XX ±0.1	
.XXX ±	

第1版(ORIGINAL DATE)	3.Feb.2012
製図 DR.	
担当 CHK.	K.HISAMATSU
査閲 APPD.	—
承認 APPD.	K.IBARAKI

尺度(SCALE)	—
シリーズ(SERIES)	FI-R
名称(TITLE)	FI-RNC3-1A-1E -15000-T MAGAZINE ASSEMBLY
質量(MASS)	

日本航空電子工業株式会社
JAPAN AVIATION ELECTRONICS INDUSTRY, LTD.

図面番号(DRAWING NO.) SP11-10909-03

版数(REV.) 1

SIZE A3

0 10 20 30 40 50 60 70 80 90 100

DCF-C-2120(11.08)

JAE CONNECTOR DIV. PROPRIETARY.
COPYRIGHT (C) 2012. JAPAN AVIATION ELECTRONICS INDUSTRY, LTD.

図面番号(DRAWING NO.)
SJ103279

版数 REV.	年月日 DATE	DCN NO.	変更内容 DESCRIPTION	製図 DR.	担当 CHK.	査閲 APPD.	承認 APPD.

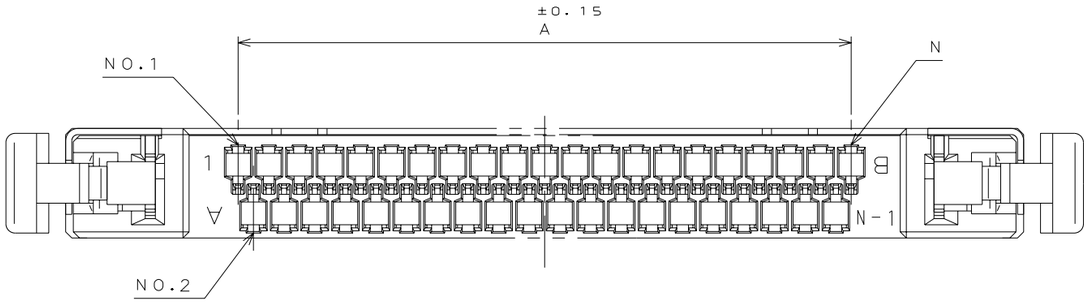

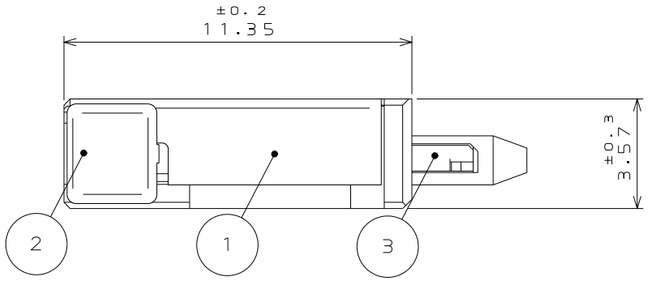

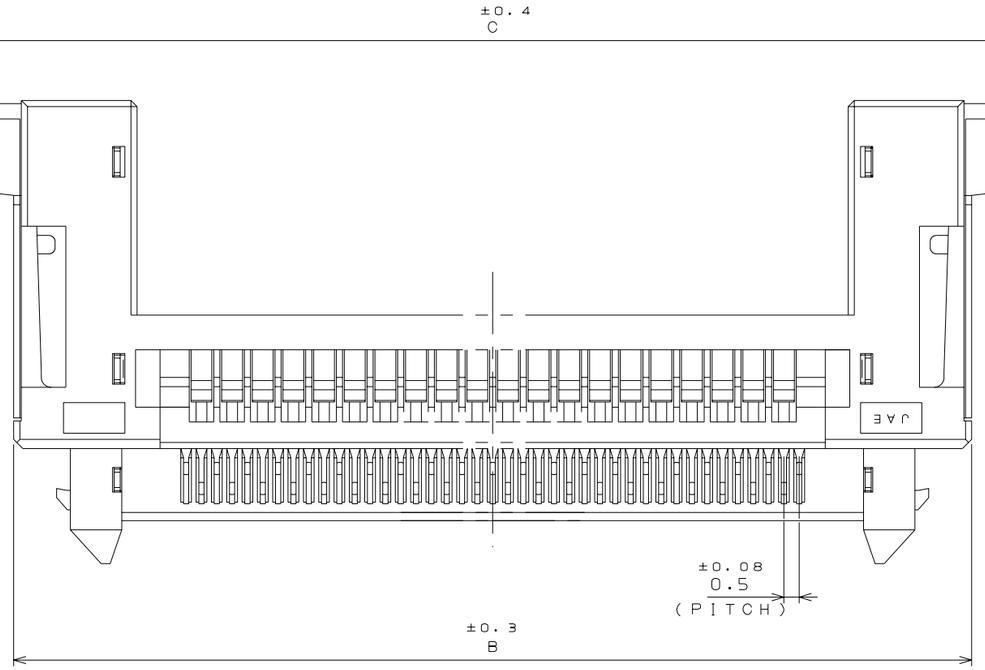

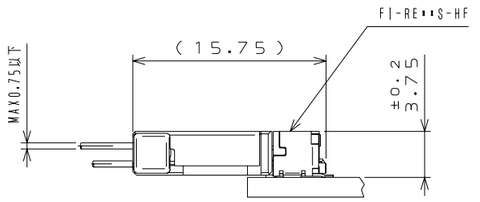

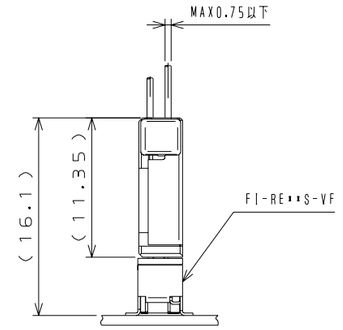

MATED CONDITION(REF.)
嵌合状態図(参考)

TABLE 1
表1

NO.OF CONTACTS(N) \ DEMENSION	A	B	C
21	10	21.25	24.95
31	15	26.25	29.95
41	20	31.25	34.95
51	25	36.25	39.95

REFERENCE ONLY
JAE

NOTE1.APPLICABLE CONTACT
FI-RC3-1A-1E-15000 AND FI-RC3-1B-1E-15000

注1.適合コンタクトは下記コンタクトを使用して下さい。
FI-RC3-1A-1E-15000及びFI-RC3-1B-1E-15000

NO. 符号	DESCRIPTION 名称	QTY. 個数	MATERIAL 材料	FINISH 仕上	REMARKS 備考
3	LOCK SPRING ロックスプリング	2	STAINLESS STEEL ステンレス		
2	INSULATOR インシュレータ	1	HEAT RESISTING PLASTIC 耐熱性プラスティック	———	UL94V-0
1	SHELL 圧入シェル	1	COPPER ALLOY 銅合金	TIN PLATING Snメッキ	

仕様書(SPECIFICATION)	第1版(ORIGINAL DATE) 14.Mar.2005	尺度(SCALE) 5:1	シリーズ(SERIES) FI-R
一般公差(GENERAL TOLERANCE) 寸法(DIMENSION) . ±0.8 .× ±0.4 .×× ±0.1 .××× ± 角度(ANGLES) ×° ± ×°× '±	製図 DR.	名称(TITLE) FI-RE※※HL	
	担当 CHK. K.HISAMATSU		
	査閲 APPD. M.SUZUKI		
	承認 APPD. K.HISATOMI		
		質量(MASS)	

日本航空電子工業株式会社
JAPAN AVIATION ELECTRONICS INDUSTRY, LTD.

図面番号(DRAWING NO.) SJ103279
版数(REV.) 1
SIZE A3

DCF-C-212E(03.08)

0 10 20 30 40 50 60 70 80 90 100

JAE CONNECTOR DIV. PROPRIETARY.
COPYRIGHT (C) 2005, JAPAN AVIATION ELECTRONICS INDUSTRY, LTD.

ECBT2.E149459
Connectors for Use in Data, Signal, Control and Power Applications - Component

Page Bottom

Connectors for Use in Data, Signal, Control and Power Applications - Component

See General Information for Connectors for Use in Data, Signal, Control and Power Applications - Component

JAE TAIWAN LTD E149459
INDUSTRIAL PARK
35 20 RD
TAICHUNG, 408 TAIWAN

Low voltage connectors, Model D02-M followed by 15 followed by P or S, followed by G-N-FO. Model D followed by A, B, C, D or E, followed by U, may be followed by F, followed by 9, 15, 25, 37 or 50, followed by P or S, may be followed by F or G, followed by FO. Model D followed by A, B, C or E, followed by LC-J, followed by 9, 15, 25 or 37, followed by P or S, followed by A, followed by F, G or J, followed by 1, 2 or 3, may be followed by 0, 1, 3, 4, 6 or 66, followed by L6, L8, L9, L11, L12 or L15, may be followed by F, may be followed by -1, 1B, 1W, 2W, S3 or A .

Model IL-G followed by 2 thru 15 followed by P or S, followed by S3, followed by C, L or T, followed by 2, may be followed by E, SA or SE, may be followed by T, may be followed by B, may be followed by Box. Models IL-S followed by 2 thru 15, followed by P or S, followed by S2, followed by C, L or T, followed by 2, may be followed by E or S, may be followed by F, may be followed by B, G, R or W. Model IL-T followed by 2 thru 15, followed by P-S2C2-W. Model IL-SDA followed by 3 thru 20, followed by P or S, followed by S2, followed by C, L or T, followed by 2, Model IL-WZ followed by 20, followed by P or S, followed by D125, followed by L or T, followed by T1, T2 or T25. Model JC20-J followed by 34 or 68, followed by S-F, followed by 1 thru 5, followed by A, followed by 1 thru 4. Model JC20-C followed by 45S-F1, followed by A1, A2 or A3, followed by 1 .

Marking: Company name and model designation on device or carton.

Last Updated on 1995-07-21

Questions? Notice of Disclaimer Page Top

Copyright ?2009 Underwriters Laboratories Inc.®

The appearance of a company's name or product in this database does not in itself assure that products so identified have been manufactured under UL's Follow-Up Service. Only those products bearing the UL Mark should be considered to be Listed and covered under UL's Follow-Up Service. Always look for the Mark on the product.

UL permits the reproduction of the material contained in the Online Certification Directory subject to the following conditions: 1. The Guide Information, Designs and/or Listings (files) must be presented in their entirety and in a non-misleading manner, without any manipulation of the data (or drawings). 2. The statement "Reprinted from the Online Certifications Directory with permission from Underwriters Laboratories Inc." must appear adjacent to the extracted material. In addition, the reprinted material must include a copyright notice in the following format: "Copyright © 2009 Underwriters Laboratories Inc.®"

An independent organization working for a safer world with integrity, precision and knowledge

一. 特性参数 Specifications

项　　目 Item		特性参数 Specifications
收缩温度（℃） Shrink Temperature		⩾125
连续使用温度（℃） Temperature Range		-40-125
轴向收缩率（%） Longitudinal Shrinking Ratio		-5~5
抗张强度（MPa） Tensile Strength		⩾10.4
断裂伸长率（%） Elongation Ratio		⩾200
空气烘箱老化 Aging in circulating-air oven		（158±1.0）℃，7天 （158±1.0）℃,7days
老化后 After aging	抗张强度（MPa） Tensile Strength	⩾7.3
	断裂伸长率（%） Elongation Ratio	⩾100
耐电压等级（V） Dielectric Voltage Withstand		600/300
体积电阻率（Ω·cm） Volume Resistivity		⩾10^{14}
击穿强度（V/mm） Dielectric Strength		2500V， 60s 内不击穿
裸铜腐蚀性 Corrosion of Bare Copper		无腐蚀 No corrosion
热冲击 Heat Shock		无裂纹 No cracking
冷弯曲 Cold Bend		无裂纹 No cracking
燃烧性 Flammability		VW－1
同心率（%） Concentricity		⩾65

二. 无卤无红磷热缩套管成品尺寸规格(CYG-ZHP Heat-shrinkable Tube Standard Sizes)。

（300V）

规 格 Size	收缩前尺寸 As Supplied		完全收缩后尺寸 After Recovery		流水号
	内 径(D) Inside Diameter	壁 厚(T) Wall-thickness	内 径(d) Inside Diameter	壁 厚(t) Wall-thickness	
Φ0.6	0.8+0.2/-0.1	0.13±0.03	≤0.40	0.20±0.06	000
Φ0.7	0.9+0.2/-0.1	0.13±0.03	≤0.45	0.22±0.06	000
Φ0.8	1.2+0.2/-0.1	0.13±0.03	≤0.45	0.23±0.06	000
Φ1.0	1.50±0.15	0.13±0.03	≤0.60	0.25±0.06	000
Φ1.5	2.00±0.15	0.13±0.03	≤0.80	0.25±0.06	000
Φ2.0	2.50±0.15	0.15±0.04	≤1.00	0.30±0.06	000
Φ2.5	3.00±0.15	0.15±0.04	≤1.25	0.30±0.06	000
Φ3.0	3.50±0.15	0.15±0.04	≤1.50	0.30±0.06	000
Φ3.5	4.00±0.20	0.15±0.04	≤1.75	0.30±0.06	000
Φ4.0	4.50±0.20	0.15±0.04	≤2.00	0.30±0.06	000
Φ4.5	5.00±0.20	0.15±0.04	≤2.25	0.30±0.06	000
Φ5.0	5.50±0.20	0.15±0.04	≤2.50	0.30±0.06	000
Φ6.0	6.50±0.20	0.18±0.05	≤3.00	0.36±0.06	000
Φ6.5	7.00±0.20	0.18±0.05	≤3.25	0.36±0.05	000
Φ7.0	7.70±0.30	0.18±0.05	≤3.50	0.36±0.05	000
Φ8.0	8.50±0.30	0.18±0.05	≤4.00	0.36±0.05	000
Φ9.0	9.50±0.30	0.18±0.05	≤4.50	0.36±0.05	000
Φ10	10.50±0.30	0.18±0.05	≤5.00	0.36±0.05	000
Φ11	11.50±0.30	0.18±0.05	≤5.50	0.36±0.05	000
Φ12	12.50±0.30	0.18±0.05	≤6.00	0.36±0.05	000
Φ13	13.50±0.30	0.18±0.04	≤6.50	0.36±0.06	000
Φ14	14.50±0.30	0.18±0.04	≤7.00	0.36±0.06	000
Φ15	15.50±0.30	0.18±0.04	≤7.50	0.36±0.06	000
Φ16	16.50±0.30	0.20±0.05	≤8.00	0.40±0.06	000
Φ17	17.50±0.30	0.20±0.05	≤8.50	0.40±0.06	000
Φ18	18.60±0.40	0.20±0.05	≤9.00	0.40±0.06	000
Φ20	20.60±0.40	0.20±0.05	≤10.00	0.40±0.06	000
Φ22	22.60±0.40	0.20±0.05	≤11.00	0.40±0.06	000
Φ25	25.70±0.40	0.20±0.05	≤12.50	0.40±0.06	000
Φ30	31.00±0.50	0.23±0.06	≤15.00	0.48±0.08	000
Φ32	32.00+2.00	0.25±0.08	≤16.00	0.48±0.08	000
Φ40	40.00+2.00	0.25±0.08	≤20.00	0.48±0.08	000
Φ60	61.00±2.00	0.30±0.08	≤30.00	0.60±0.10	000

三．无卤无红磷热缩套管工程图(CYG-ZHP Heat-shrinkable Tube Drawing)

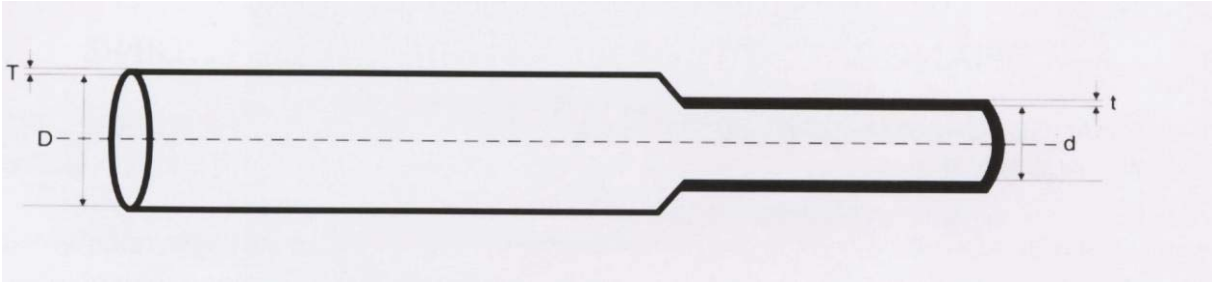

备注：如需印字：

300V 产品印字内容：CYG CYG-ZHP TUBE E180908 ® & ® 125℃ 300V VW-1 -F-(ΦSize as supplied /Size after recovery)

单位(Unit)： 毫米(mm)	日期(Date)： 2015/09/02	名称(Name)： CYG-ZHP 无卤无红磷热收缩套管	图号(No.)： CY/CD-CYG-ZHP

上海长园电子材料有限公司 Shanghai Changyuan Electronic Material Co.,Ltd.	绘制(Drawed by)： 庞赛珍	审核(checked by)： 达飞腾	批准(Approved by)： 卞文剑

ONLINE CERTIFICATIONS DIRECTORY

YDPU2.E180908
Tubing, Extruded Insulating - Component

Page Bottom

Tubing, Extruded Insulating - Component

See General Information for Tubing, Extruded Insulating - Component

CHANGYUAN ELECTRONICS GROUP CO LTD E180908
BLDG 30-4
SHENZHEN SCIENCE & INDUSTRY PARK
NAN SHAN
SHENZHEN, GUANGDONG 518057 CHINA

Cat. No.	Max V, rms	Max Oper Temp °C	Col Recognized	Oil Resistance Class	VW-1 Rated #
Flexible heat shrinkable polyolefin tubing.					
CYG-ZHP	600	125	All except clear	None	Yes
CB-HFT, CB-HFT(XY), CYG-MT	300	125	All except clear	None	Yes
CB-HFT, CB-HFT(XY), CYG-MT	600	125	All except clear	None	Yes
CB-HFT(TM)	600	125	All except clear	None	No
Flexible heat shrinkable radiation cross-linked polyolefin tubing.					
CB-1000	600	125	Black	None	No
Polytetrafluoroethylene (PTFE) not-heat-shrinkable tubing.					
CB-TT-L	150	200	All including clear	None	Yes
CB-TT-T	300	200	All including clear	None	Yes
CB-TT-S	600	200	All including clear	None	Yes
Polyvinyl Chloride (PVC) not-heat-shrinkable tubing.					
CB-300	300	105	Black and Clear	None	Yes
CB-600	600	105	Black and Clear	None	Yes
Flexible heat shrinkable polyolefin tubing with liner.					
CB-DWT, CB-DWT(XY)	600	125	Black	None	Yes
Flexible Heat-Shrinkable Modified Fluoropolymer tubing.					
CYG-KYNAR	600	150	Clear	None	Yes
CYG-KT	600	150	All including Clear	None	Yes
Not Heat-Shrinkable Silicone Rubber tubing.					
CB-SRT	600	150	Black	None	Yes
CB-SRT	600	150	All Color except Clear and black	None	$

- Tubing is considered to comply with the optional VW-1 flammability requirements only if it is so marked.

$ - Authorization for VW-1 flammability is for sizes 6.5-25.0 mm only.

XY represents any numeric or alpha combination.

Marking: Company name or file number "E180908" or trademark  , catalog number, temperature rating in degrees C, voltage rating, inside diameter (before and after recovery in case of heat shrinkable tubing) and date of manufacture shall be marked on tags attached to both ends of the tubing or on the shipping spool label or on the smallest unit container.

Last Updated on 2015-07-29

Questions? Print this page Terms of Use Page Top

© 2015 UL LLC

The appearance of a company's name or product in this database does not in itself assure that products so identified have been manufactured under UL's Follow-Up Service. Only those products bearing the UL Mark should be considered to be Certified and covered under UL's Follow-Up Service. Always look for the Mark on the product.

UL permits the reproduction of the material contained in the Online Certification Directory subject to the following conditions: 1. The Guide Information, Assemblies, Constructions, Designs, Systems, and/or Certifications (files) must be presented in their entirety and in a non-misleading manner, without any manipulation of the data (or drawings). 2. The statement "Reprinted from the Online Certifications Directory with permission from UL" must appear adjacent to the extracted material. In addition, the reprinted material must include a copyright notice in the following format: "© 2015 UL LLC".

标准颜色:黑色、白色,其它颜色如红色、蓝色、黄色、绿色、紫色、灰色、棕色等可根据客户要求定做。

4.7 使用方法 在使用过程中,为了保证热缩套管能完全收缩到位,使用强制鼓风式恒温烘箱,并将收缩温度

控制在 125℃。特别注意,当把热缩套管放入烘箱过程中,烘箱温度有一下降趋势,要达到设定温度需要一定的时间;同时,在烘箱内通过热空气循环流动使热缩套管达到最终收缩温度同样需要一定的时间。因此,必须在烘箱实际温度达到设定温度并保持该温度 3 分钟左右,热缩套管才能完全收缩到位。

表 1 无卤无红磷阻燃型热收缩套管的性能特性

性能			测试方法	性能指标
物理性能	拉伸强度/MPa		GB/T1040	≥10.4
	断裂伸长率/%		GB/T1040	≥200
	热老化后拉伸强度/MPa		UL224;158℃×168h	≥7.3
	热老化后断裂伸长率/%		UL224;158℃×168h	≥100
	耐热冲击		UL224;250℃×4h	不流淌,不龟裂,不滴落
	抗冷弯曲		UL224;-30℃×1h	不龟裂
	耐电压	300V	UL224	1500V 不击穿
		600V		2500V 不击穿
	击穿强度/KV/mm		GB/T1408	≥15
	体积电阻率/Ω•cm		GB/T1410	$\geq 1\times10^{14}$
化学性能	铜安定性		UL224;158℃×168h	PASS
	抗腐蚀性		UL224;158℃×168h	PASS
	阻燃性		UL224	VW-1

表 2 300V 无卤无红磷薄壁阻燃型热收缩套管(H9 套管)的产品尺寸要求

规格	收缩前尺寸(mm)		收缩后尺寸(mm)		包装	适用范围
(mm)	内径	壁厚	内径	壁厚	米/盘	(mm)
Φ 0.6CB	0.90±0.2	0.15±0.05	≤0.40	0.25±0.10	200	0.5～0.7
Φ 0.8CB	1.10±0.2	0.15±0.05	≤0.50	0.25±0.10	200	0.65～0.8
Φ 1.0CB	1.40±0.2	0.15±0.05	≤0.65	0.25±0.10	200	0.85～1.0
Φ 1.5CB	1.90±0.2	0.15±0.05	≤0.85	0.25±0.10	200	1.00～1.4
Φ 2.0CB	2.40±0.2	0.15±0.05	≤1.00	0.28±0.10	200	1.30～1.8
Φ 2.5CB	2.90±0.2	0.15±0.05	≤1.30	0.28±0.10	200	1.50～2.3
Φ 3.0CB	3.40±0.2	0.15±0.05	≤1.50	0.28±0.10	200	1.80～2.7

Φ 3.5CB	3.90±0.2	0.15±0.05	≤1.80	0.28±0.10	200	2.00～3.2
Φ 4.0CB	4.40±0.2	0.15±0.05	≤2.00	0.30±0.10	200	2.30～3.6
Φ 4.5CB	4.90±0.2	0.15±0.05	≤2.30	0.30±0.10	100	2.50～4.0
Φ 5.0CB	5.50±0.2	0.15±0.05	≤2.5	0.32±0.10	100	3.00～4.5
Φ 6.0CB	6.50±0.2	0.15±0.05	≤3.0	0.32±0.10	100	3.50～5.4
Φ 7CB	7.50±0.3	0.15±0.05	≤3.5	0.32±0.10	200	4.00～6.3
Φ 8CB	8.50±0.3	0.15±0.05	≤4.0	0.32±0.10	200	4.50～7.2
Φ 9CB	9.50±0.3	0.15±0.05	≤4.5	0.35±0.10	200	5.00～8.2
Φ 10CB	10.5±0.3	0.15±0.05	≤5.0	0.35±0.10	200	5.50～9.2
Φ 11CB	11.5±0.3	0.18±0.05	≤5.5	0.40±0.10	200	6.0～10.2
Φ 12CB	12.5±0.3	0.20±0.05	≤6.0	0.40±0.10	200	6.5～11.2
Φ 13CB	13.5±0.3	0.20±0.05	≤6.5	0.40±0.10	200	7.0～12.2
Φ 14CB	14.5±0.3	0.20±0.05	≤7.0	0.40±0.10	200	7.5～13.2
Φ 15CB	15.5±0.4	0.20±0.05	≤7.5	0.40±0.10	200	8.0～14.2
Φ 16CB	16.5±0.4	0.22±0.05	≤8.0	0.40±0.10	200	8.5～15.1
Φ 17CB	17.5±0.4	0.22±0.05	≤8.5	0.40±0.10	200	9.0～16.1
Φ 18CB	18.5±0.4	0.22±0.05	≤9.0	0.42±0.10	200	9.5～17.1
Φ 20CB	20.5±0.5	0.25±0.05	≤10.0	0.45±0.10	200	10.5～18.1
Φ 22CB	22.5±0.5	0.25±0.05	≤11.0	0.45±0.10	200	11.5～20.0
Φ 25CB	25.5±0.5	0.25±0.05	≤12.5	0.45±0.10	100	13.0～22.0

表 3　　600V 无卤无红磷阻燃型热收缩套管(H9 套管)的产品尺寸要求

规格(mm)	收缩前尺寸(mm)		收缩后尺寸(mm)		标准包装	适用范围(mm)
	内径	壁厚	最大内径	壁厚	米/盘	
Φ 0.6	0.9±0.2	0.18±0.05	≤0.40	0.33±0.10	200	0.50～0.7
Φ 0.8	1.1±0.2	0.18±0.05	≤0.50	0.33±0.10	200	0.65～0.8
Φ 1.0		1.5±0.2	0.20±0.05	≤0.65	0.36±0.10	200	0.85～0.9
Φ 1.5		2.0±0.2	0.20±0.05	≤0.85	0.36±0.10	200	1.0～1.3
Φ 2.0		2.5±0.2	0.20±0.05	≤1.00	0.45±0.10	200	1.3～1.8
Φ 2.5		3.0±0.2	0.20±0.05	≤1.30	0.45±0.10	200	1.5～2.3
Φ 3.0		3.5±0.2	0.20±0.05	≤1.50	0.45±0.10	200	1.8～2.8
Φ 3.5	4.0±0.2	0.23±0.05	≤1.80	0.45±0.10	200	2.0～3.3
Φ 4.0	4.7±0.2	0.25±0.05	≤2.00	0.45±0.10	200	2.3～3.8
Φ 4.5	5.0±0.2	0.28±0.05	≤2.30	0.45±0.10	100	2.5～4.5
Φ 5.0	5.5±0.2	0.28±0.05	≤2.50	0.56±0.10	100	3.0～4.8

规格(mm)	收缩前尺寸(mm)		收缩后尺寸(mm)		标准包装	适用范围(mm)
Φ 6.0	6.5±0.2	0.28±0.05	≤3.00	0.56±0.10	100	3.5～5.3
Φ 7.0	7.5±0.3	0.30±0.05	≤3.50	0.56±0.10	100	4.0～6.3
Φ 8.0	8.5±0.3	0.30±0.08	≤4.00	0.56±0.10	100	4.5～7.2
Φ 9.0	9.5±0.3	0.30±0.08	≤4.50	0.56±0.10	100	5.0～8.2
Φ 10	10.5±0.3	0.30±0.08	≤5.00	0.56±0.10	100	5.5～9.2
Φ 12	12.5±0.3	0.30±0.08	≤6.00	0.56±0.10	100	6.5～10.2
Φ 14	14.5±0.3	0.35±0.10	≤7.00	0.70±0.10	100	7.5～12.2
Φ 15	15.5±0.4	0.35±0.10	≤7.50	0.70±0.10	100	8.0～14.2
Φ 16	16.5±0.4	0.35±0.10	≤8.00	0.70±0.10	100	8.5～15.2
Φ 18	19.0±0.5	0.35±0.10	≤9.00	0.70±0.10	100	10.0～16.1
Φ 20	22.0±0.5	0.40±0.10	≤10.00	0.80±0.10	100	10.4～18.5
Φ 22	24.0±0.5	0.40±0.12	≤11.00	0.80±0.15	100	12.5～21.5
Φ 25	26.0±0.5	0.45±0.12	≤12.50	0.90±0.15	50	14.0～23.5
Φ 28	29.0±0.5	0.45±0.12	≤14.00	0.90±0.15	50	15.0～25.5
Φ 30	31.5±1.5	0.45±0.12	≤15.00	1.00±0.15	50	17.5～28.5
Φ 35	36.5±1.5	0.45±0.12	≤17.50	1.00±0.15	50	20～30
Φ 40	41.5±1.5	0.50±0.12	≤20.00	1.00±0.15	50	21～35

注:如果客户需无卤无红磷环保热缩套管，须在订单上注明。

φ 0.8 以上 H9 产品印字内容(以 φ 5.0 为例):

E203950 c UL us Ⓦ WOER RSFR-HPF TUBE 125℃ VW-1 (φ 5.0)

超薄印字内容(以 φ 5.0 为例):

E203950 c UL us Ⓦ WOER RSFR-HPF TUBE 125℃ VW-1 (φ 5.0 CB)

φ 0.8 及以下 H9 产品，印字内容(以 φ 0.8 为例):

E203950 c UL us Ⓦ WOER RSFR-H TUBE 125℃ VW-1 HPF(φ 0.8)

超薄印字内容(以 φ 0.8 为例):

E203950 c UL us Ⓦ WOER RSFR-H TUBE 125℃ VW-1 HPF(φ 0.8 CB)

NOTICE OF AUTHORIZATION TO APPLY THE UL MARK

07/27/2012

Shenzhen Woer Heat-shrinkable Material Co Ltd
Mr. YORWAY SHORE
Xinwei Industrial Park, Woer Mansion
Nanshan District, Xili
Shenzhen Guangdong 518052, Cn

Our Reference:	File E203950, Vol. 2, New Section 6	Project Number	11SC04650
Your Reference:	YORWAY SHORE		
Project Scope:	UR/c-UR. Component – Extruded Insulating Tubing: Evaluation of new flexible heat shrinkable irradiation-cross-linked polyolefin tubing Cat. No. RSFR-HPF, rated 125°C, 600 V, VW-1 flame, All color except Clear		

Dear Mr. YORWAY SHORE:

UL's investigation of your product(s) has been completed under the above Reference Number and the product was determined to comply with the applicable requirements.

This letter temporarily supplements the UL Follow-Up Services Procedure and serves as authorization to apply the UL Mark only at authorized factories under UL's Follow-Up Service Program.

To provide the manufacturer with the intended authorization to use the UL Mark, the addressee must send a copy of this notice to each manufacturing location currently authorized in File E203950, Vol. 2, New Section 6.

This authorization is effective from the date of this Notice and only for products at the indicated manufacturing locations. Records in the Follow-Up Services Procedure covering the product are now being prepared and will be sent in the near future. Until then, this letter authorizes application of the UL Mark for 90 days from the date of this letter.

Products that bear the UL Mark shall be identical to those that were evaluated by UL and found to comply with UL's requirements. If changes in construction are discovered, appropriate action will be taken for products not in conformance with UL's requirements and continued use of the UL Mark may be withdrawn. UL may elect to withdraw use of the UL Mark if the Applicant or Manufacturer fails to comply with UL's requirements including ongoing compliance of the product, under UL's Follow-Up Service.

Any information and documentation provided to you involving UL Mark services are provided on behalf of UL LLC (UL) or any authorized licensee of UL.

The contents of this Letter are intended solely for the use of UL and the Applicant. The opinions and findings of UL represent its judgment given with due consideration to the necessary limitations of practical operation in accordance with UL's objectives and purposes. UL shall not otherwise be responsible for the use of or reliance upon the contents of this letter by anyone. UL shall not incur any obligation or liability for any loss, expense or damages, including incidental, consequential or punitive damages, arising out of or in connection with the use or reliance upon the contents of this letter to anyone other than the Applicant as provided in the agreement between UL and Applicant. Any use or reference to UL's name or certification mark(s) by anyone other than the Applicant in accordance with the agreement is prohibited without the express written approval of UL.

Very truly yours,

Celeste C. Dumadaug
408-754-6567
Engineering Project Handler
Celeste.C.Dumadaug@ul.com

Reviewed by:

Janeann P. Matulich
408-754-6654
Engineering Associate Lead
Janeann.P.Matulich@ul.com

SCLC342-370F41

HF

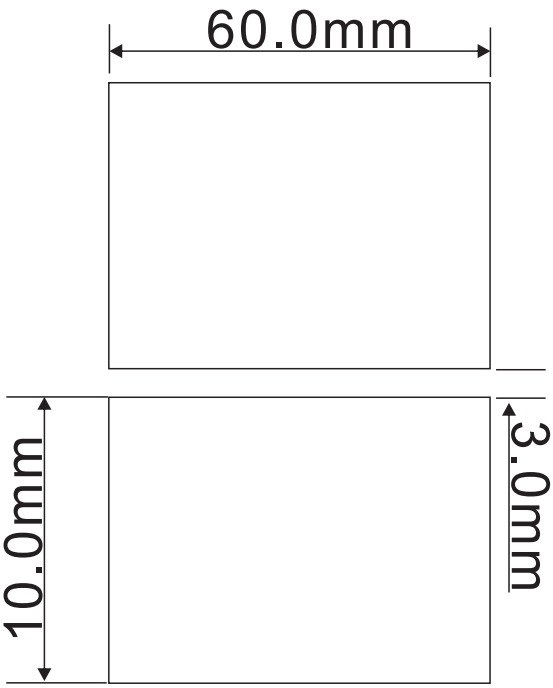

备注:

1.标签尺寸: 60mm*10mm

2.外形公差:±0.2mm

3.标签材质: 合成纸

4.颜色 : 白色底

5.R角0.5

6.纸管内径:76mm

7.单卷包装数量 : 5000pcs。

客　户	新亚电通	品 名	空白条码纸	料 号	LABEL1086-HF
制作员	周玉凤	规 格	60mm*10mm	颜 色	白色底
校对员	刘　刚	制 作 日 期	2016-07-15	材 质	合成纸
审　核	刘舵明	日 期	2016-07-15	吴江市铭宝电子有限公司	

Declaration

We, _____Suzhou Xinya Electric Communication Co,.Ltd _____**, hereby declare that the phthalates DEHP, DBP and BBP must not be intentionally added in parts, components, materials, or products provided to Qisda. In addition, each phthalate(DEHP, DBP and BBP) if be detected as impurities in parts, components, materials, or products must not be present in concentrations greater than 0.1%(1000 ppm) by weight in any homogeneous material.**

Restricted phthalates list as below:

CAS No.	Substances
117-81-7	Di(2-ethylhexyl) phthalate (DEHP)
84-74-2	Dibutyl phthalate (DBP)
85-68-7	Benzyl butyl phthalate (BBP)

[illegible]

Signature

经理

Title

2013.7.26

Date

SUZHOU XINYA ELECTRIC COMMUNICATION CO., LTD. 苏州新亚电通有限公司 3205000094651

Company (Please stamp the company seal)