承　认　书

SPECIFICATION　FOR　APPROVAL

客 户 名 称：	鈺緯科技開發股份有限公司
品　　名：	CABLE BRACKET CUSHION (RUG5513AMI) CUSHION CABLE BKT RUG5513AMI
規格/材质：	31.3*24/HH-48C+T4000
客 户 料 號：	3MD664TH040 (M3487) 4G.64611.001
供应商名称：	俐达科技电子（昆山）有限公司
日　　期：	2025/7/11

核　　准	审　　核	制　　作
廖子豪	廖子豪	胡芹

客户承认签署

审　　核	品　　保	工　　程
設計驗證 工程課 2025 -07- 17 發行 鈺緯科技開發股份有限公司		

REV.	DATE	DESCRIPTION	BY	APVD

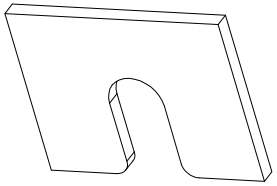

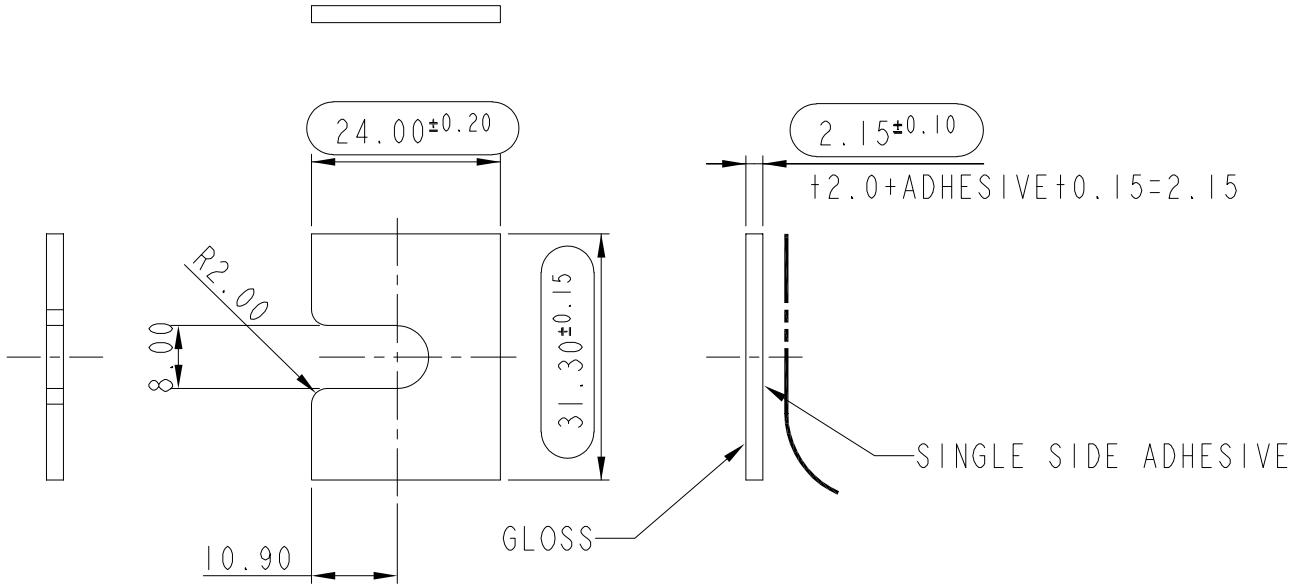

設計驗證
工程課
2025 -07- 17
發行

4G.64611.001

NOTES:
1. MATERIAL:PORON(HH-48C), GLOSS, t=2.0mm.
2. COLOR: BLACK.
3. ADHESIVE: SONY T4000, t=0.15mm(SINGLE SIDE).
4. IQC INSPECTION DOCUMENT NO: QWI-024.

RANGE OF DIMENSION	TOLERANCE CLASS DESIGNATION V f	V m	V c	THIRD ANGLE PROJECTION	UNITS:mm	SCALE: 1/1	SHEET: 1 OF 1	MODEL NO.: ALL MODEL
					MATERIAL: PORON		TREATMENT: NONE	
UP TO 30	±0.10	±0.20	±0.50	DSGD by Ferris Tsai	Apr-23-24	PART NAME: CABLE BRACKET CUSHION		
ABOVE 30~120	±0.15	±0.30	±0.80	CHK by				
ABOVE 120~315	±0.20	±0.50	±1.20	APVD by	2024-04-23	PART NO.: 3MD664TH040	REV. 0	
ABOVE 315~1000	±0.30	±0.80	±2.00	APVD NO.: M3487	3D FILE NAME: 55_FLEX_CABLE_BKT_CUSHION	DIVA Laboratories, Ltd.		
ANGLE ±1° (±1.75/100)								

Qisda Dimension Approval Sheet

Part No: 4G.64611.001	Material:HH-48C+T4000
Desc:HH-48C+T4000	Color:
Model Name：RUG5513AMI	Date: 2024/4/24
Vender: 1954	

Inspection Gauge:

Caliper .....(C)	Thickness Gauge ..... (T)	Gauge Block ..... (B)	
Micrometer ..... (M)	Height Gauge ..... (H)	Go. No-Go ..... (G)	
Opt. Comparator ..... (O)	Dial Indicator ..... (D)	Microscope ..... (S)	
Pin Gauge .....(P)	Flexible Rule ..... (F)		

Disttibution	
R&D	√
QC	√
Purchase	
Vender	√

Item	Check Code	Part Portion	Specifcation	+Tol	-Tol	Cav NO	Part Reading/Condition				Judge OK/NG	Remark
							Sample1	Sample2	Sample3	RD check sample		
1	1		24	0.2	-0.2		24.11	24.12	24.13	24.15	OK	
2	2		31.3	0.15	-0.15		31.36	31.35	31.34	31.36	OK	
3	3		10.9	0.2	-0.2		10.95	10.96	10.94	10.92	OK	
4			8	0.2	-0.2		8.11	8.12	8.12	8.13	OK	
5			2	0.2	-0.2		2.03	2.04	2.05	2.06	OK	
6			2.15	0.1	-0.1		2.15	2.15	2.14	2.15	OK	
7												
8												
9												
10												
11												
12												
13												
14												
15												
16												
17												
18												
19												
20												
21												
22												
23												
24												
25												
26												
27												
28												
29												
30												
31												
32												
33												
34												
35												
36												

Initiator: 朱晓

Approved By:Ferris Tsai

AP_GP BOM Report

Qisda P/N	4G.64611.001
Qisda Item description	CUSHION CABLE BKT RUG5513AMI
Maker	LIH DAR
Maker P/N	4G.64611.001
Create date	2024/04/25

Component type	Description	Supplier	Subpart type	Subpart Description	Subpart Supplier	Sample Description	Remark	Report No.	Test Date	Cd	Pb	Hg	Cr6+	PBBs/PBDEs	Br	Cl	Br+Cl	DIBP	DEHP	BBP	DBP	F	I	Exemptions
Gasket/Sponge	HH-48 HH-48C	ROGERS	Sponge	HH-48 HH-48C	ROGERS	BLACK SHEET(HH-48)		ETR23405805;ETR23405806	2023/05/10;2023/05/10	N.D	N.D	N.D	N.D	N.D	N.D	N.D	N.D	N.D	N.D	N.D	N.D	N.D	N.D	
Plastic film/Mylar	T4000	DEXERIALS	Adhesive	T4000	DEXERIALS	transparent adhesive		ETR23603807;ETR23603808	2023/06/30;2023/06/30	N.D	N.D	N.D	N.D	N.D	N.D	N.D	N.D	N.D	N.D	N.D	N.D	N.D	N.D	
Summary data										N.D	N.D	N.D	N.D	N.D	N.D	N.D	N.D	N.D	N.D	N.D	N.D	N.D	N.D	