MESSRS DATE

承认书

SPECIFICATION

DISCRIPTION
品 名 **PCB**

DIMENSIONS
规 格 **FR-1 1.6mm**

MATERIALS
材 质 **CCP-6400/KB-3152**

MODEL NO.
机 型 **4H.4CR02.A11**

CUSTOMER
使 用 **Qisda**

APPROVED
承 认 栏

UL 商品检验合格工厂

ISO9001 合格工厂

广德新三联电子有限公司

Guang De New triunion Electronics Co.Ltd

安徽省广德县经济开发区 PCB 产业园滨河路 1228 号
TEL :0563-2232585
FAX:0563-2232586

TABLE **IA – Parameter Profile Indices**

	Pattern Limits						
	(A)	(B)	(C)				
Type	Minimum Width (mm)	Maximum Area Diameter (mm)	Minimum Edge Width (mm)	Solder Limits Temp. (°C)	Solder Limits Time (Sec.)	Maximum Operating Temp. (°C)	UL 94 Flame Class
TU-3	0.11	25.4	0.33	260	10	130	V-0
TU-7	0.11	25.4	0.33	260	10	130	V-0
TU-9	0.15	25.4	0.45	260	10	105	V-0
TU-11	0.18	25.4	0.45	260	10	130	V-0
TU-12	0.18	25.4	0.45	260	10	130	V-0
TU-13	0.13	25.4	0.39	260	10	130	HB
UN-1	0.10	50.8	0.30	260	10	130	V-0
UN-1A	**0.10**	**50.8**	**0.30**	**260**	**10**	**130**	**V-0**

TABLE IB – Silver Conductor Limitations

Type	Silver Conductor Materials Present (Yes) or (No)	Min. Spacing Between Adjacent Silver Conductors of Opposite Polarity (mm)	Maximum Voltage Withstood Between Silver Conductors (V dc)
TU-3	**NO**	**Not Determined**	**Not Determined**
TU-7	**NO**	**Not Determined**	**Not Determined**
TU-9	**NO**	**Not Determined**	**Not Determined**
TU-11	**NO**	**Not Determined**	**Not Determined**
TU-12	**NO**	**Not Determined**	**Not Determined**
TU-13	**NO**	**Not Determined**	**Not Determined**
UN-1	**NO**	**Not Determined**	**Not Determined**
UN-1A	**NO**	**Not Determined**	**Not Determined**

Note: Reference to silver conductors infers silver conductors and silver plated conductors, for purposes of this report, unless otherwise indicated.

PDF 文件使用 "pdfFactory Pro" 试用版本创建 www.fineprint.cn

TABLE II – BASE MATERIALS

Type	Base Material¢			Minimum Thickness (mm)	Meets UL 746E Direct Support	Minimum Copper Thickness (mics)	CTI (PLC)	SS/DS@	PWB Mfg. Process
	Mfr+	Grade	UL/ ANSI Grade						
TU-3	CC	CCP-3400	FR-1	1.45	Yes	34	-	SS	A
	CC	CCP-6400	FR-1	1.45	Yes	34	-	SS	A
	D	DS-1107, DS-1107S	FR-1	1.45	Yes	34	-	SS	A
	D	DS-1107A	FR-1	1.45	Yes	34	-	SS	A
	H	MCL-437F, MCL-437FB, MCL-437FX, MCL-437-FRX, MCL-437-FPEX	FR-1	1.45	Yes	34	-	SS	A
	KB	**KB-3151C**	**FR-1**	**1.45**	**Yes**	**34**	**-**	**SS**	**A**
*									
	P	R-8700	FR-1	1.45	Yes	34	-	SS	A
	NE	NS-6732	FR-1	1.45	Yes	34	-	SS	A
	NE	NS-6732G	FR-1	1.45	Yes	34	-	SS	A
	S	PLC-2147	FR-1	1.45	Yes	34	-	SS	A
	Y	KH-111F	FR-1	1.45	Yes	34	-	SS	A
	SJ	ZD-90F	FR-1	1.45	Yes	34	-	SS	A
	KB	KB-3152	FR-1	1.45	Yes	34	-	SS	A
TU-7	D	DS-7209	CEM-3	0.63	Yes	17	-	SS	A
	KB	KB-7150	CEM-3	0.63	Yes	17	-	SS	A
	P	R-1781	CEM-3	0.63	Yes	17	-	SS	A
	N	L-6514C1	CEM-3	0.63	Yes	17	-	SS	A
	S	ELC-4951	CEM-3	0.63	Yes	17	-	SS	A
	KB	KB-7150C	CEM-3	0.63	Yes	17	-	SS	A
TU-9	CC	CCP-7400	FR-2	1.45	Yes	34	-	SS	A
	CC	CCP-8400	FR-2	1.45	Yes	34	-	SS	A
	KB	KB-2151	FR-2	1.45	Yes	34	-	SS	A
	NE	NS-6704	FR-2	1.45	Yes	34	-	SS	A
	NE	NS-6704G	FR-2	1.45	Yes	34	-	SS	A

¢ -	Recognized Component - Industrial Laminates (QMTS2)
@ -	SS - Single Sided; DS - Double Sided or Single Sided
+ -	CC: Chang Chun (E108591); D: Doosan (E103670); H: Hitachi (E80148); KB: Kingboard (E123995); P: Panasonic (E81336); N: Nikkan (E46785); NE: Neoplanix (E65931); S: Sumitomo (E95831); Y: Yat Tao (E167840); SJ: Shandong Jinbao (E141940)

PDF 文件使用 "pdfFactory Pro" 试用版本创建 www.fineprint.cn

TABLE II

	Base Material¢				Meets	Minimum			
				Minimum	UL 796	Copper			
			ANSI	Thickness	Direct	Thickness			Mfg
Type	Mfr+	_ _Grade __	Grade	(mm)	Support	(mic)	CTI	SS/DS@	Process
TU-11	D	DS-7405, DS-7405$$	FR-4	1.40	Yes	17	-	SS	B
	KB	KB-6150	FR-4	1.40	Yes	17	-	SS	B
	P	P-121	CEM-1	1.40	Yes	17	-	SS	B
	NE	NS-4700	FR-4	1.40	Yes	17	-	SS	B
TU-12	CC	CCP-508	CEM-1	1.40	Yes	34	-	SS	B
	CC	CCP-518	CEM-1	1.40	Yes	34	-	SS	B
	D	DS-7106	CEM-1	1.40	Yes	34	-	SS	B
	GD	S3110	CEM-1	1.40	Yes	34	-	SS	B
	GD	**S3116**	**CEM-1**	**1.40**	**Yes**	**34**	**-**	**SS**	**B**
	KB	KB-5150	CEM-1	1.40	Yes	34	-	SS	B
	NE	NS-4791	CEM-1	1.40	Yes	34	-	SS	B
	SJ	ZD-95(G)F	CEM-1	1.40	Yes	34	-	SS	B
TU-13	D	DS-1125	XPC	0.71	Yes	34	-	SS	A
	KB	KB-1150	XPC	0.71	Yes	34	-	SS	A
	NE	NS-6711	XPC	0.71	Yes	34	-	SS	A

¢ - Recognized Component - Industrial Laminates (QMTS2)
@ - SS - Single Sided; DS - Double Sided or Single Sided
+ - CC: Chang Chun (E108591); D: Doosan (E103670);
GD: Guangdong Shengyi (E109769);
KB: Kingboard (E123995); P: Pacific (E115974);
NE: Neoplanix (E65931); SJ: Shandong Jinbao (E141940)

PDF 文件使用 "pdfFactory Pro" 试用版本创建 www.fineprint.cn

TABLE II – BASE MATERIALS

	Base Material¢								
Type	Mfr+	Grade	UL/ ANSI Grade	Minimum Thickness (mm)	Meets UL 746E Direct Support	Minimum Copper Thickness (mic)	CTI (PLC)	SS/DS@	PWB Mfg Process
UN-1	D	DS-7405, DS-7405$$	FR-4	0.63	Yes	17	-	DS	C
	G	FR4-97, UV Block FR4-97	FR-4	0.63	Yes	17	-	DS	C
	GS	S1130	FR-4	0.63	Yes	17	-	DS	C
	I	ILM-R1##	FR-4	0.63	Yes	17	-	DS	C
	KB	KB-6160, KB-6164, KB-6167	FR-4	0.63	Yes	17	-	DS	C
	KB	KB-6160A	FR-4	0.63	Yes	17	-	DS	C
	KB	**KB-7150C**	**CEM-3**	**0.63**	**Yes**	**17**	**-**	**DS**	**C**
	P	R-1781, R-1786	CEM-3	0.63	Yes	17	-	DS	C
	P	R-1782, R-1787	CEM-3	0.63	Yes	17	-	DS	C
	N	L-6524C2	CEM-3	0.63	Yes	17	-	DS	C
	NY	FR-4-86, FR-4-TL, UV Block FR-4-86	FR-4	0.63	Yes	17	-	DS	C
	SN	SN-L3, SN-L4	FR-4	0.63	Yes	17	-	DS	C
	ZH	H130, FR4-74	FR-4	0.63	Yes	17	-	DS	C
UN-1A	KB	KB-616(X)	FR-4	0.38	Yes	34	-	SS	D

¢ - Recognized Component - Industrial Laminates (QMTS2)
@ - SS - Single Sided; DS - Double Sided or Single Sided
+ - D: Doosan (E103670); G: Grace (E186152);
GS: Guangdong Shengyi (E109769); I: International Laminate (E134893);
KB: Kingboard (E123995); P: Panasonic (E81336); N: Nikkan (E46785);
NY: Nan Ya (E98983); SN: Shanghai Nanya (E213990);
ZH: Zhejiang Huazheng (E136069)
X - May be 0, 4, 7

PDF 文件使用 "pdfFactory Pro" 试用版本创建 www.fineprint.cn

PCB Material Supplier List

以下是 Display 2007-8-30 的 PCB 素材板合格供应商清单，请 PCB 厂商遵循。如果需导入新的板材厂商，必须在 Qisda 核实并加入这张 PCB Material Supplier List 表格后方可。

PCB Material Type	Supplier/Material
FR-1 (1L)	斗山(DS)
FR-1 (1L)	长春(L)
FR-1 (1L)	长兴(EC)
FR-1 (1L)	建滔 (Kingboard)
FR-4(2L-6L)	南亚(NAYA)
FR-4(2L-6L)	联茂
FR-4(2L-6L)	台光(EMC)
FR-4(2L-6L)	ISOLA
FR-4(2L-6L)	建滔 (Kingboard)
FR-4(2L-6L)	联茂 (ITEQ)
FR-4(2L-6L)	斗山(DS)
CEM-1 (1L)	斗山(DS)
CEM-1 (1L)	长春(L)
CEM-1 (1L)	长兴(EC)
CEM-1 (1L)	建滔 (Kingboard)
CEM-1 (1L)	南亚 (NAYA)

Supplier: _____

HANGZHOU HEQI TRIUNION ELECTRONICS CO.,LTD 杭州和奇三联电子有限公司

Qisda Display Product's PCB General Rule Checklist（单面板）

NO.	Final Surface Finish	Spec.	Checking Area	Vendor Spec.
A-1	Conductor Width/Pad/Spacing Tolerance(Spec.>10mil)	±20%	Conductor/Pad	ok
A-2	Conductor Width/Pad/Spacing Tolerance(Spec.≤10mil)	±15%	Conductor/Pad	ok
A-3	Wing Pad Space Tolerance	<15%	Wing pad Space	ok
A-4	Holes Registration(Minimum annular ring)	≥0.15mm	Hole/Annular ring	ok
A-5	Hole Diameter Tolerance (Tooling)	+0.1mm	Tooling Hole	ok
A-6	Holes Diameter Tolerance(异性孔)	±0.1mm	异性孔	ok
A-7	External Layer Foil	1OZ	Trace /Pad	ok
A-8	Final external conductor thickness	高标≥30um；低标≥27um	Trace /Pad	≥27um
A-9	Cleanliness(离子污染度)	<6.0ug NaCl/Inch^2	PCB before pre-flux	ok
A-10	Adding radius of finished borad 4 corners	RX2mm	Panel's Corners	ok
A-11	Surface finish	松香类(如 Alpha 828#)	Pre-flux	ok
A-12	Hole punch quailty	肉眼检查孔环,没有毛边,不能缺角，不能塌铜，没有毛刺,不能破孔	Punch Hole	ok
A-13	PCB outline dimension tolerance	±0.127mm	PCB 外型尺寸	ok
A-14	焊锡面零件脚位置如有特别标示,如套加黑漆圆圈	Pad上不能有任何油墨残留	Components pad	ok
A-15	线路/pad 印刷偏移	高标：<0.1mm；低标：<0.15mm	Conductor/Pad	<0.15mm
B-1	Solder Mask color	1.Pb free :绿色 2.Halogen free:蓝色	soler mask	ok
B-2	Solder Mask coating thickness	高标：0.46mil；低标：0.15mil	Conductor/Pad	0.15mil
B-3	Solder resist coverage	绿油,文字,标示漆不能沾附焊盘上	Pad/Annular ring	ok
B-4	V-cut thickness Support(FR-1;CEM-1)	0.8±0.1mm（板厚=1.6mm） 0.4±0.08mm（板厚<1.6mm）	V-cut Support	ok
B-5	V-cut Angle	30°±3°	V-cut Angle	ok
B-6	Finish Board thickness tolerance	±10%	PCB Thickness	ok
B-7	客户或本公司Logo Marking	除非Gerber 有明列,否则禁止加入	PCB Marking	ok
B-8	The Other Marking	1.需Marking Date Code 2.需Marking PCB 耐燃等级 3.需Marking PCB 制造厂 Brand/Logo 4.需Marking 本公司PCB 料号 5.需Marking UL 安规标记及其号码 6.需Marking UL Type designation标记	PCB Marking	ok
C-1	Conductive Patterns(Definition/Dimensional)	参照IPC-A-600G Class-II检验规范	Conductor/Trace	ok
C-2	Conductive /traces/pads/lands/ground/voltage planes	参照IPC-A-600G Class-II检验规范	Conductor/Pad	ok
C-3	solder mask surface	参照IPC-A-600G Class-II检验规范	PCB Surface	ok
C-4	Marking/Legend	参照IPC-A-600G Class-II检验规范	PCB	ok
D-1	final finish board open test	≤50 Ω	PCB	ok
	final finish board short test	高标：>10MΩ;低标：>5MΩ	PCB	>5MΩ

Prepare By: 魏国民　　Approve By:

Qisda Display Product's PCB General Rule Checklist（单面板）

NO	Item	Test Method	Spec.	Test Freq.	Sampling Size	Vendor Test result
E-1	S/M Adhesion	IPC-TM-650 2.4.28.1	No Peel Off,No Flaking			ok
E-2	Bow And Twist	IPC-TM-650 2.4.22	Twist:<0.5%;Bow:<0.5%			ok
E-3	Thermal Stress (Float Solder)	260±2℃ x 10sec.-->Room temp.x10min.-->x2 Cycles	No blistering,no mealing	1.FAI		ok
E-4	Outline dimension	Follow Gerber		2.Per Mfg		ok
E-5	Solderablility	Wave soldering(245±3℃ x2.0±0.2sec.)	Wetting 100%	LOT	2PCS/LOT	ok
E-6	Insulation Resistance	JIS-6418C 5.11 (D-2/100,500VDC±10% x60sec.	>1x10^{8}Ω(FR-1) >5X10^{10}Ω(CEM-1)	Per CCL lot	1PCS/LOT	ok
F-1	Peel Strength Copper Foil 35um	JIS-6418C S-260℃/10sec	>1.4Kgf/cm^{9}（FR-1) >1.5kgf/cm^{9}(CEM-1)			ok
F-2	Rework simulation	IPC-TM-650	No land lifting			ok
	Surface Resistivity 蚀刻面		>5x10^{9}Ω(FR-1); >1X10^{11}Ω(CEM-1)			ok
F-3	Surface Resistivity 基板面	JIS-6418C (c-96/40/90)	>1X10^{8}Ω(FR-1); >8X10^{10}Ω(CEM-1)			ok
F-4	Hot Oil test	265℃x10sec-->20℃x30sec-->x100Cycles	No blistering,no mealing			ok
F-5	Ionic contamination	IPC-TM-650 2.3.25 test liquid 45MΩ X 15min.	<6.0ug NaCl/inch^{2} (Before pre-flux)			ok
F-6	Thermal Shock	IPC-TM-650 2.6.7.2-65℃x30min-->125℃x30min--> (> 500 cycles)每一阶段温度变化须2分钟内完成	1.Resistance change <10% 2.No blistering,No mealing,	1.FAI		ok
F-7	CTI (耐漏电绝缘性)	IEC-112	≥基板spec.CTI值	2.1次/半年	每个料号抽2pcs	ok

Test By: 鲍国民　　Approve By: [illegible]

PCB List		
ModelNO.		
Part NO.	4H.4CR02.A11	
PCB Spec	PCB size(mm)	298*247
	PCB pcs/panel	4/1
	Thickness	1.60+/-10%
	Outline Tolerance(mm)	+/-0.127
	SLOT Tolerance(mm)	+0.1/-0
	PCB hole tolerance(mm)	+0.1/-0
	V-cut 残厚(mm)	0.8+/-0.1
Raw Material	Grade	FR-1
	Maker	台湾长春/昆山建滔
	CCL Name	CCP-6400/KB-3152
	Copper thickness	35um
	UL Symbol	E148279 94V-0 TU-3
	Flammability UL Grade	94V-0
Finish PCB	PCB Type	Layer1
	Copper thickness	1OZ
Conductor	Min.Width	依据Gerber
	Min Gap	依据Gerber
Soler Mask	Maker	互應江守油墨有限公司
	Type number	PSR-310HB(HB-9)
	Thickness	0.15mil
	color	Blue
Symbol	Maker	江苏广信感光新材料股份有限公司
	Type number	KSM-150W
	Thickness	10-20um
	Color	WHITE
Surface finish treatment	Type	松香
	Thickness	NA
破溝與相鄰Trace之距離	≧ 0.5 mm	NA
PTH 孔銅厚度	Min. > 0.8 mil , Avg. ≧ 0.9 mi	NA
Multi Min. Trace 寬度, 間距	寬度≧4mil ,間距≧ 4mil	NA
BGA & Non BGA via	所有Via Hole需两面塞绿漆，不得假性漏铜(BGA 处严格执行)，不能具有焊锡性（除非Gerber特别定义）	NA
Via塞孔填充量(绿漆,树脂)	> 60% (BGA 处严格执行)	NA
Others	Version Number	A

Prepare By：扶曼　　Confirm With：柯正婷

PCB SA Checklist

Rev: 0 (09/01/2007)

Item	Spec		Vendor Check	Qisda Check
Model & Board Name	/			
P/N	4H.4CR02.A11		OK	
PCB pcs/panel	4 Pcs / 1 Panel		OK	
PCB Dimension	298x 247 mm ± 0.127 mm(± 0.1mm)		OK	
UL Mark & UL No.	E148279 94V-0 TU-3		OK	
Open/Short Test	Open test : ≦ 50Ω , Short test : > 10MΩ		OK	
Micro Etching (微蝕刻)	填入微蝕液之藥水 Type		OK	
Pre-Flux	多層板填 OSP 藥水型號，單層板填 Pre-Flux 型號		OK	
OSP Thickness	0.25 um-0.4 um		NA	
Internal Layer 銅箔厚度	> 0.98 mil		NA	
External Layer 銅箔厚度	> 1.4 mil		OK	
PTH 孔銅厚度	Min. > 0.8 mil , Avg. ≧ 0.9 mil		NA	
正背文字標記	須可辨認, P/N 須正確. 文字不得覆蓋於Pad上		OK	
焊點偏，孔偏	孔外緣與pad外緣之寬度>0.2mm(Gerber中的環寬不可以通過補償達到0.45mm的，孔外緣與pad外緣之寬度>0.1mm);(如果CNC 样品，请厂商提供全检数据)		OK	
Trace, Pad間之綠漆	不得脫落		OK	
Conductor Width/Spacing/ pad Tolerance	Spec. > 10mil ;誤差不得超過標準寬度之15%		OK	
	Spec. ≤10mil ;誤差不得超過標準寬度之20 %, (有阻抗要求的15%)		OK	
Impedance Control	Characteristic impedance ± 8 % Differential impedance ± 10 %		NA	
板厚 Tolerance	±9%		OK	
板彎 Twist	板彎<长边* 0.60% ;但<1.6mm		OK	
板翹 Bow	板翹 < PCB/Panel 对角线长 *0.60%; 但<1.6mm		OK	
Trace 刮傷	NO		OK	
Single 最小Trace 寬度 ,間	寬度≧ 0.3 mm ,間距≧0.4mm		OK	
Mulit 最小Trace 寬度, 間距	寬度≧4mil ,間距≧4mil		OK	
破溝與相鄰Trace之距離	≧ 0.5 mm		OK	
Eyelet 與 Pad品質	不得有氧化現象		OK	
孔徑Tolerance	开模品	+ 0.1 /-0 mm	NA	
	PTH	±3mil (For线材孔采用+3mil)	NA	
	Uplanted	±2mil	NA	
防焊油墨厚度	0.46mil(min.>0.15mil at the edge of trace)		OK	
BGA & Non BGA via	所有Via Hole需兩面塞綠漆，不得假性漏銅，不能具有焊錫性（除非Gerber特別定義）		OK	
V-CUT （上下刀深度一致，偏移≦0.1mm）	FR-1(板厚1.6mm)	Support SPEC.:0.8±0.1mm	OK	
	CEM-1(板厚 1.6mm)	Support SPEC.:0.8±0.1mm	NA	
	FR-4(板厚1.6mm)	Support SPEC.:1/3板厚±0.08mm	NA	
	板厚<1.6mm	Support SPEC.:0.4±0.08mm	NA	
	Angle SPEC	30° ±3°	OK	
Hole punch quality	銅孔環不得有毛邊/毛刺/破孔/缺角/翹銅/凸起現象		OK	
成品板4個角落須導圓角	R x 2mm		OK	
Ionic contamination	<6.0ugNaCl/inch² (Test liquid>45MΩ, 100° F,x15Min)		OK	

PCB Material List

Supplier / Material	UL File No.	UL Flame Class	UL 耐燃溫度	基板 Tg 溫度
台湾长春/CCP-6400SM	E108591	94V-0	NA	NA

簽名 : 扶曼

广德新三联电子有限公司

Guangde New Triunion electronics Co.,Ltd.

样品检测报告表

PART NO(料号): 4H.4CR02.A11 **SPECIFICATION(规格) 298mm X 247mm**

MANUFACTURING(制造者): 小样组 **FOR MODEL NO(适用机种):**

INSPECTIONITEM 检查项目	SPEC&REQUIRED 规格要求	DATA 实测值					判定		USED TOOLS 使用工具
							REJ	ACC	
线路	无短路、断路、毛刺、缺口、残铜	OK		OK		OK		✓	Open/Short 测试仪
堵孔	无	OK		OK		OK		✓	目视
表面	无铜箔氧化 表面涂覆均匀	OK		OK		OK		✓	目视
	无污染、划伤	OK		OK		OK		✓	目视
印刷	正确	OK		OK		OK		✓	目视
孔径、孔位	正确、焊环偏离中心不大于0。2MM	OK		OK		OK		✓	目视、仪器
结合力试验	阻焊层不起泡、阻焊层、字符不脱落	OK		OK		OK		✓	仪器
铅笔硬度测试	≥3H	OK		OK		OK		✓	铅笔
可焊性	240℃、2 秒浸润	OK		OK		OK		✓	可焊仪
材质	KB-3152	OK		OK		OK		✓	仪器
材料厚度	1.6±0.16mm	1.64		1.62		1.63		✓	千分卡
外形尺寸	298*247 ±0.127mm	297.94*246.92		297.96*246.94				✓	X-Y 读数仪
		297.98*246.94		297.96*246.98					
通断测试		OK	OK	OK	OK	OK		✓	Open/Short 测试仪

第 1 组

结构尺寸	5.00±0.1	4.98	5.02	5.04	4.96	5.02	5.06	4.98	5.04		✓	X-Y 读数仪
异形孔尺寸	0.60*2.7 +0.1/-0	0.625*2.70		0.625*2.70		0.625*2.70		0.625*2.70			✓	X-Y 读数仪
		0.625*2.70		0.625*2.70		0.625*2.70		0.625*2.70				
	0.70*1.2 +0.1/-0	0.725*1.24		0.725*1.24		0.725*1.24		0.725*1.24				
		0.725*1.24		0.725*1.24		0.725*1.24		0.725*1.24				
	0.70*3.0 +0.1/-0	0.775*3.01		0.775*3.01		0.775*3.01		0.775*3.01				
		0.775*3.01		0.775*3.01		0.775*3.01		0.775*3.01				
	1.20*3.6 +0.1/-0	1.275*3.62		1.275*3.62		1.275*3.62		1.275*3.62				
		1.275*3.62		1.275*3.62		1.275*3.62		1.275*3.62				
	1.30*2.0 +0.1/-0	1.350*2.04		1.350*2.04		1.350*2.04		1.350*2.04				
		1.350*2.04		1.350*2.04		1.350*2.04		1.350*2.04				
小块尺寸	121*149 ± 0.127mm	121.02*149.02		121.04*148.98		121.06*149.04		121.06*149.02			✓	卡尺
		121.06*149.06		120.96*149.02		121.04*148.96		121.02*148.98			✓	
孔径	0.70+0.1/-0	0.750	0.750	0.750	0.750	0.750	0.750	0.750	0.750		✓	孔规
	0.90+0.1/-0	0.975	0.975	0.975	0.975	0.975	0.975	0.975	0.975		✓	
	1.00+0.1/-0	1.025	1.025	1.025	1.025	1.025	1.025	1.025	1.025			
	1.10+0.1/-0	1.150	1.150	1.150	1.150	1.150	1.150	1.150	1.150			
	1.20+0.1/-0	1.250	1.250	1.250	1.250	1.250	1.250	1.250	1.250			
	0.80+0.1/-0	0.875	0.875	0.875	0.875	0.875	0.875	0.875	0.875			
	1.50+0.1/-0	1.525	1.525	1.525	1.525	1.525	1.525	1.525	1.525			
	1.60+0.1/-0	1.650	1.650	1.650	1.650	1.650	1.650	1.650	1.650			
	2.00+0.1/-0	2.025	2.025	2.025	2.025	2.025	2.025	2.025	2.025			
	2.80+0.1/-0	2.825	2.825	2.825	2.825	2.825	2.825	2.825	2.825			
	3.00+0.1/-0	3.025	3.025	3.025	3.025	3.025	3.025	3.025	3.025			
	4.50+0.1/-0	4.500	4.500	4.500	4.500	4.500	4.500	4.500	4.500			
	3.50+0.1/-0	3.525	3.525	3.525	3.525	3.525	3.525	3.525	3.525			
	4.20+0.1/-0	4.225	4.225	4.225	4.225	4.225	4.225	4.225	4.225			
	3.20+0.1/-0	3.225	3.225	3.225	3.225	3.225	3.225	3.225	3.225			
	4.00+0.1/-0	4.000	4.000	4.000	4.000	4.000	4.000	4.000	4.000			
板弯	<1.6mm	0.35	0.42	0.44	0.38	0.30	0.42	0.40	0.35		✓	塞规
板翘	<1.6mm	0.38	0.40	0.42	0.36	0.35	0.40	0.34	0.40		✓	塞规
V-CUT	0.8±0.1mm	0.76	0.82	0.78	0.82	0.78	0.76	0.84	0.82		✓	百分表

第 2 组

结构尺寸	5.00±0.1	4.98	5.02	5.04	4.96	5.02	5.06	4.98	5.04		✓	X-Y 读数仪
异形孔尺寸	0.60*2.7 +0.1/-0	0.625*2.70		0.625*2.70		0.625*2.70		0.625*2.70			✓	X-Y 读数仪
		0.625*2.70		0.625*2.70		0.625*2.70		0.625*2.70				
	0.70*1.2 +0.1/-0	0.725*1.24		0.725*1.24		0.725*1.24		0.725*1.24				
		0.725*1.24		0.725*1.24		0.725*1.24		0.725*1.24				
	0.70*3.0 +0.1/-0	0.775*3.01		0.775*3.01		0.775*3.01		0.775*3.01				
		0.775*3.01		0.775*3.01		0.775*3.01		0.775*3.01				
	1.20*3.6 +0.1/-0	1.275*3.62		1.275*3.62		1.275*3.62		1.275*3.62				
		1.275*3.62		1.275*3.62		1.275*3.62		1.275*3.62				
	1.30*2.0 +0.1/-0	1.350*2.04		1.350*2.04		1.350*2.04		1.350*2.04				
		1.350*2.04		1.350*2.04		1.350*2.04		1.350*2.04				
小块尺寸	121*149 ± 0.127mm	121.02*149.02		121.04*148.98		121.06*149.04		121.06*149.02			✓	卡尺
		121.06*149.06		120.96*149.02		121.04*148.96		121.02*148.98			✓	
孔径	0.70+0.1/-0	0.750	0.750	0.750	0.750	0.750	0.750	0.750	0.750		✓	孔规
	0.90+0.1/-0	0.975	0.975	0.975	0.975	0.975	0.975	0.975	0.975		✓	
	1.00+0.1/-0	1.025	1.025	1.025	1.025	1.025	1.025	1.025	1.025			
	1.10+0.1/-0	1.150	1.150	1.150	1.150	1.150	1.150	1.150	1.150			
	1.20+0.1/-0	1.250	1.250	1.250	1.250	1.250	1.250	1.250	1.250			
	0.80+0.1/-0	0.875	0.875	0.875	0.875	0.875	0.875	0.875	0.875			
	1.50+0.1/-0	1.525	1.525	1.525	1.525	1.525	1.525	1.525	1.525			
	1.60+0.1/-0	1.650	1.650	1.650	1.650	1.650	1.650	1.650	1.650			
	2.00+0.1/-0	2.025	2.025	2.025	2.025	2.025	2.025	2.025	2.025			
	2.80+0.1/-0	2.825	2.825	2.825	2.825	2.825	2.825	2.825	2.825			
	3.00+0.1/-0	3.025	3.025	3.025	3.025	3.025	3.025	3.025	3.025			
	4.50+0.1/-0	4.500	4.500	4.500	4.500	4.500	4.500	4.500	4.500			
	3.50+0.1/-0	3.525	3.525	3.525	3.525	3.525	3.525	3.525	3.525			
	4.20+0.1/-0	4.225	4.225	4.225	4.225	4.225	4.225	4.225	4.225			
	3.20+0.1/-0	3.225	3.225	3.225	3.225	3.225	3.225	3.225	3.225			
	4.00+0.1/-0	4.000	4.000	4.000	4.000	4.000	4.000	4.000	4.000			
板弯	<1.6mm	0.35	0.42	0.44	0.38	0.30	0.42	0.40	0.35		✓	塞规
板翘	<1.6mm	0.38	0.40	0.42	0.36	0.35	0.40	0.34	0.40		✓	塞规
V-CUT	0.8±0.1mm	0.76	0.82	0.78	0.82	0.78	0.76	0.84	0.82		✓	百分表

第 3 组

结构尺寸	5.00±0.1	4.98	5.02	5.04	4.96	5.02	5.06	4.98	5.04		✓	X-Y 读数仪
异形孔尺寸	0.60*2.7 +0.1/-0	0.625*2.70		0.625*2.70		0.625*2.70		0.625*2.70			✓	X-Y 读数仪
		0.625*2.70		0.625*2.70		0.625*2.70		0.625*2.70				
	0.70*1.2 +0.1/-0	0.725*1.24		0.725*1.24		0.725*1.24		0.725*1.24				
		0.725*1.24		0.725*1.24		0.725*1.24		0.725*1.24				
	0.70*3.0 +0.1/-0	0.775*3.01		0.775*3.01		0.775*3.01		0.775*3.01				
		0.775*3.01		0.775*3.01		0.775*3.01		0.775*3.01				
	1.20*3.6 +0.1/-0	1.275*3.62		1.275*3.62		1.275*3.62		1.275*3.62				
		1.275*3.62		1.275*3.62		1.275*3.62		1.275*3.62				
	1.30*2.0 +0.1/-0	1.350*2.04		1.350*2.04		1.350*2.04		1.350*2.04				
		1.350*2.04		1.350*2.04		1.350*2.04		1.350*2.04				
小块尺寸	121*149 ± 0.127mm	121.02*149.02		121.04*148.98		121.06*149.04		121.06*149.02			✓	卡尺
		121.06*149.06		120.96*149.02		121.04*148.96		121.02*148.98			✓	
孔径	0.70+0.1/-0	0.750	0.750	0.750	0.750	0.750	0.750	0.750	0.750		✓	孔规
	0.90+0.1/-0	0.975	0.975	0.975	0.975	0.975	0.975	0.975	0.975		✓	
	1.00+0.1/-0	1.025	1.025	1.025	1.025	1.025	1.025	1.025	1.025			
	1.10+0.1/-0	1.150	1.150	1.150	1.150	1.150	1.150	1.150	1.150			
	1.20+0.1/-0	1.250	1.250	1.250	1.250	1.250	1.250	1.250	1.250			
	0.80+0.1/-0	0.875	0.875	0.875	0.875	0.875	0.875	0.875	0.875			
	1.50+0.1/-0	1.525	1.525	1.525	1.525	1.525	1.525	1.525	1.525			
	1.60+0.1/-0	1.650	1.650	1.650	1.650	1.650	1.650	1.650	1.650			
	2.00+0.1/-0	2.025	2.025	2.025	2.025	2.025	2.025	2.025	2.025			
	2.80+0.1/-0	2.825	2.825	2.825	2.825	2.825	2.825	2.825	2.825			
	3.00+0.1/-0	3.025	3.025	3.025	3.025	3.025	3.025	3.025	3.025			
	4.50+0.1/-0	4.500	4.500	4.500	4.500	4.500	4.500	4.500	4.500			
	3.50+0.1/-0	3.525	3.525	3.525	3.525	3.525	3.525	3.525	3.525			
	4.20+0.1/-0	4.225	4.225	4.225	4.225	4.225	4.225	4.225	4.225			
	3.20+0.1/-0	3.225	3.225	3.225	3.225	3.225	3.225	3.225	3.225			
	4.00+0.1/-0	4.000	4.000	4.000	4.000	4.000	4.000	4.000	4.000			
板弯	<1.6mm	0.35	0.42	0.44	0.38	0.30	0.42	0.40	0.35		✓	塞规
板翘	<1.6mm	0.38	0.40	0.42	0.36	0.35	0.40	0.34	0.40		✓	塞规
V-CUT	0.8±0.1mm	0.76	0.82	0.78	0.82	0.78	0.76	0.84	0.82		✓	百分表

APPROVED(核准): 柯正婷 CHECK BY(检验): 扶曼

Qisda

Supplier Survey Form

Subject: Material Storage temperature and humidity , Shelf-life, ESD sensitive Survey Ver 1.0

Part Information			Storage Condition in supplier's Original Packing				Storage Condition after Open Original packing (For Vacuum packing, this is open vacuum packing)				ESD Sensitive	
Part Description	Supplier P/N	QisdaP/N	Storage Temperature	Storage Humidity	Storage Shelf Life	Handling Method if out of control	Storage Temperature	Storage Humidity	Storage Shelf Life	Handling Method if out of control	No	ESD Sensitive Level
FR-1	**Y01094476N A1**	**4H.4CR02.A11**	**0~40℃**	**30~90%**	**六个月**	回生产线上重新进行后处理 重新包装	**常温**	**30~80%**	**2-4 天**	回生产线上重新进行后处理 重新包装		

Remark: 1: "Storage Temperature / Humidity" means supplier recommend Temperature and humidity range in BenQ's W/H.

2: " Storage Shelf life" means Supplier recommended Storage Shelf life time in BenQ's W/H from BenQ receiving parts or from parts manufacturing date.

3: "Handling Method if out of control " Means Supplier recommended how to handle parts if storage temperature/humidity/Shelf life condition out of control.

4: "Open Original packing " means part is under condition that it can be touched. For vacuum packing IC, means open vacuum packing. For plastic bag , means open bag.

5: ESD sensitive level means parts 's Anti ESD SPEC is under which model, how much voltage and according to which standard.

Part Packing Specification

Part Description:

Supplier P/N: **Y01094476NA1** QisdaP/N: **4H.4CR02.A11** Vender: New triunion

1: Part Packing method and SPEC:

用塑封包装，每包 25 PANEL

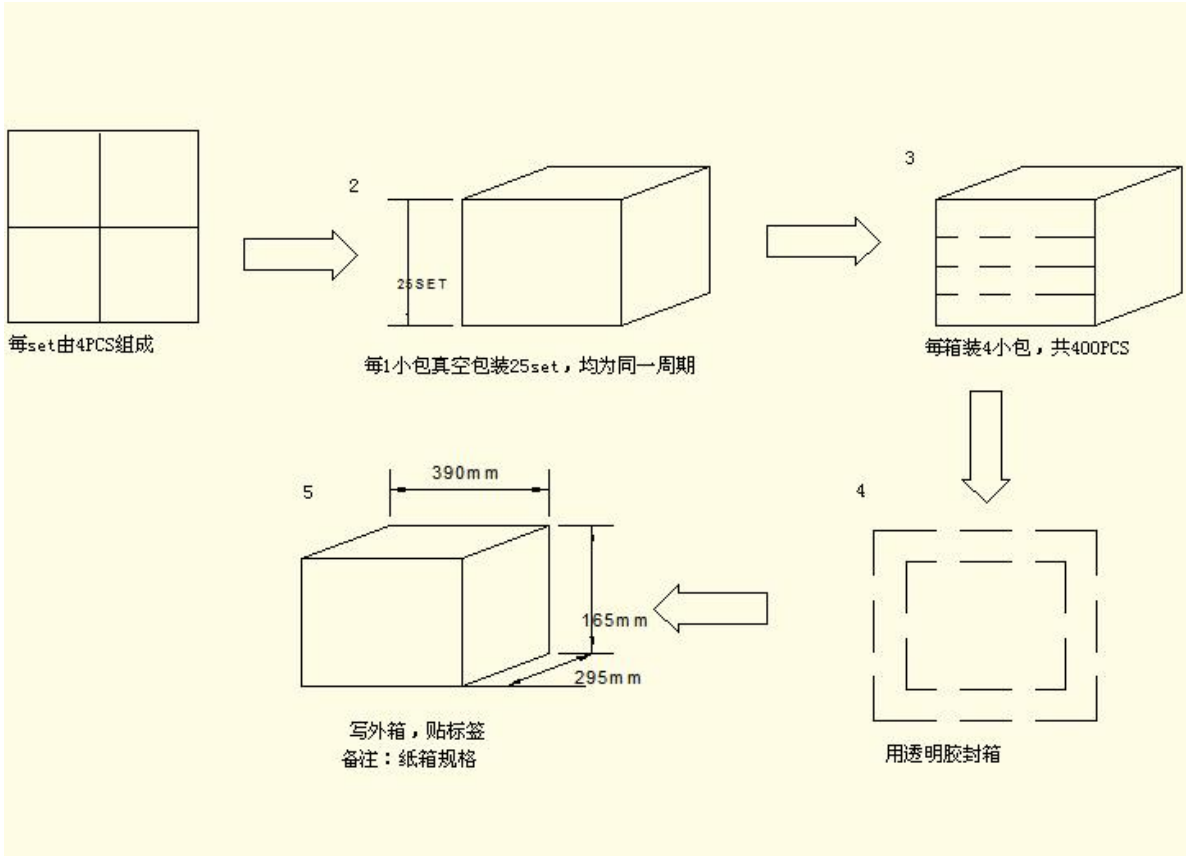

制单：扶曼 2023.02.24

TCO'03 Environment Data Sheet (LCD/CRT)

Component/Parts Name: PCB

Model No/Part No: 4H.4CR02.A11

Item	Parts/Components to be Applied?	Criteria	Actual value	Result (Pass/fail)	Remark
A.6.2.1 Cadmium (Cd) and mercury (Hg)	batteries, paint, lacquer, connectors, solder, plastic materials (including PCB oard laminates & AC Adapter)	Hg: < 2 ppm Cd: < 5 ppm	Hg: N.D Cd: N.D	PASS	
A.6.2.2 Lead (Pb)	batteries, paint, lacquer, external cables isolations, plastic materials (including PCB & AC adapters)	Pb: < 50 ppm	N.D	PASS	
A.6.2.3 Brominated and chlorinated flame retarding agents	Plastic material >25g	Br & Cl Flame retardant < 0.5%	N.D	PASS	
A.6.2.4 Information regarding flame retarding agents	Plastic material >25g	Br & Cl Flame retardant < 0.5%	Attachment 1	PASS	**Include PCB, Adapter**
A.6.2.5 Brominated and chlorinated plastics	Plastic material >25g	No Br or Cl	N.D	PASS	**Include PCB, Adapter**
A.6.3.1 Material coding of plastics	Plastic material >25g	Coded accordance to: ISO 11469, ISO 1043-1, -2, -3, -4	/	/	**Include PCB, Adapter**
A.6.3.2 Design for recycling - Mercury lamps	LCD Panel	(1) Easy to take apart (2) Total amount of Hg	1). Attachment 2 2). Attachment 3	/	LCD Monitor
A.6.3.4 Metallization of plastic housing	Plastic Housing, Cover(s)	No internal or external metallization or moulded-in or glued metal parts	/	/	

We hereby guarantee that the above mandate is fulfilled

盛传龙

Signature

Name and title in block capitals

March 24, 2023

Date

广德新三联电子有限公司

Company

Attachment 1:
Plastic Material List

PWB name	Weight in grams	Type of plastic	Plastic manufacturer name	Plastic model name	Flame retardant/ plasticizer type	Flame retardant/plasticizer CAS number	Plastic label code
4H.4CR 02.A11	41.22g	Paper	changchuen	CCP-6400	溴化环氧树脂	188-88-3	L
	41.22g	Pape	Jiantao	KB-3152	TBBA	79-94-7	KB

Note: This form apply to **PCB, Adapter** & **LCD Panel**

Attachment 2
LCD Back-light Information

Mercury lamp supplier	Lamp ID code	Average mg Hg/lamp	Max. mg Hg/lamp	Min. mg Hg/lamp

LCD identification code	LCD manufacturing company

Attachment 3
Means of LCD Mercury Lamp Disassembly

Please attach Mercury Lamp Disassemble means.

We hereby guarantee that the above information is correct

盛传龙

Signature

Name and title in block capitals

March 24, 2023

Date

广德新三联电子有限公司

Company