REV.	DATE	DESCRIPTION	BY	APVD

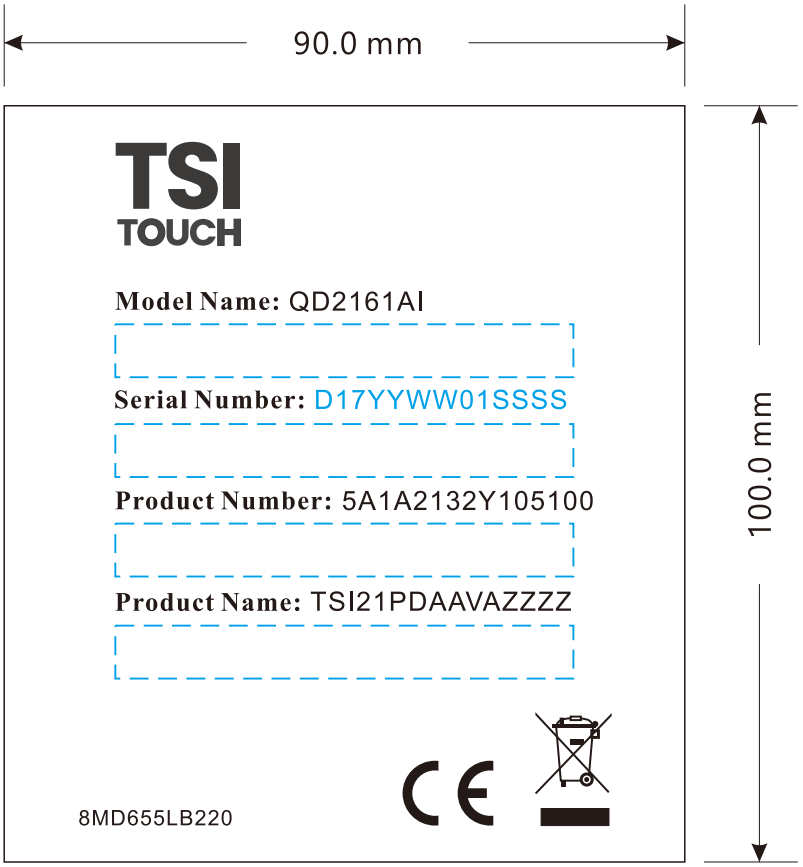

Note:
1.Use 3MDL4XLB440 Blank label.
2.Use Ricoh #B110A ribbon.

PM / SALES	THIRD ANGLE PROJECTION	UNITS: mm	SCALE: 1/1	SHEET: 1/1	MODEL NO.: TSI21PDAAVAZZZZ	
		MATERIAL: SEE NOTES		TREATMENT: SEE NOTES		
PE / PCD	DSGD by: Lyn	2025/07/28	PART NAME: CARTON LABEL			
	APVD by:		PART NO.: 8MD655LB220		VER.0	
	APVD NO.:	FILE NAME: TSI21PDAAVAZZZZ.cdr	DIVA Laboratories,Ltd.			