REV.	ECN NO.	CONTENT	DATE	ENGINEER
A0		Initial release	/	TSP

技术指标:

1、塑件表面应光洁、无毛刺、明显收缩、缺陷、裂纹等现象;
2、温度范围：-25° C~+85° C;
3、额定电压：150V，AC，DC(等效);
4、接触电阻：≤0.02Ω;
5、绝缘电阻：≥100MΩ;
6、耐压：500V，AC/minute.

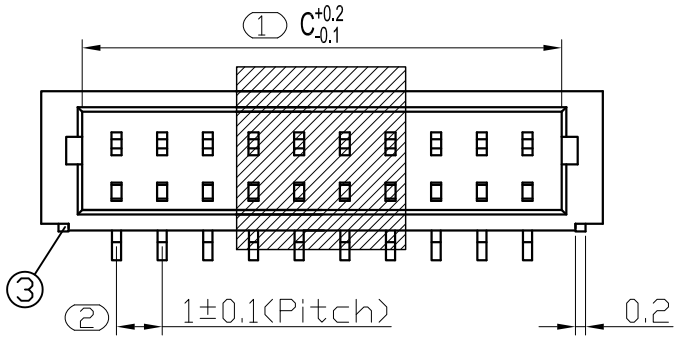

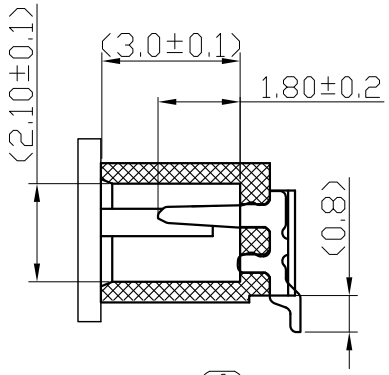

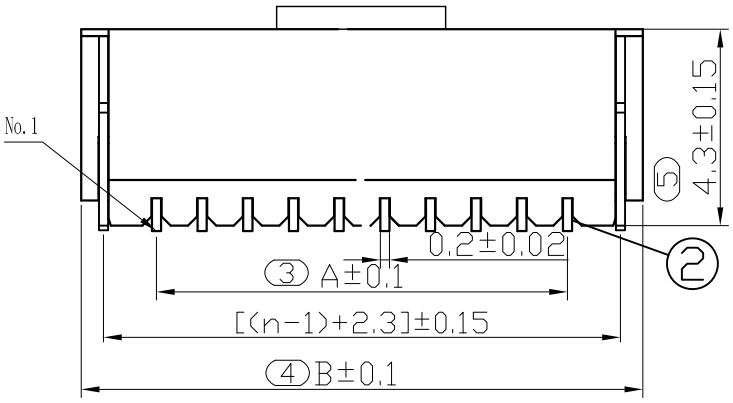

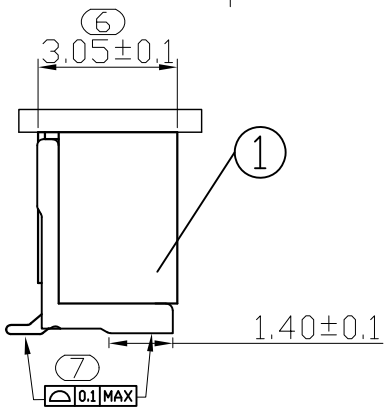

孔位 poles	A	B	C
2	1	4.3	2.4
3	2	5.3	3.4
4	3	6.3	4.4
5	4	7.3	5.4
6	5	8.3	6.4
7	6	9.3	7.4
8	7	10.3	8.4
9	8	11.3	9.4
10	9	12.3	10.4
11	10	13.3	11.4
12	11	14.3	12.4
13	12	15.3	13.4
14	13	16.3	14.4
15	14	17.3	15.4
16	15	18.3	16.4
17	16	19.3	17.4
18	17	20.3	18.4
19	18	21.3	19.4
20	19	22.3	20.4

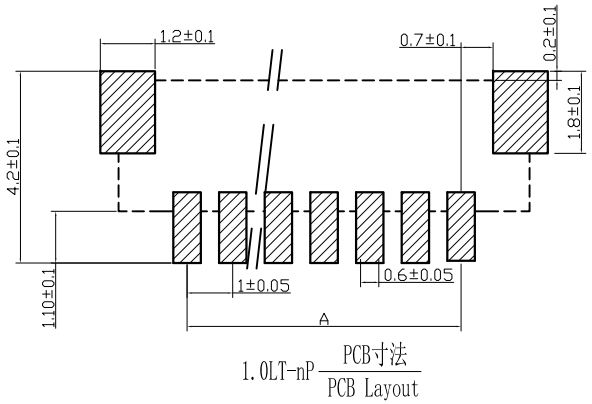

1.0LT-nP PCB寸法 / PCB Layout

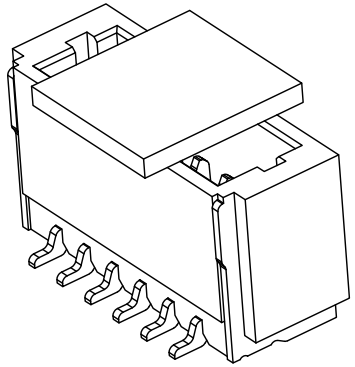

序号	名 称	材 料	数 量	附 注
3	焊片 Fitting Nail	磷青铜 Phosphor Bronze	2	电镀(锡)：整个表面镀底镍30u"MIN,再镀锡 80u"MIN.
2	端子 Contact	磷青铜 Phosphor Bronze	n*1	电镀(锡)：整个表面镀底镍30u"MIN,再镀锡 80u"MIN.
1	基座 Wafer	LCP(UL94V-0)	1	本色

TECHNIK INDUSTRIAL CO.LTD.

.X: ±0.38 X°: ±3°	NAME: 针座 1.0-10P 立贴 加盖 米黄色
.XX: ±0.25 .X°: ±2°	
.XXX: ±0.13 .XX°: ±1°	
APPD. JM_Zheng	PJ. NO.: WT.10.61-85-M005
CHKD. LYX	SIZE: A4 DRW NO.:
DR. TSP	FINISH: SEE NOTES MAT'L.: SEE NOTES
	SCALE: N/A REV.: A0 UNIT: mm PAGE: 1/1

REV.	ECN NO.	CONTENT	DATE	ENGINEER
A0				

PULL OUT DIRECTION
出 料 方 向

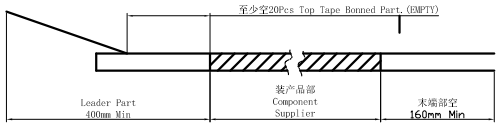

载带带头及带尾尺寸
Lead tape length

PULL OUT DIRECTION
出 料 方 向

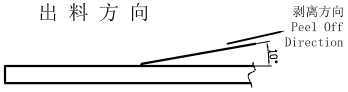

载带上下带剥离强度：0.1N--1.3N(10g-130g)
Peeling off force of top tape:
0.1N--1.3N(10g-130g)

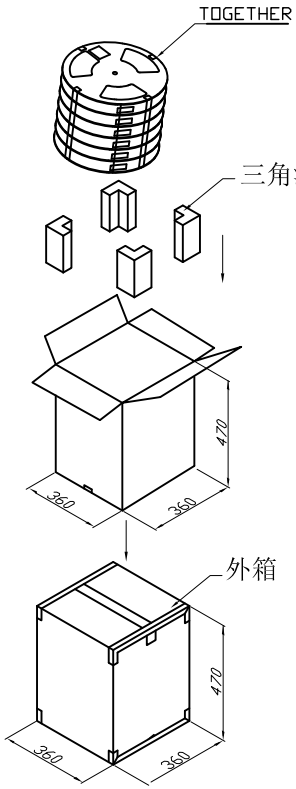

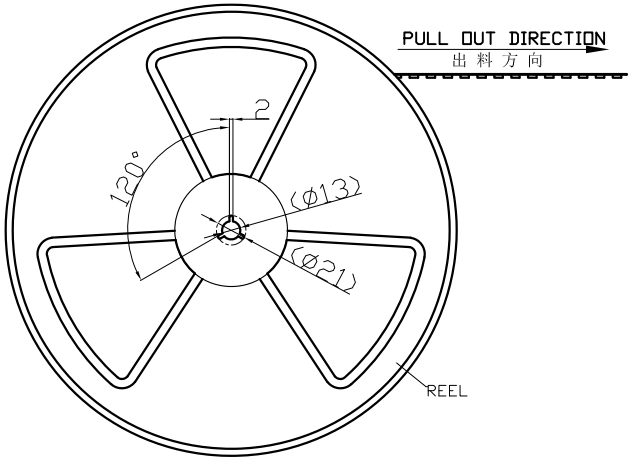

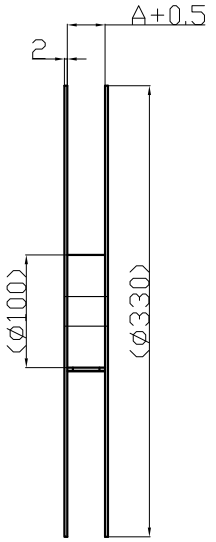

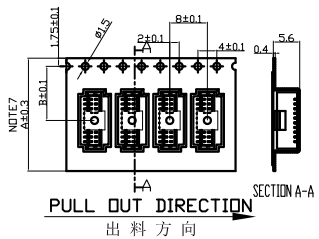

宽度:16mm/24mm 载带

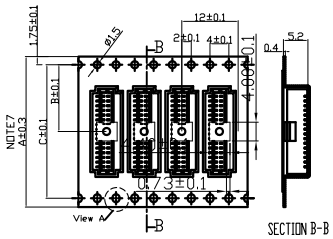

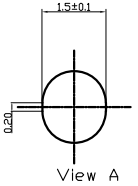

Note:
1. Sprocket holes pitch cumulative tolerance ±0.1.(Accumulative Pitch ±0.2)
2. Carrier camber is within 1mm in 100mm.
3. All dimensions meet EIA-481-D requirements.
4. Thick ness:0.4±0.1mm.
5. Material of top fape:PET,PE,PEF
6. Material of carrier fape:Poystyrene
7. For tape width (dimension A) 16mm and 24mm a pilot hole is provided on one side. For tape width (dimension A)32mm and 44mm pilot holes are provided on both sides.

芯 数 Pin (n)	尺 寸 Size A	B	C
2-6	16.0	7.5	----
7-14	24.0	11.5	----
15-16	32.0	14.2	28.4

1.0WT-nP						
REEL WIDTH	16	24	32			
PCS/REEL	1500					
CTN. SIZE	360*360*470					

TECHNIK INDUSTRIAL CO.LTD.

.X: ±0.38 X°: ±3°
.XX: ±0.25 .X': ±2'
.XXX: ±0.13 .XX": ±1"

NAME: 针座 1.0-10P 立贴 加盖 米黄色

APPD.	JM_Zheng
CHKD.	LYX
DR.	TSP

PJ. NO.: WT.10.61-85-M005
SIZE: A4 | DRW NO.:
FINISH: SEE NOTES | MAT'L.: SEE NOTES
SCALE: N/A | REV.: A0 | UNIT: mm | PAGE: 1/1