# 承　认　书

SPECIFICATION FOR APPROVAL

客　　户：佳 士 达
CUSTOMER

品　　名：AC SOCKET
DESCRIPTION

客户料号：2B.90014.081
BUYER P/N.

DLK 料号：ACT3KD-03BT3B026HPF
DLK P/N

客户承认意见栏 CUSTOMER APPROVED BY


深圳市德力康电子科技有限公司
SHENZHEN DLK ELECTRONICS TECHNOLOGY CO., LTD.
地址：深圳市西丽镇大磡村王京坑 92 号
TEL：0755-88841180　FAX：0755-26994489

昆山德力康电子科技有限公司
KUNSHAN DLK ELECTRONICS TECHNOLOGY CO.,LTD
地址：昆山市淀山湖镇黄浦江南路 278 号
TEL：0512-57498666　FAX：0512-57498555


| 核准 | | 审核 | | 制作 | 丁 沁 | 日期 | 2019 年 02 月 22 日 |
|---|---|---|---|---|---|---|---|

# 目　录

## Directory

1. 封面

Cover

2. 目录

Directory

3. 履历表

Resume

4. 图面

Drawings

5. 材质清单

Material list

6. UL 黄卡

UL Card

7. 规格书

Specification

8. 安规证书

Safety certificate

9. 环境管理物质不使用证书

Environmental management material don't use certificate

# COMPONENT SPEC VERSION RECORD

| CUSTOMER PART NO. | 2B.90014.081 | DLK PART NO. | ACT3KD-03BT3B026HPF |
|---|---|---|---|

| VER | MINUTE OF CHANGES | DLK CHECK | RELEASE DATE |
|---|---|---|---|
| A | CHECKED AND RELEASED | 丁 沁 | 2019-02-25 |
| | | | |
| | | | |
| | | | |
| | | | |
| | | | |
| | | | |
| | | | |
| | | | |
| | | | |
| | | | |
| | | | |
| | | | |
| | | | |
| | | | |
| | | | |
| | | | |
| | | | |

符合"DLK环境管理物质技术标准"

| 工程变更通知单 ECN(DCN) NO. | 版本 REV | 日期 DATE | 说明 DESCRIPTION | 改变 CHANGE | 承认 APPRO. |
|---|---|---|---|---|---|
| ———— | X0 | 20181011 | NEW | —— | —— |
| ———— | X1 | 20181214 | 1. 依客户要求修改马口铁耳朵形状<br>2. 孔4.50mm尺寸改为5.00mm | 王永辉 | |

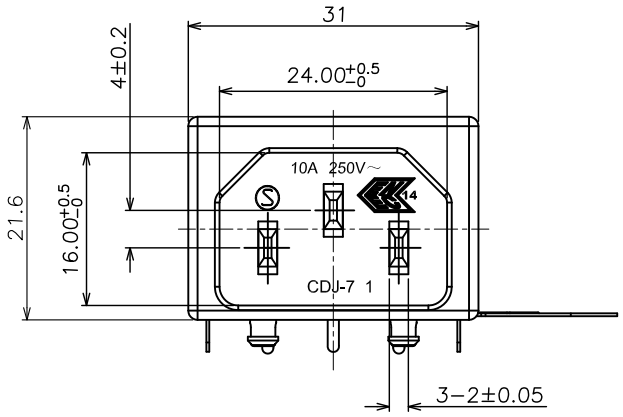


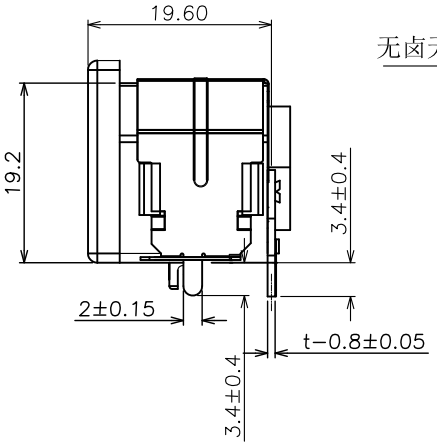


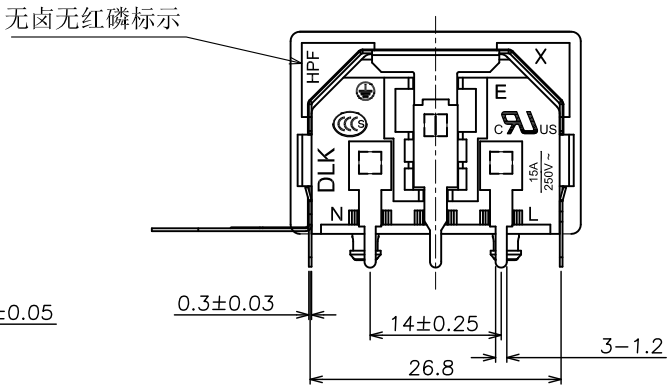


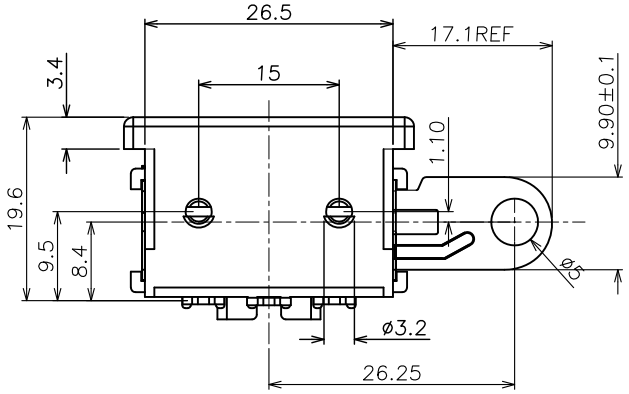


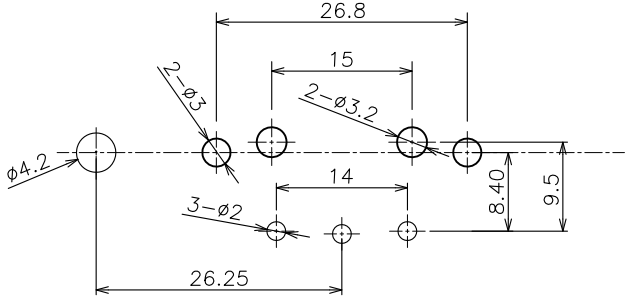


PCB LAYOUT

料号说明：

ACT3K D-03 B T3 B 026HPF
① ② ③ ④ ⑤ ⑥

① PRODUTION CODE（产品编码）:
ACT3K: AC SOCKET SERIES
② CHARACTER（特征）:
STRAIGHT ANGLE TYPE
③ POSITION（位数）:
03: 3 PIN
④ COLOR OF HOUSING(本体颜色):
B:BLACK COLOUR
⑤ PLATING OF CONTACT(端子电镀):
T3: Tin PLATD
⑥ PACKAGE(包装）:
B : BOX PACKAGE

| NO. | ITEM | Q'TY | DESCRIPTION | FINISH |
|---|---|---|---|---|
| 4 | Soldering Pin | 1 | Tinplate | Tin |
| 3 | Soldering Pin | 3 | Brass | Tin |
| 2 | Contact Pin | 3 | Brass | Nickel |
| 1 | Housing | 1 | PA66 UL 94-V0 | Black |

| GENERAL TOLERANCE UNLESS OTHERWISE NOTED | |
|---|---|
| Angle | ±5° |
| X. | ±0.50 |
| .X | ±0.35 |
| .XX | ±0.25 |
| .XXX | ±0.15 |
| A4 | |

德力康电子科技有限公司
DELIKANG ELECTRONICS TECHNOLOGY CO.,LTD

| | | | | | |
|---|---|---|---|---|---|
| C | 名称 TITLE: | AC 90D 19H 侧带接地导电片铁壳 | | | |
| 档案名称 FILE NAME: | C-ACT3K-00-26HPF | | 料号 PART NO: | ACT3KD-03BT3B026HPF | |
| DRAWING | 张志兵 | CHECKED | | APPROVED | |
| UNIT: | mm | SCALE | 1:1 | SHEET: | 1 of 1 |

# Material BOM List

料件名稱/料號 : ACT3KD-03BT3B026HPF

廠商名稱 : DLK

版本 Version :A

Customer P/N :2B.90014.081

日期 Date : 2019.02.25

依循國際標準或是協會標準:IEC 60320

| 項目 ITEM | 部位 Position description | 廠商名稱 supplier | 底材材質 Bottom material | FLAME , UL NO | 顏色,色碼 Color , Number | 底材主要組成 Component of Bottom material | 第一層材質 Material of first layer | 鍍層濃度範圍 Plating layer thickness | 第二層材質 Material of Second layer | 鍍層濃度範圍 Plating layer thickness |
|---|---|---|---|---|---|---|---|---|---|---|
| 1 | Housing | TS/DLK | PA66 | UL:E321019 UL94V-0 | BLACK | | | | | |
| 2 | Contact Pin | GT/TQ/DLK | C2800(H62) | | | Cu | Ni | 100u"Min | | |
| 3 | Soldering Pin | GT/TQ/DLK | C2800(H62) | | | Cu | Ni | 50u"Min | Tin | 100u"Min |
| 4 | Soldering Pin | HW/DLK | SPTE | | | Fe | Tin | 26u"Min | | |
| | | | | | | | | | | |
| | | | | | | | | | | |
| | | | | | | | | | | |

Note = Paint thickness unit : u"

Approve:严成旺　　Check:N/A　　Prepare:丁沁

**Component - Plastics** [guide info] **E321019**

## TAISU PLASTIFICATION MATERIAL SCI&TECH CO LTD

TAISU INDUSTRIAL ZONE, FENGXIN RD, GUANGMING NEW DISTRICT, SHENZHEN GUANGDONG 518107 CN

# PA66 T303 (XX)GF BK-D(f1)

Polyamide 66 (PA66), furnished as pellets, particles

| Color | Min Thk (mm) | Flame Class | HWI | HAI | RTI Elec | RTI Imp | RTI Str |
|---|---|---|---|---|---|---|---|
| BK | 0.8 | V-0 | 2 | 1 | 120 | 110 | 125 |
| | 3.0 | V-0 | 0 | 0 | 120 | 110 | 125 |

Comparative Tracking Index (CTI): 0

Inclined Plane Tracking (IPT): -

Dielectric Strength (kV/mm): 26

Volume Resistivity ($10^X$ ohm-cm): 13

High-Voltage Arc Tracking Rate (HVTR): -

High Volt, Low Current Arc Resis (D495): -

Dimensional Stability (%): -

(XX) - Denotes a two digit number 01 thru 34 representing 01% to 34% glass fiber reinforcement.

(f1) - Suitable for outdoor use with respect to exposure to Ultraviolet Light, Water Exposure and Immersion in accordance with UL 746C.

ANSI/UL 94 small-scale test data does not pertain to building materials, furnishings and related contents. ANSI/UL 94 small-scale test data is intended solely for determining the flammability of plastic materials used in the components and parts of end-product devices and appliances, where the acceptability of the combination is determined by UL.

Report Date: 2012-08-21

Last Revised: 2014-03-06

© 2015 UL LLC

**IEC and ISO Test Methods**

| Test Name | Test Method | Units | Thk (mm) | Value |
|---|---|---|---|---|
| Flammability | IEC 60695-11-10 | Class (color) | 0.8 | V-0 (BK) |
| | | | 3.0 | V-0 (BK) |
| Glow-Wire Flammability (GWFI) | IEC 60695-2-12 | C | 3.0 | 960 |
| Glow-Wire Ignition (GWIT) | IEC 60695-2-13 | C | 3.0 | 775 |
| IEC Comparative Tracking Index | IEC 60112 | Volts (Max) | - | - |
| IEC Ball Pressure | IEC 60695-10-2 | C | - | - |
| ISO Heat Deflection (1.80 MPa) | ISO 75-2 | C | - | - |
| ISO Tensile Strength | ISO 527-2 | MPa | - | - |
| ISO Flexural Strength | ISO 178 | MPa | - | - |
| ISO Tensile Impact | ISO 8256 | $kJ/m^2$ | - | - |
| ISO Izod Impact | ISO 180 | $kJ/m^2$ | - | - |
| ISO Charpy Impact | ISO 179-2 | $kJ/m^2$ | - | - |

# AC SOCKET 测试项目管控表

| Item | 测试项目 | 测试项目 | 备注 |
|---|---|---|---|
| 1 | 接触电阻 | ≤30m Ω | |
| 2 | 绝缘电阻 | ≥100MΩ | |
| 3 | 耐电压 | Pin-Pin: 2.0KV AC 1min<br>Pin-Base : 4.0KV AC 1min | |
| 4 | 尺寸 | 符合规格要求 | |
| 5 | 外观 | 无变形，无破损，无污秽，无氧化 | |
| 6 | MARKING | 符合规格要求 | |
| 7 | 插拔力 | 符合规格要求 | |
| 8 | Terminal strength | 符合规格要求 | |
| 9 | 可焊性 | Temperature≤235±5℃<br>Dip Time≤2.5±0.5sec<br>Requirement:90%COVERAGE 以上 | |
| 10 | 耐焊接性 | Temperature：260+2/-0℃<br>Dip Time≥10±0.5sec<br>Requirement:符合 RoHS 零件耐焊接热标 | |
| | | | |
| | | | |
| ORT 测试 | | | 附出货检验报告 |
| 11 | Salt Spray Test | Temperature:35 Density:5%,48hr | |
| 12 | Durability(耐插拔) | Life cycles based on SPEC | |
| 13 | PIN 电镀厚度 | 符合规格要求 | |
| | | | |
| | | | |
| | | | |
| | | | |
| | | | |
| | | | |
| | | | |

# 1.电气规格

## 1.1 料件工作温度范围

料件使用温度范围：**0**℃～**85**℃.

## 1.2 料件最高工作温度

料件最高使温度： **85**℃.

## 1.3 料件存储温度范围

料件存储温度范围：**-20**℃～**100**℃.

## 1.4 料件存储期限

料件存储期限：**6** 个月（自产品出厂之日起存储期限为 **6** 个月）.

## 1.5 料件工作电气极限要求

额定电流：**15A 250V AC**

接触阻抗：**30m Ω** 以下.

绝缘阻抗：**100M Ω** 以上 **500V DC.**

耐电压：接触销间加电压 **2000V AC/1** 分钟以上，感度电流 **1 mA,**不可有绝缘破裂.

机械寿命： **5,000CYCLES.**

# Specification

## 1. General(一般事项)

1.1 Application: This specification is applied to the inlet socket used in electronic equipment.
使用范围：本规格书主要用于一般电子设备之插座.

1.2 Operation Temperature Range. 使用温度范围：0℃～85℃

1.3 Storage Temperature Range. 保存温度范围：-20℃～100℃

1.4 RH 相对湿度:45～85%

1.5 Atmospheric pressure 气压：860～1060Mbr.

## 2.Appearance Construction and Dimensions (外观、构造、尺寸)

2.1 Aappearance: Inlet socket shall have good finishing,and shall have no rust,crack or plating failure.
外观：各部分之加工徐良好，机能上下不能生锈、刮伤、裂痕、电镀不良及剥离等现象发生.

2.2 Cleeansing condition:inlet socke′ s surface shall avoid contact with oil sludge and shall not be exposed to the air for a long tiom.
清洁条件：避免插座表面与空气长时间接触及油渍沾污.

2.3 Construction and dimension:as per product drawing.
构造及尺寸：依组立图.

## 3.Electruction performance(电气性能)

| Item 项目 | | Test conditions 测试条件 | Standards 判定标准 |
|---|---|---|---|
| 3.1 | Contact Resistance 接触电阻 | To be measured with 5vdc,1a 1 min (100 mA or less)<br>以电压 5V DC 1 分钟, 电流 100mA(最大)状态下测试. | 30mΩ MAX.<br>30 毫欧以下. |
| 3.2 | Insulation Resistance 绝缘电阻 | To be measured with an insulation resistance device of 500VDC between all theerminals and between the terminals and the frame for 1minute±5se tconds<br>以 500V DC 电压加于接触销相互间 1 分钟±5 秒测定之. | More tnan 100MΩ.<br>100 兆欧以上. |
| 3.3 | Dielecttic Withstand Strength Test 耐电压 | Apply a viltage to seconds(50～60Hz) as follows:<br>如下列测定条件:<br>1.2000VAC/1minute between each pins;<br>2.4000VAC/1minute between pins and the base;<br>1.输入 AC 2000V 电压 1 分钟以上,在所有端子间.<br>2.输入 AC 4000V 电压 1 分钟以上,在端子与本体间. | No breaking insulation.<br>Induced current:1mA<br>不可有绝缘破坏等异常.<br>漏电电流:1mA |

## 4.Mechanical performance (机械性能规格)

| Item 项目 | | Test conditions 测试条件 | Standards 判定标准 |
|---|---|---|---|
| 4.1 | Inserting Force 插入力度 | Measurement shall be made after connecting and Disconnecting using standard plug gauge 3 times.<br>依据标准的 PLUG GAUGE 做 3 次拔插后测定. | 6kgf MAX.<br>最大 6kgf. |
| | Extracting Force 拔出力度 | Measurement shall be made after connecting and Disconnecting using standard plug gauge 3 times.<br>依据标准的 PLUG GAUGE 做 3 次插拔后测定. | Between 1～5kgf.<br>1～5kgf 之间. |
| 4.2 | Rivet force (betweenterminal and pin) 铆合拉力(端子与接触销) | A static load of 10kgf shall be applied to the between terminal and pin riveted of reverse for 1minute.<br>沿端子与接触销之铆合之反方向施于静负荷力 10kgf/1 分钟 | The terminal may be deformed but shall not sustain any problem as breacking of terminal.<br>端子不可有脱落和破裂现象，但可容许弯曲. |
| 4.3 | Rivet force (between pin and base) 铆合拉力(接触销与底座) | A static load of 8kgf shall be applied to the between pin and base riveted of reverse for 1minute.<br>沿端子与接触销之铆合之反方向施于静负荷力 8kgf/1 分钟 | The terminal may be deformed but shall not sustain any problem as breacking of terminal.<br>端子不可有脱落和破裂现象，但可容许弯曲. |

# Specification

<table>
<tr><td>4.4</td><td>Shearing force<br>剪力测试</td><td>A static of 10kgf shall be applied to tip of the pin of perpendicular for 1 minute.<br>沿接触销之垂直方向末端施于静负荷力 10kgf/1 分钟</td><td>Electrical characteristics shall be satisfied,there shall be no distinct looseness or deformation in mechanical system.<br>满足电气性能，机械性能方面，没有明显的松动和变形.</td></tr>
<tr><td>4.5</td><td>Ultrasonic weld force<br>超音波熔接强度</td><td>A static load of 3kgf shall be applied in reverse of welding of cover for 1 minute.<br>沿熔接相反方向施于静负荷力 3kgf/1 分钟.</td><td>Thecover shall not sustain ang problem as breaking.<br>盖板务脱落现象.</td></tr>
<tr><td>4.6</td><td>Soldering heatresistance<br>耐锡热</td><td>Temperature and duration of dipping 焊锡温度和侵入时间：
<table>
<tr><th>Terminal of lead<br>导线端子</th><th>Temperature<br>温度</th><th>Time<br>时间</th></tr>
<tr><td>Manual soldering<br>手焊式</td><td>350±10℃</td><td>4-5sec</td></tr>
<tr><td>Dip soldering<br>锡炉式</td><td>260+2/-0℃</td><td>10±0.5sec</td></tr>
</table></td><td>No abnormalities shall be observed in appearance and operation. The electrical performance of the above item 3 shall be assured.<br>外观无明显变形及动作无异常，且满足第三项电气性能.</td></tr>
<tr><td>4.7</td><td>Solderabi-Lity Test<br>可焊性试验</td><td>The top of the terminals shall be dipped 2mm<br>In the solder bath of 235±5℃ for 2.5±0.5seconds.<br>端子顶部被浸入锡焊池中(≧焊线区域深),温度控制在 235±5℃,过炉时间为 2.5±0.5 秒.</td><td>The area of soldering.<br>should be over 90%.<br>着焊锡面积要有 90%以上.</td></tr>
<tr><td>4.8</td><td>Vibration (sinusoidal)<br>震动测试(正弦曲线)</td><td>Where not otherwise specified,semiconductor devices are to conform with condition A,and other parts with condition B.
<table>
<tr><th>Condition</th><th>A</th><th>B</th></tr>
<tr><td>Kind of vibration</td><td colspan="2">Frequency Modulation</td></tr>
<tr><td>Amplitude or frequency</td><td>200m/s²(20G)</td><td>1.5mm Constant</td></tr>
<tr><td>Ratio of sweep</td><td>100～2000～100Hz<br>about 4 min.</td><td>10～55～10Hz<br>about 4 min.</td></tr>
<tr><td>Time</td><td>X,Y,Z Directions<br>Each once 48 min</td><td>X,Y,Z Directions<br>Each Once 2 hr.</td></tr>
</table></td><td></td></tr>
<tr><td>4.9</td><td>Shock<br>冲击测试</td><td>Maximum acceleration:1000m/s² (100G)<br>Pulse width:6msec<br>Shape of shock wave:semi-sine wave<br>Shock frequency:continuously 3 times for each of 6 facets<br>(total 18 times)</td><td></td></tr>
<tr><td>4.10</td><td>Terminal strength<br>端子保持力</td><td>A static load of 5kgf be applied to pins for 1 minute.<br>施予端子 5kgf 的力 1 分钟</td><td>Terminal not remove<br>端子不可移动</td></tr>
</table>

# Specification

| | | | |
|---|---|---|---|
| 4.11 | Durability<br>**耐插拔** | Without load:connection and disconnection shall be made with the mating plugs and jacks for 5,000 cycles at a speed of 20 cycles/min.<br>**无负荷:用标准 plug(尽量要近于中心的)在 1 分钟内以 20 次的速度,进行 5,000 次插入、拔出.** | Pin not bend or broken;<br>The electrical performance of the above item 3 shall be assured.<br>接触销无明显变形，损坏;<br>**满足第三项电气性能.** |
| 5.weather proof (耐候性) | | | |
| Item 项目 | | Test conditions 测试条件 | Standards 判定标准 |
| 5.1 | Dry proof<br>耐热性 | The ac socket shall be stored at a temperature of 80±2℃ for 96 hours.and then it shall be subjected to the controlled recovery conditions for 1 hour after which measurement shall be made.<br>放置在温度 80±2℃中 96 小时后,再置于正常室温中 1 小时来测定. | 1.Clause 4.1 shall be satisfied.<br>2.Contact resistance:30mΩ.<br>3.Deformation or cracks shall not be recognized in molded part.<br>1.必须满足 4.1 项;<br>2.接触阻抗:30mΩ以下;<br>3.塑胶部分不能变形或破裂. |
| 5.2 | Cold proof<br>耐寒性 | The specimen shall be stored at a temperature of -20±2℃ for 96h.and then the specimen shall be subjected to the controlled recovery conditions for 1h,after which measurement shall be made.<br>The measurement shall be made within 1 hr after the recovrey period.<br>在温度-20±2℃放置 96 小时试验后,置于常温常湿中 1 小时内测定之. | 1.Clause 4.1 shall be satisfied.<br>2.Contact resistance:30mΩ.<br>3.Deformation or cracks shall not be recognized in molded part.<br>1.必须满足 4.1 项;<br>2.接触阻抗:30mΩ以下;<br>3.塑胶部分不能变形或破裂. |
| 5.3 | Damp heat<br>(steady state)<br>耐湿性<br>(稳定状态) | Put in the environment of temperature 38-42℃& relate humidity 90～95%rh 120 hours, then moved to normal environment 1hour for test.<br>放置在温度 38-42℃,相对湿度 90～95%RH 的环境中 120 小时后,再将样版放在正常环境 1 小时后进行测试. (IEC60065) | 1.Clause 4.1 shall be satisfied.<br>2.Contact resistance:30mΩ.<br>3.Deformation or cracks shall not be recognized in molded part.<br>1.必须满足 4.1 项;<br>2.接触阻抗:30mΩ以下;<br>3.塑胶部分不能变形或破裂. |
| 5.4 | Terminal Strength<br>端子强度 | Apply 5N gravity in the direction of the terminal of axis X, Y,Z for 10 seconds,After soldering and fixing the PC board Properly, insert and withdraw 100 cycles, But the inscrtion Force is 15N max.<br>在端子各方向加 5N 的重力，X,Y,Z 方向，负荷 10 秒，焊接并固定印刷线路板后，插拔力 100 次，但插力在 15N 以下。 | There are no crack, no damage Electrical performance, Normal<br>**端子上无裂纹，损伤等，电阻性能正常** |
| 5.5 | Salt mist<br>盐雾测试 | 1.Temperature:35±2℃<br>2.Salt water:5% weight to concentration ratio<br>3.Time：48hrs<br>1.温度：35±2℃<br>2.盐水：5%的浓度比例<br>3.时间：48 小时（连续喷雾，端子于接触销不可生锈,镀锡件 24 小时） | After-test kept in the room temperature for 1 hour, than measured it within 1 hour after rid of grime and emit water.<br>No abnormalities shall be observed on the appearance and construction.<br>实验后置于室温 1 小时，然后出去污渍与水滴再于 1 小时内测定之.<br>**外观无异常现象;** |
| | | 膜厚類型 / 測試時間 / 判定 | |
| | | **AC SOCKET** | |
| | | 镀锡部件 / 24H | 無氧化,銹蝕 |
| | | 镀锡之焊锡部件 / 24H | |
| | | 金属件與非金屬/折彎處/切口 / 24H | |
| | | 外部連接 port / 48H | |
| | | 接觸端鍍金(包含 15u"與 15u"以上) / 48H | |
| | | 接觸端鍍金(包含 15u"以下上) / 48H | |

# Specification

| | | | |
|---|---|---|---|
| 5.6 | Damp heat cyclic<br>温湿度循环 | 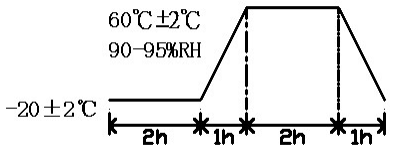<br>Test cycles:40 cycles<br>循环试验：40个循环<br>Time of 1 cycles:6hrs<br>1个循环时间：6小时<br>Kept in the room temperature for 1 hour, then measured it within 1 hour afer emit water.<br>**置于常温 1 小时再除去水蒸气并于 1 小时内测定之.** | 1.Max contact resistance:30mΩ.<br>2.Min insulation resistance:100MΩ.<br>3.Abnormalities shall be observed on the appearance and construction.<br>1.接触阻抗:30mΩ以下;<br>2.绝缘电阻：100MΩ;<br>**3.外观构造无异常现象.** |
| 5.6 | Temperature cycling test<br>循环温度测试 | Testing in the conditions as follows for 8cycles, after-test kept in the room temperature for 1 hour, than measured it within 1 hour after rid of grime and water.<br>置于恒温恒湿机中:<br>温度：如图 Temperature: as chart 湿度：85%以下 Humidity:85%RH Max<br>时间：48H Test Time:48H<br>如下图连续循环 8 次，试验后置于室温中 1 小时，然后出去污渍与水滴再于 1 小时内测定之（6hr/Cycle）.<br>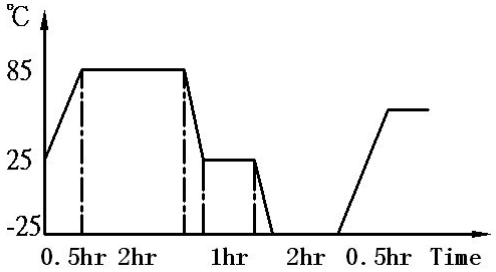 | 1.Clause 4.1 shall be satisfied.<br>2.Contact reisitance:30 MAX.<br>3.Deformation or cracks shall on be recognized in plastic.<br>4.No abnormalities shall be observed on the appearance and construction.<br>1.必须满足 4.1 项<br>2.接触阻抗：30 mΩ以下<br>3.塑胶部份不能变形或破裂.<br>4.外观构造无异常现象. |
| 5.7 | Digesting Test<br>蒸煮试验 | The AC socket shall be stored at vapor a temperature of 100±2℃ for 1 hours, and then it shall be subjected to The controlled recovery conditions for 2 hour after which Measurement shall be made in the solder bath for 3±0.5 seconds.<br>放置在温度 100±2℃的水蒸气中 1 小时后，再置于正常室温中 2 小时后，进行可焊性测定. | The area of soldering ,should be Over 90%,Surface of soldered terminal are niformity,gloss, the tin layer Covering the full.<br>着焊锡面积要有 90%以上，端子焊锡表面均匀，表面光泽，层覆盖完整. |
| * The abave are which are in accordance with international specification. | | | |
| 备注： | | | |

# 中国国家强制性产品认证证书

证书编号：2012010204589110

委托人名称、地址

昆山德力康电子科技有限公司

淀山湖镇民营区

生产者（制造商）名称、地址

昆山德力康电子科技有限公司

淀山湖镇民营区

生产企业名称、地址

昆山德力康电子科技有限公司

江苏省昆山市淀山湖镇民营区(黄浦江南路 278 号)

产品名称和系列、规格、型号

用于冷条件下 I 类设备的 10A 250V 器具输入插座

CDJ-7 10A 250V～、CDJ-7 1 10A 250V～

产品标准和技术要求

GB/T17465.1-2009

上述产品符合强制性产品认证实施规则 CNCA-C02-01:2014 的要求，特发此证。

发证日期：2018 年 08 月 08 日　　有效期至：2023 年 08 月 08 日

证书有效期内本证书的有效性依据发证机构的定期监督获得保持。

本证书为变更证书，证书首次颁发日期：2013 年 01 月 09 日

本证书的相关信息可通过国家认监委网站 www.cnca.gov.cn 查询

主　任：

中国质量认证中心



Q 2008916

# CERTIFICATE FOR CHINA COMPULSORY PRODUCT CERTIFICATION

**CERTIFICATE NO.: 2012010204589110**

**NAME AND ADDRESS OF THE APPLICANT**

KUNSHAN DLK ELECTRONICS TECHNOLOGY CO., LTD.

Minying District, Dianshanhu Town

**NAME AND ADDRESS OF THE MANUFACTURER**

KUNSHAN DLK ELECTRONICS TECHNOLOGY CO., LTD.

Minying District, Dianshanhu Town

**NAME AND ADDRESS OF THE FACTORY**

KUNSHAN DLK ELECTRONICS TECHNOLOGY CO., LTD.

(No.278 South Huangpujiang Road)Private Economic Zone, Dianshan lake, Kunshan City, Jiangsu Province

**PRODUCT NAME, MODEL AND SPECIFICATION**

10A 250V Appliance Inlet for Class Ⅰ Equipment for Cold Conditions

CDJ-7 10A 250V～、CDJ-7 1 10A 250V～

**THE STANDARDS AND TECHNICAL REQUIREMENTS FOR THE PRODUCTS**

GB/T17465.1-2009

**This is to certify that the above mentioned product(s) complies with the requirements of implementation rules for compulsory certification(REFNO.CNCA-C02-01:2014).**

**Valid from:** Aug.08,2018 **Valid until:** Aug.08,2023

**The validity of the certificate is subject to positive result of the regular follow up inspection by issuing certification body until the expiry date.**

Date of original issued: Jan.09,2013

The certificate information is available through CNCA's website: www.cnca.gov.cn

President:

Wang Kejiao

CHINA QUALITY CERTIFICATION CENTRE 中国质量认证中心

**CHINA QUALITY CERTIFICATION CENTRE**

http://www.cqc.com.cn Section 9, No. 188, Nansihuan Xilu, Beijing 100070 P. R. China Tel: +86 10 83886666

Q 2008916

Ref. Certif. No.

**SE-91104**

# IEC SYSTEM FOR MUTUAL RECOGNITION OF TEST CERTIFICATES FOR ELECTRICAL EQUIPMENT (IECEE) CB SCHEME

## CB TEST CERTIFICATE

| | |
|---|---|
| Product | Appliance inlet |
| Name and address of the applicant | Kunshan DLK Electronics Technology Co.Ltd.<br>No. 278, Huangpujiang South Road, Dianshanhu Town, Kunshan<br>Jiangsu, 215345, P. R. China |
| Name and address of the manufacturer | Same as applicant |
| Name and address of the factory<br>Note: *When more than one factory, please report on page 2* | Same as applicant |
| Ratings and principal characteristics | 10A, 250V~ |
| Trademark (if any) | DLK |
| Customer's Testing Facility (CTF) Stage used | - |
| Model / Type Ref. | CDJ-7, CDJ-7 1 |
| Additional information (if necessary may also be reported on page 2) | - |
| A sample of the product was tested and found to be in conformity with | IEC 60320-1:2015 |
| As shown in the Test Report Ref. No. which forms part of this Certificate | 180509037GZU-001 |

This CB Test Certificate is issued by the National Certification Body

**Intertek Semko AB**
**Box 1103**
**SE-164 22 Kista, Sweden**
**Int +46 8 750 00 00**

Date: 18 June 2018

intertek

Signature:

Bo Berglöf

# CERTIFICATE OF COMPLIANCE

| | |
|---|---|
| **Certificate Number** | 20180629-E317189 |
| **Report Reference** | E317189-20180628 |
| **Issue Date** | 2018-JUNE-29 |

**Issued to:** KUNSHAN DLK ELECTRONICS TECHNOLOGY CO LTD
278 Huangpujiang South Rd
Dianshanhu Town
Kunshan,
Jiangsu 215345 CHINA

**This is to certify that representative samples of** COMPONENT - ATTACHMENT PLUGS, FUSELESS
SEE ADDENDUM PAGE

Have been investigated by UL in accordance with the Standard(s) indicated on this Certificate.

**Standard(s) for Safety:** SEE ADDENDUM PAGE

**Additional Information:** See the UL Online Certifications Directory at www.ul.com/database for additional information

Only those products bearing the UL Certification Mark should be considered as being covered by UL's Certification and Follow-Up Service.

The UL Recognized Component Mark generally consists of the manufacturer's identification and catalog number, model number or other product designation as specified under "Marking" for the particular Recognition as published in the appropriate UL Directory. As a supplementary means of identifying products that have been produced under UL's Component Recognition Program, UL's Recognized Component Mark: ᴿᵁᴸ, may be used in conjunction with the required Recognized Marks. The Recognized Component Mark is required when specified in the UL Directory preceding the recognitions or under "Markings" for the individual recognitions.

Recognized components are incomplete in certain constructional features or restricted in performance capabilities and are intended for use as components of complete equipment submitted for investigation rather than for direct separate installation in the field. The final acceptance of the component is dependent upon its installation and use in complete equipment submitted to UL LLC.

Look for the UL Certification Mark on the product.

Bruce Mahrenholz, Director North American Certification Program

UL LLC

Any information and documentation involving UL Mark services are provided on behalf of UL LLC (UL) or any authorized licensee of UL. For questions, please contact a local UL Customer Service Representative at http://ul.com/aboutul/locations/



Created by UL Document Assembler 2018-08-02 03:00:47 -05:00

# CERTIFICATE OF COMPLIANCE

| | |
|---|---|
| **Certificate Number** | 20180629-E317189 |
| **Report Reference** | E317189-20180628 |
| **Issue Date** | 2018-JUNE-29 |

This is to certify that representative samples of the product as specified on this certificate were tested according to the current UL requirements.

Component – Appliance inlet, Model: CDJ-7 1.

STANDARDS

UL 60320-1 Appliance Couplers For Household And Similar General Purposes – Part 1: General Requirements
CSA C22.2 No. 60320-1-11 Standard for Appliance Couplers For Household And Similar General Purposes – Part 1: General Requirements

Bruce Mahrenholz, Director North American Certification Program

UL LLC

Any information and documentation involving UL Mark services are provided on behalf of UL LLC (UL) or any authorized licensee of UL. For questions, please contact a local UL Customer Service Representative at http://ul.com/aboutul/locations/



Created by UL Document Assembler 2018-08-02 03:00:47 -05:00

Intertek

# Certificate

for European Product Safety

*Reference No. 1812069*

## Appliance inlet

| | |
|---|---|
| *Type designation* | CDJ-7, CDJ-7 1 |
| *Certificate holder* | **Kunshan DLK Electronics Technology Co.Ltd.**<br>**No. 278, Huangpujiang South Road, Dianshanhu Town, Kunshan, Jiangsu, 215345**<br>**CHINA** |
| *The product complies with the standard(s)* | EN 60320-1:2015 |
| *Date of expiry* | 3 January 2023 |
| *EU Directive information* | According to the principle of presumption of conformity, this certificate constitutes support for an EC Declaration of Conformity and CE marking according to the Low Voltage Directive 2014/35/EU. |

Additional information in Appendix.

*Certification Body* Intertek Semko AB, Product Certification *Place* Kista - Stockholm

*Signed* Helen Gustafsson *Date* 27 June 2018



*This certificate is issued in accordance with the terms and conditions set out in the Appendix.*

Intertek

Intertek

# Appendix

*Reference No. 1812069*

*Technical data*

| | |
|---|---|
| *Type designation* | CDJ-7, CDJ-7 1 |
| *Rated voltage (V)* | 250V~ |
| *Rated current (A)* | 10A |
| *Standard Sheet* | C14 |
| *Brand name* | DLK |
| *Product information* | Appliance inlet for class I equipment |

*Manufacturing site(s)*

Kunshan DLK Electronics Technology Co.Ltd.
No. 278, Huangpujiang South Road, Dianshanhu Town, Kunshan
Jiangsu, 215345
CHINA

According to the principle of presumption of conformity, this certificate, which includes production control, constitutes support for an EC Declaration of Conformity and CE marking according to the Low Voltage Directive 2014/35/EU.
This presumption can expire before end of validity of this certificate due to new issued Standard or Amendment and changes within the EU legislation.

The instruction for use shall be written in a language acceptable according to the national regulation in the country where the product is to be used.

This certificate replaces previously issued ref. No. 1721423 dated 3 January 2018.
A new certificate has been issued on account of added additional model.

*Certification Body* Intertek Semko AB, Product Certification *Place* Kista - Stockholm

*Signed* _____ *Date* 27 June 2018
Helen Gustafsson

*This Certificate is for the exclusive use of Intertek's Client and is provided pursuant to the Certification agreement between Intertek and its Client. Intertek's responsibility and liability are limited to the terms and conditions of the agreement. Intertek assumes no liability to any party, other than to the Client in accordance with the agreement, for any loss, expense or damage occasioned by the use of this certificate. Only the Client is authorized to permit copying or distribution of this certificate and then only in its entirety. Use of Intertek's Certification mark is restricted to the conditions laid out in the agreement. Any further use of the Intertek name for the sale or advertisement of the tested material, product or service must first be approved in writing by Intertek. Initial Factory Assessments and Follow up Services are for the purpose of assuring appropriate usage of the Certification mark in accordance with the agreement, they are not for the purposes of production quality control and do not relieve the Client of their obligations in this respect.*

# Licence for

## CENELEC ENEC Agreement Licence Ref. No. SE/14029-5

| | |
|---|---|
| **Product:** | **Appliance inlet** |
| **Type designation:** | CDJ-7, CDJ-7 1 |
| **Test Report No.** | 180509033GZU-001 |
| **Licence holder:** | Kunshan DLK Electronics Technology Co., Ltd.<br>No. 278, Huangpujiang South Road,<br>Dianshanhu Town, Kunshan Jiangsu, 215345,<br>CHINA |
| **The product complies with the standard(s):** | EN 60320-1:2015 |
| **Licence holder is authorized to use the mark with the following limitations:** | - |
| **Date of expiry:** | 20 July 2023 |
| **EU Directive information:** | According to the principle of presumption of conformity, this certificate constitutes support for an EC Declaration of Conformity and CE marking according to the Low Voltage Directive 2014/35/EU. |

**Additional information in Appendix**

| | | | |
|---|---|---|---|
| *Certification Body* | Intertek Semko AB, Product Certification | *Place* | Kista - Stockholm |
| *Signed* | Leif Söderlund<br>Leif Söderlund | *Date* | 20 July 2018 |
| *Internal reference:* | EHG | | |



This Licence is the result of testing a sample of the product submitted, in accordance with the provisions of the relevant specific standard. A copy of the Licence shall be filed in the place of manufacturing. The Licence has been established by a body which is a signatory to the ENEC Agreement ratified by CENELEC Marks Committee on 10 April 1992.

**Intertek Semko AB**
Torshamnsgatan 43, Box 1103, SE-164 22 Kista, Sweden
Telephone +46 8 750 00 00, Fax +46 8 750 60 30, www.sweden.intertek-etlsemko.com
Registered in Sweden: No SE556024059901, Registered office: As address

# APPENDIX

## CENELEC ENEC Agreement Licence Ref. No. SE/14029-5

**Test Report No.** 180509033GZU-001

**Technical data**

| | |
|---|---|
| *Type designation* | CDJ-7, CDJ-7 1 |
| *Rated voltage (V)* | 250V~ |
| *Rated current (A)* | 10A |
| *Standard Sheet* | C14 |
| *Brand name* | DLK |
| *Product information* | Appliance inlet for class I equipment |

**Manufacturing site(s):**

Kunshan DLK Electronics Technology Co.Ltd.
No. 278, Huangpujiang South Road, Dianshanhu Town,
Kunshan Jiangsu, 215345,
CHINA

According to the principle of presumption of conformity, this certificate, which includes production control, constitutes support for an EC Declaration of Conformity and CE marking according to the Low Voltage Directive 2014/35/EU.
This presumption can expire before end of validity of this certificate due to new issued Standard or Amendment and changes within the EU legislation.

The instruction for use shall be written in a language acceptable according to the national regulation in the country where the product is to be used.

*Certification Body* Intertek Semko AB, Product Certification *Place* Kista - Stockholm

*Signed* Leif Söderlund *Date* 20 July 2018

Leif Söderlund



**Intertek Semko AB**
Torshamnsgatan 43, Box 1103, SE-164 22 Kista, Sweden
Telephone +46 8 750 00 00, Fax +46 8 750 60 30, www.sweden.intertek-etlsemko.com
Registered in Sweden: No SE556024059901, Registered office: As address