承 認 書

SPECIFICATION FOR APPROVAL

客戶(Customer)：	鈺緯科技開發股份有限公司
客戶料號(Customer P/N)：	3LFBC00741Y (L0207)
供應商 (Supplier Audit)：	東莞市拓銳電子科技有限公司
產品型號(Model No.)：	CUW11T-900M-N
品名(Description)：	貼片電感
規格(Specification)：	共模濾波器 CUW11T-900M-N

客戶承認欄 (Customer Authorization Signature)	供應商 (Supplier Audit)		
設計驗證 工程課 2025 -07- 17 發行 鈺緯科技開發股份有限公司	Approver	Checker	Author
	JACK	RACY	YOYO
	日期： 2025 年6 月12 日		

Revision History

Version	Date	Description	Author
A0	2025.6.12		

TOPRATE ELECTRONIC TECHNOLOGY CO.,LTD. DONGGUAN 东莞市 拓锐电子科技有限公司 业务专用章

东 莞 市 拓 銳 電 子 有 限 公 司

TOPRATE ELECTRONIC INDUSTRIAL LIMITED

中國 廣東省 東莞市 南城區 聯科國際信息產業園1棟803
Address:803.Building 1.LINK International Information Industry Park.No.96.Shuilianshan Road.Nancheng District.Dongguan City.GuangDong Province.China
TEL：+86(0)769-2278 3660 FAX：+86(0)769-2863 0959
QQ:1589463929 MOB:+86-150 1488 5776 JACK Email:jack@toprate.vip

ISO9001 ISO14001 IATF16949 **CHILISIN ELECTRONICS CORP.**

RoHS & Halogen Free & REACH Compliance.

SPECIFICATION FOR APPROVAL

Customer：

Customer P/N: 6J.10280.011

Drawing No： A0X2000176

Quantity： **0** **Pcs.** **Date：** **2021/08**

Chilisin P/N： **CUW11T-900M-N**

SPECIFICATION ACCEPTED BY:	
COMPONENT ENGINEER	
ELECTRICAL ENGINEER	
MECHANICAL ENGINEER	
APPROVED	
REJECTED	

奇力新電子股份有限公司
Chilisin Electronics Corp

Drawn by	Checked by	Approved by
陳瑞揚 ryan.chen	**吳振賢 lcn07**	**陳瑞揚 ryan.chen**

YG19800348

ISO9001 ISO14001 IATF16949 CHILISIN ELECTRONICS CORP.

CUW11T Series Specification

1 Scope: This specification applies to CUW FILTER

2 Part Numbering:

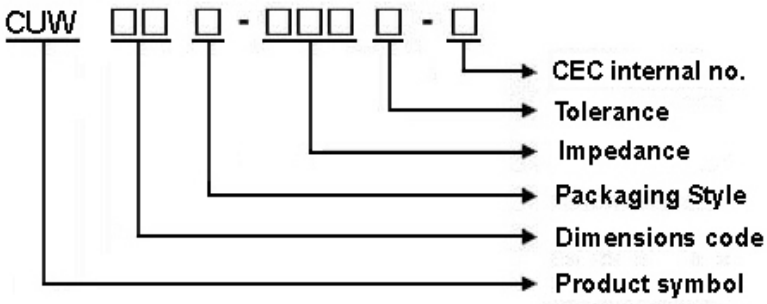

3 Rating:

Operating Temperature: －４０℃ ~ １０５℃(Including self - temperature rise)

Storage Temperature: ２０℃ ~ ２５℃ R.H.６５%(In Tape & Reel Condition)

4 Marking:

No Marking

5 Standard Testing Condition

	Unless otherwise specified	In case of doubt
Temperature	Ordinary Temperature(15 to 35℃)	20 to 30℃
Humidity	Ordinary Humidity(25 to 85% RH)	50 to 80 %RH

ISO9001 ISO14001 IATF16949 CHILISIN ELECTRONICS CORP.

CUW11T Series Specification

6 Configuration and Dimensions:

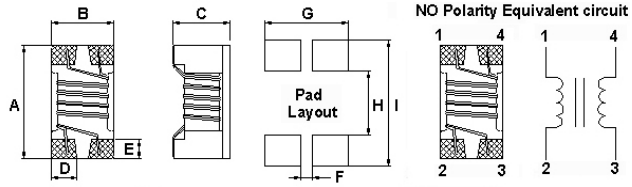

Dimensions in mm

TYPE	A	B	C	D	E	F	G	H	I
CUW11	1.25±0.2	1.0±0.2	0.8±0.1	0.32	0.33	0.36	1.0	0.59	1.75

7 Electrical Characteristics:

Part No.	Z (Ω)	RDC (Ω)Max.	IDC (mA)	Rated Voltage (Vdc)	Withstanding Voltage (Vdc)	Insulation Resistance (MΩ)(min)	Tolerance (±%)	Test Freq. (MHz)
CUW11T-250□-N	25	0.3	400	50	125	100	30	100
CUW11T-600□-N	60	0.4	300	50	125	100	20	100
CUW11T-670□-N	67	0.25	300	50	125	100	20	100
CUW11T-900□-N	90	0.3	250	50	125	100	20	100
CUW11T-121□-N	120	0.4	200	50	125	100	20	100
CUW11T-161□-N	160	0.43	160	50	125	100	20	100
CUW11T-201□-N	200	0.8	120	50	125	100	20	100
CUW11T-331□-N	330	1.3	100	50	125	100	25	100

NOTE: □-tolerance M=±20% / Y=±25% / T=±30%

1.Operating temperature range －４０℃～１０５℃(Including self - temperature rise)

2.RDC: SINGLE WIRE TEST VALUE

3.IDC for Inductance drop 10% from its value without current.

"-N" FOR COMPLETELY LEAD FREE TYPE(INCLUDING FERRITE BODY & SOLDER)

CUW11T Series Specification

8 CUW11T Series

8.1 Construction:

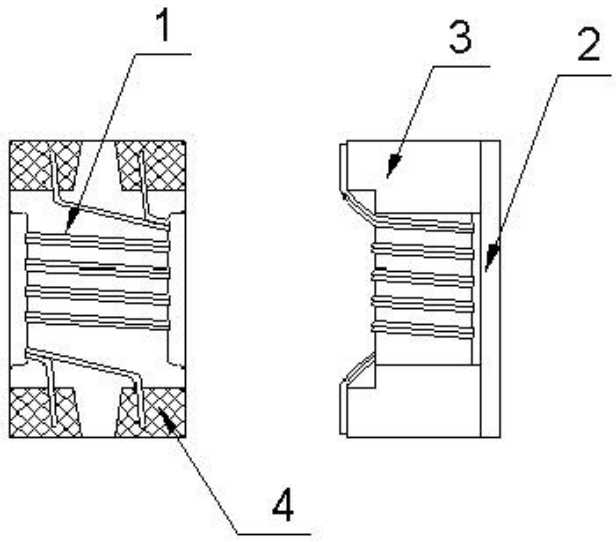

8.2 Material List:

No	Part	Material
1	WIRE	Grade 180
2	Cover sheet	FERRITE
3	CORE	FERRITE
4	TERMINAL	Ag/Cu/Ni/Sn

CUW11T Series Specification

9 Common Mode Choke / RELIABILITY TEST

1-1.Environmental Performance

No	Item	Specification	Test Method
1-1-1	Temperature Cycle	Appearance: No Damage Impedance: within±20% of initial value	One cycle: Step / Temperature (℃) / Time (min) 1 / -40±3 / 30 2 / 25±2 / 3 3 / 105±3 / 30 4 / 25±2 / 3 Total: 5 cycles Measured After Exposure in The Room Condition For 1hrs
1-1-2	Humidity Resistance		Temperature: 40±2℃ Relative Humidity: 90 ~ 95% Time: 100hrs Measured After Exposure In The Room Condition For 1hrs
1-1-3	High Temperature Resistance		Temperature:105±3℃ Time: 50Hrs Measured After Exposure In The Room Condition For 1Hrs
1-1-4	Low Temperature Resistance		Temperature: -40±3℃ Time: 50Hrs Measured After Exposure In The Room Condition For 1Hrs
1-1-5	High Temperature Load Life	There should be no evidence of short or open circle	Temperature:105±3℃ Load: Allowed DC Current Time: 500Hrs
1-1-6	Humidity Load Life		Temperature: 40±2℃ Relative Humidity: 90~95% Load: Allowed DC Current Time: 500Hrs

1-2.Mechanical Performance

No	Item	Specification	Test Method
1-2-1	Resistance To Soldering Heat	Appearance: No Damage	1. The device should be reflow soldered on PCB (peak 260℃±5℃ for 10 seconds) 2. Solder Composition: Sn/Ag3.0/Cu0.5 3. Test time: 6 minutes
1-2-2	Solder ability	The electrodes shall be at least 95% covered with new solder coating	1. Pre-Heating: 150℃,1min. 2. Solder Composition: Sn/Ag3.0/Cu0.5 3. Solder Temperature: 245±5℃. 4. Immersion Time: 4±1 sec.
1-2-3	Commponent Adhesion (Push Test)	1 Lbs. For 1210 Size 2 Lbs. For other	The device should be reflow soldered (245±5℃ For 10 seconds) to a tinned copper substrate. A force guauge should be applied to the side of the component. The device must withstand a minimum force of 2 pounds without a failure of the termination attached to component

CUW11T Series Specification

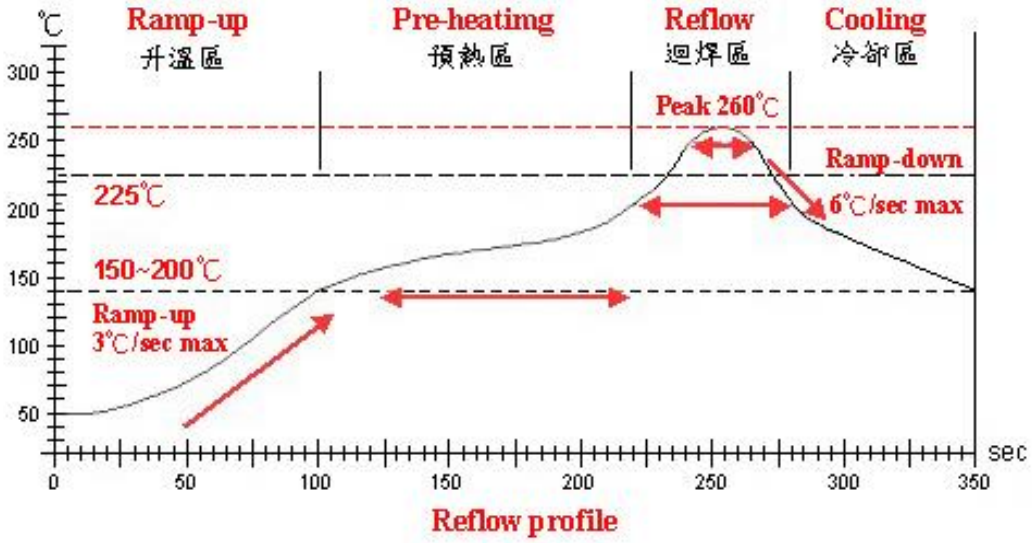

Reflow profile

Lead-Free(LF) 標準溫度分析範圍 Refer to J-STD-020C

管制項目 Item.	升溫區 Ramp-up	預熱區 Pre-heatimg	迴焊區 Reflow	Peak Temp	冷卻區 Cooling
溫度範圍 Temp.scope	R.T.~150℃	150℃~200℃	225℃	260±5℃	Peak Temp.~150℃
實際時間 Time result	—	60~180 sec	20~60 sec	5~10 sec	—

NOTE :

1. Re-flow possible times : within 2 times
2. Nitrogen adopted is recommended while in re-flow

CUW11T Series Specification

10 Product Test Data

Form No.: QF-1419
Edition: 2

Chilisin P/N: CUW11T-900M-N

Test Item (unit)	Z (Ω)	RDC (Ω)	IDC W11T-900M	A mm	B mm	C mm				
Customer Requirement	90±20%									
Spec Criteria		0.3Max.	250	1.25±0.2	1.0±0.2	0.8±0.1				
Test Condition	100MHz									
1	91	0.178	OK	1.30	1.02	0.82				
2	93	0.190	OK	1.30	1.03	0.84				
3	86	0.181	OK	1.30	1.03	0.85				
4	95	0.188	OK	1.29	1.03	0.86				
5	94	0.187	OK	1.29	1.03	0.85				
6	93	0.190	OK	1.30	1.04	0.84				
7	86	0.181	OK	1.30	1.03	0.85				
8	95	0.188	OK	1.29	1.03	0.86				
9	94	0.187	OK	1.29	1.03	0.85				
10	91	0.178	OK	1.30	1.02	0.82				
11										
12										
13										
14										
15										
$\overline{X}$	91.8	0.1848		1.296	1.029	0.844				
R	9	0.012		0.01	0.02	0.04				
Customer Sample										

Test Instrument

HP4286A / HP4287A / AgilentE4991A FOR Z
Chroma 16502 RDC(SIGNLE WIRE TEST VALUE)
HP4339B FOR Insulation Resistance
HP4284A+HP42841A/HP4285A+HP42841A FOR IDC

Appearance and Dimensions:

Appearance: Visual inspection according to inspection criteria.
Dimension: Measured with slide calipers.

Test Conditions:

	Unless Otherwise Specified	
Temperature	Ordinary Temperature (15 to 35℃)	
Humidity	Ordinary Humidity (25 to 85 %RH)	

CUW11T Series Specification

11 Packaging:

11.1 Packaging -Cover Tape

The force for tearing off cover tape is 10 to 100 grams in the arrow direction.

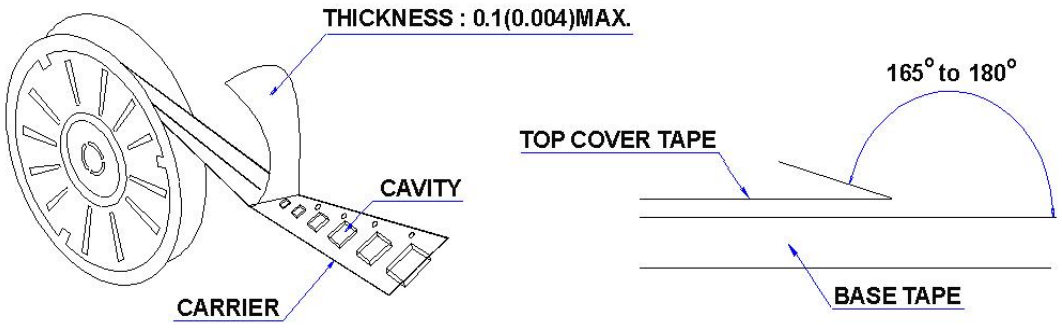

11.2 Packaging Quantity

TYPE	PCS/REEL
CUW11	2000

11.3 Reel Dimensions

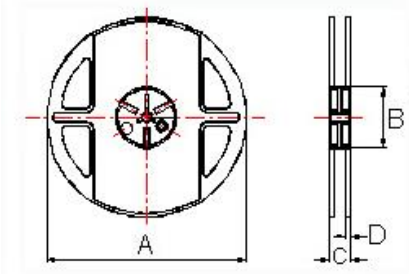

Dimensions in mm

TYPE	A	B	C	D
CUW11	178	60	12	1.5

CUW11T Series Specification

11 Packaging:

11.4 Tape Dimensions in mm

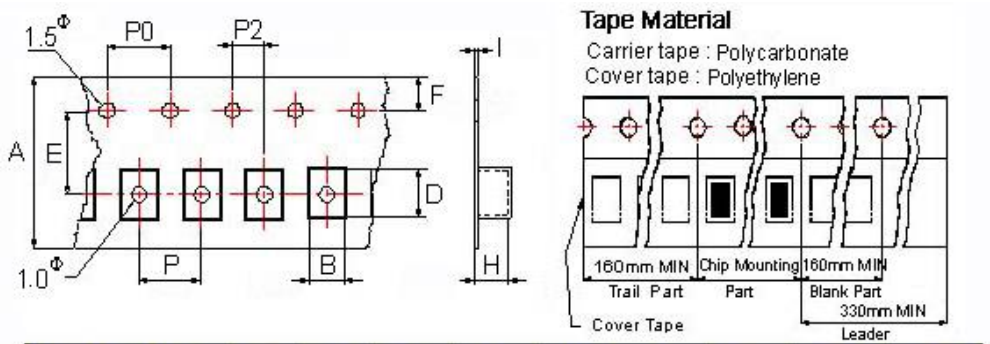

TYPE	A	B	D	E	F	H	I	P	P0	P2
CUW11	8	1.15	1.45	3.5	1.75	1.00	0.24	4	4	2

12 Recommended Land Pattern:

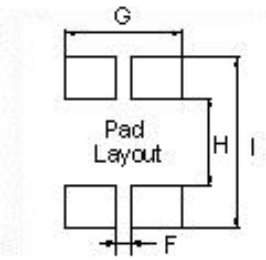

Dimensions in mm

TYPE	F(in/mm)	G(in/mm)	H(in/mm)	I(in/mm)
CUW11	0.014/0.36	0.039/1.0	0.023/0.59	0.069/1.75

13 Note:

1. Please make sure that your product has been evaluated and confirmed against your specifications when our product is mounted to your product.
2. Do not knock nor drop.
3. All the items and parameters in this product specification have been prescribed on the premise that our product is used for the purpose,under the condition and in the environment agreed upon between you and us. You are requested not to use our product deviating from such agreement.

4.The storage period is less than 12 months. Be sure to follow the storage conditions (Temperature: 5 to 40°C, Humidity: 10 to 75% RHor less).
If the storage period elapses, the soldering of the terminal electrodes may deteriorate.

5.Do not use or store in locations where there are conditions such as gas corrosion (salt, acid, alkali, etc.).

CUW11T Series Specification

14 Graph: CUW11T-900M-N

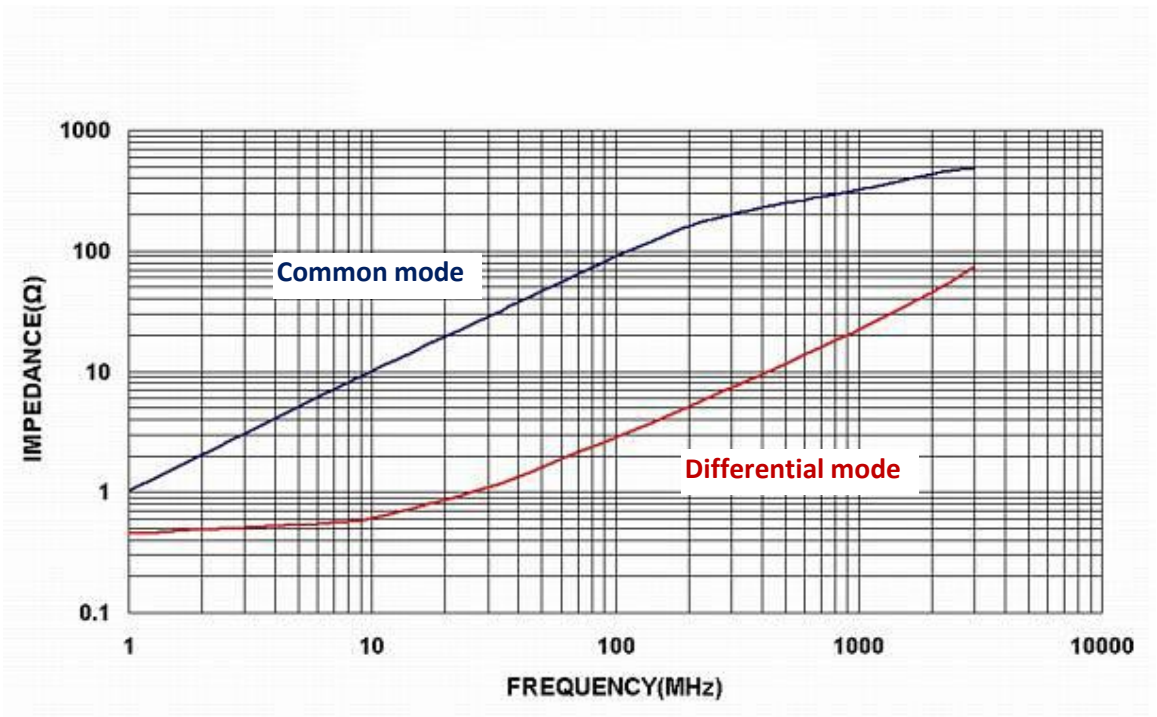

ISO9001 ISO14001 IATF16949 CHILISIN ELECTRONICS CORP.

包裝Label 之零件 Part number 說明:

REEL

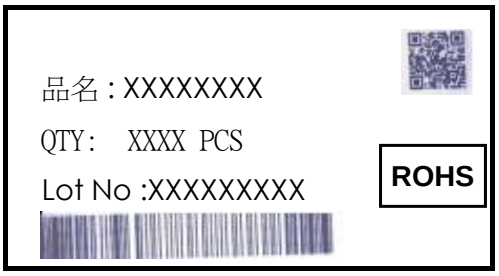

Box



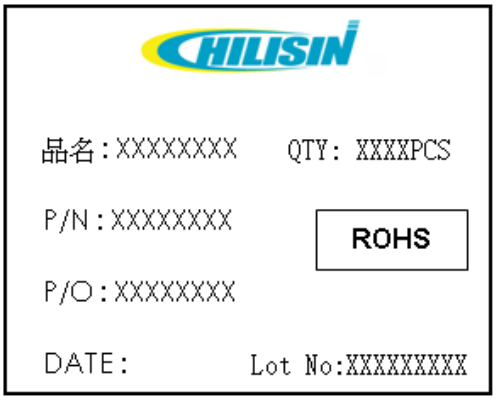

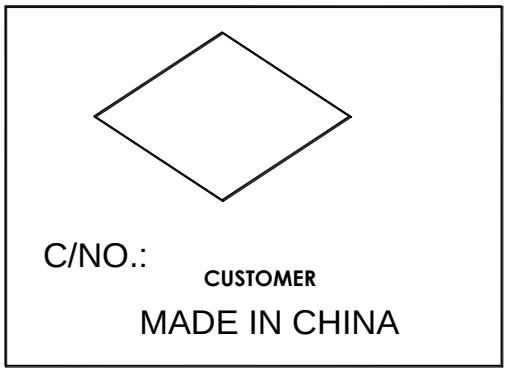

MADE IN CHINA

