規 格 書

SPECIFICATION

DOC. NO.： JS00000529	VERISON： 001
PART NO.： 187059-51221	
PART NAME： LVDS 9 A TYPE 51PIN CONNECTOR	
CUSTOMER NAME： DIVA	
CUSTOMER PART NO.： 3FF05116710 (F0326)	

設計驗證
工程課
2025 -07- 11
發行
鈺緯科技開發股份有限公司

MANUFACTURER SIGNATURE

RoHS

■ **P-TWO INDUSTRIES INC.**

NO.9, SHIN HWA ROAD., KWEI SHAN, IND, PARK, TAOYUAN DIST., TAOYUAN, 330 TAIWAN

TEL: +886-3-379999 FAX: +886-3-3762222

■ **P-TWO TECHNOLOGY CO., LTD.(SUZHOU)**

NO. 158-86 HUASHAN ROAD, FENG QIAO INDUSTRIAL PARK, NEW DISTRICT, SUZHOU, JIANGSU, CHINA

TEL: +86-512-66617666 FAX: +86-512-66617222

TABLE OF CONTENT

I. HISTORY REVISION

II. SPECIFICATION OF PRODUCT

III. PART NUMBER DEFINITION

IV. INFRARED REFLOW CONDITION

V. REACH&SGS

VI. CUSTOMER DRAWING

VII. PACKAGE INSTRUCTION

HISTORY REVISION

VER	Date	Page	Reason for revision.	ISS.
01	2025/6/12	Add	Initial Release	Allen

PART NAME	DOC. NO.	VERSION
187059-51221	JS00000529	001

SPECIFICATION OF PRODUCTS

1. Scope:

This specification covers the requirements for product performance, and test methods provisions of 0.5mm PITCH LVDS CONNECTOR.

2. Applicable documents:

The following documents form a part of this specification to the extent specified herein. In the event of conflict between the requirements of this specification and the product drawing, the product drawing shall take precedence. In the event of conflict between the requirements of this specification and the referenced documents, this specification shall take precedence.

2.1 Standard and Specifications:

EIA 364 Test methods for electrical component parts.

IEC-60068 Test methods for electrical component parts.

3. Requirements:

3.1 Designs and Construction:

Product shall be of the design, construction and physical dimensions specified in the applicable product drawing.

3.2 Materials:

A. Terminal: Copper Alloy. Gold Plating (Lead Free).

B. Ground Pin : Stainless Steel. Matte Tin Plating (Lead Free).

C. Housing: Heat Resistance Plastic (UL94 V-0).

D. Shell: Stainless Steel. Matte Tin Plating (Lead Free).

E. Lock Pin: Stainless Steel.

3.3 General Specification:

A. Voltage Rating: 200V (AC/DC)/Contact.

B. Current Rating: 0.5A (AC/DC)/Contact.

C. Operation Temperature & Humidity Rating: -40℃~+85℃, 95%MAX.

D. Storage Temperature & Humidity: -5°C ~40°C /10%~75% up to 1 year (with sealed bag& desiccant)

E. Transportation Temperature & Humidity : -40℃~+85℃, 95%MAX. (After assembling on Board)

F. After unpacking the sealed bag, please mount it as soon as possible. If sealed bag is open without mounting right away, recommend bake it before mounting.

3.4 GP requires substances (level1) forbidden (Including orders placed to subcontractors)

4.Notice:

4.1 The application of product corresponding to the form of “SPECIFICATION” must be limited to every item that be approved by “SPECIFICATION”.

If there are any applications overstep “SPECIFICATION”, P-TWO will not be responsible for any guarantee or related liability.

SPECIFICATION OF PRODUCTS

4. Electrical Performance:

No.	Items	Test Procedures	Requirements
4.1	Contact Resistance	EIA-364-23 (termination of connector or socket to board carrier shall be included in measurements). （Max：20mV，100mA）	Initial: 40 mΩ MAX..
4.2	Insulation Resistance	It should be tested in accordance with method EIA-364-21. When 500V DC is applied between adjacent contacts and insulation resistance is measured within one minute.	100 MΩMIN
4.3	Dielectric Strength	The connector shall be tested in accordance with method EIA-364-20. When the 500V AC r.m.s for one minute applied between adjacent contacts.	No Breakdown
4.4	Temperature rise	The connector shall be tested in accordance with EIA-364-70C. Apply specified current to contacts connected in series.	Temperature rise value: 30℃ (Max.) at current 0.5A

5. Mechanical Performance:

No.	Items	Test Procedures	Requirements
5.1	Appearance	Visually, dimensionally and functionally inspected per applicable product drawing.	Product shall be conforming to the requirements of applicable product drawing.
5.2	Insertion and withdrawal force	In accordance with method EIA-364-13. Measure force necessary to mate between the counterpart connectors (Excluding lock)	First time:1.96N X n (Max.) “n”=number of pins
5.3	Withdrawal force	In accordance with method EIA-364-13 Measure force necessary to mate between the counterpart connectors (Excluding lock)	First time:0.25N X n (Min.) “n”=number of pins
5.4	Contact Retention	In accordance with method EIA-364-29 Apply axial pull out of force at the speed of 25.4±3 mm/min on the terminal assembled in the housing.	1.5 N (150 gf) Min./per pin

SPECIFICATION OF PRODUCTS

6. Physical Performance:

No.	Items	Test Procedures	Requirements
6.1	Durability	In accordance with method EIA-364-09 Mate applicable LVDS cable and insert and withdraw actuator at the speed rate of 25±3 mm/minute. (Excluding lock) Times：Up to 50 cycles	Appearance neither damage nor crack. Contact Resistance： 80mΩMAX
6.2	Vibration	In accordance with method EIA-364-28 test condition: I Wave form：Sine wave Frequency：10~55~10Hz in 1 minutes Double Amplitude：1.52mm Orientation：X,Y,Z (3 axes) Duration：2 hours /axis	Appearance：no damage, cracks, or parts dislocation. Contact Resistance： 80mΩMAX Discontinuity：1μs MAX
6.3	Shock	In accordance with method EIA-364-27 Test condition：A MAX acceleration：50G Wave form：Half sine wave Orientation：X,Y,Z (3 axes) Duration：11ms./axis Times：3 strokes in each X,Y,Z axis	Appearance：no damage, cracks, or parts dislocation. Contact Resistance： 80mΩMAX Discontinuity：1μs MAX
6.4	Solderability	It should be tested to compare with method EIA-364-52 Steam Aging 8H Soldering time：5±0.5 seconds Solder temperature：245±5°C	More than 95% of the immersion shall be covered with solder.
6.5	Resistance to soldering heat	In accordance with method EIA-364-56 1. manual soldering： Soldering time：3 seconds MAX Solder temperature：350±10℃ 2.Reflow： Peak temperature：260+5/-0℃ Time: 10 +2/-0 Sec Condition：3 cycles	No deformation of components affecting performance.
6.6	Lock strength	In accordance with method EIA-364-13. Measure the lock intensity as the connector (of the counterpart connectors) at the cable side is pulled.(Forceful pull is applied at the first test.)	Connectors should not be apart by forceful pull of 49N(Max.) at the first test.

SPECIFICATION OF PRODUCTS

7. Environmental Performance:

No.	Items	Test Procedures	Requirements
7.1	Salt spray	In accordance with method EIA-364-26 Test condition：B Temperature：35+1°C /-2°C Density：5±1% in weight Duration：48 hours	Contact Resistance： 80mΩMAX
7.2	Humidity (steady state)	In accordance with method EIA-364-31 Method II, Temperature：60±3°C Relative Humidity：90~95% Duration：500 hours	No damage. Insulation resistance: 50 MΩ (Min.) Voltage proof 250V r.m.s 、1 minute. No breakdown. Contact resistance: 80 mΩ (Max.)
7.3	Temperature cycling (Thermal Shock)	In accordance with method EIA-364-32 Method A, condition I, test duration A-1 Temperature： -55+0/-5°C (30min) →Specimen transfer time from cold to hot (5min) → 85+3°C /-0 (30min) →Specimen transfer time from cold to hot (5min) Condition：100 cycles	
7.4	Humidity, temperature cycling	In accordance with method EIA-364-31 method IV Temperature：25 °C ± 3 °C to 65 °C ± 3 °C Lower temp: -10°C Cycle duration: 24 hours Duration: 10 cycles	
7.5	Temperature life High (Heat Resistance)	In accordance with method IEC-60068-2-2 Temperature：80±2°C Duration：500 hours	
7.6	Temperature life Cold (Cold Resistance)	In accordance with method IEC-60068-2-1 Temperature：-40±2°C Duration：500 hours	
7.7	Corrosion, H2S gas	In accordance with method EIA-364-65. H2S gas density: 3ppm Temperature: 40±2°C Duration: 96 hours Humidity : 90％	Contact resistance: 80 mΩ (Max.)
7.8	Ammonia(NH3) resistance	In accordance with method EIA-364-65B. Ammonia density: Evaporating from 28% ammonia. Temperature : 40±2°C Duration: 40 minutes Humidity : 75％	Contact resistance: 80 mΩ (Max.)

PART NUMBER DEFINITION

1. Specifications:
   (1) Connector Styles:
   ZIF (Zero Insertion Force) Type.
   (2) Mounting of Connector On Board:
   SMT (Surface Mounted Technology) Type.
   (3) Centerline (Pitch):
   0.5mm (0.02 inch)

2. Part No.:

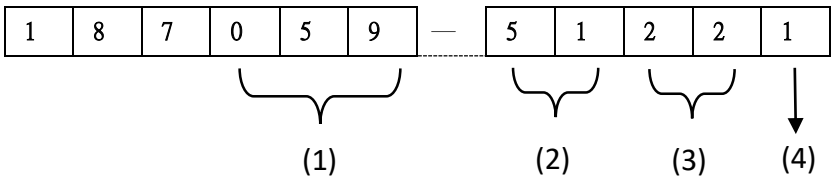

   (1) Type Of Connectors:
   059 : LVDS 0.5 PITCH
   (2) No. Of Contacts:
   51 pin
   (3) Plating:
   22: Au , Matte Tin(100%)(Lead Free) overall Nickel.
   (4) Package:
   1: Tape & Reel.
   (5) Halogen-Free:

PART NAME	DOC. NO.	VERSION
187059-51221	JS00000529	001

INFRARED REFLOW CONDITION

Sn-Ag-Cu PROFILE

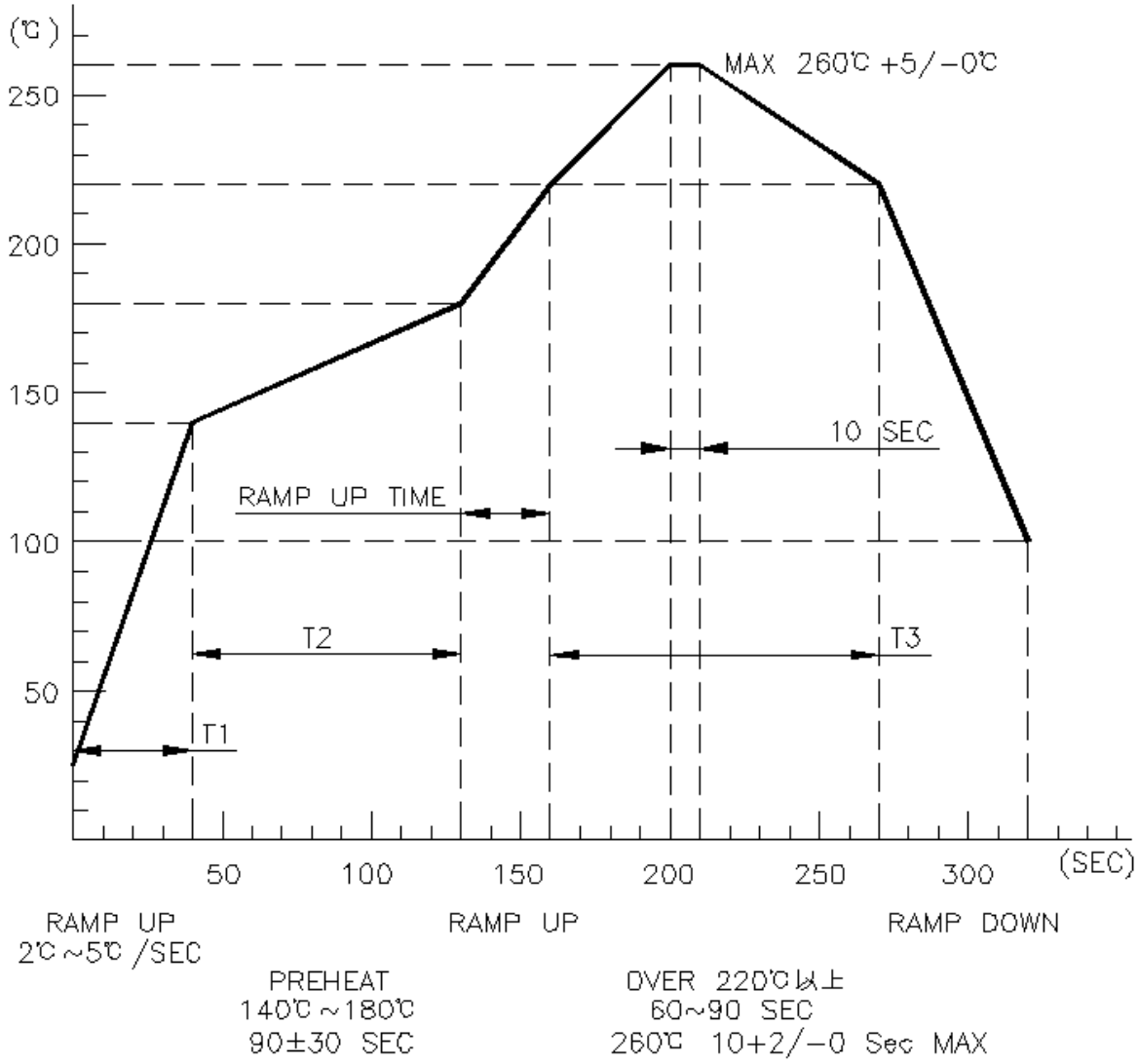

T1:	Temperature Ramp Up Rate	2℃~5℃ /SEC
T2:	Preheat: 140℃~180℃	90±30 SEC
T3:	Time Over 220℃	60~120 SEC
T4:	Ramp Down Rate During Cooling	4℃~8℃ /SEC
	Peak Temperature	260+5/−0℃ Max

Note：AS this reflow condition varies in the reflow facility and PCB, please conduct the evaluation of your conditions before manufacturing

PART NAME	DOC. NO.	VERSION
187059-51221	JS00000529	001

PRECAUTION FOR USE

About mating connectors

1. The connectors should be mated/unmated each other in parallel way.

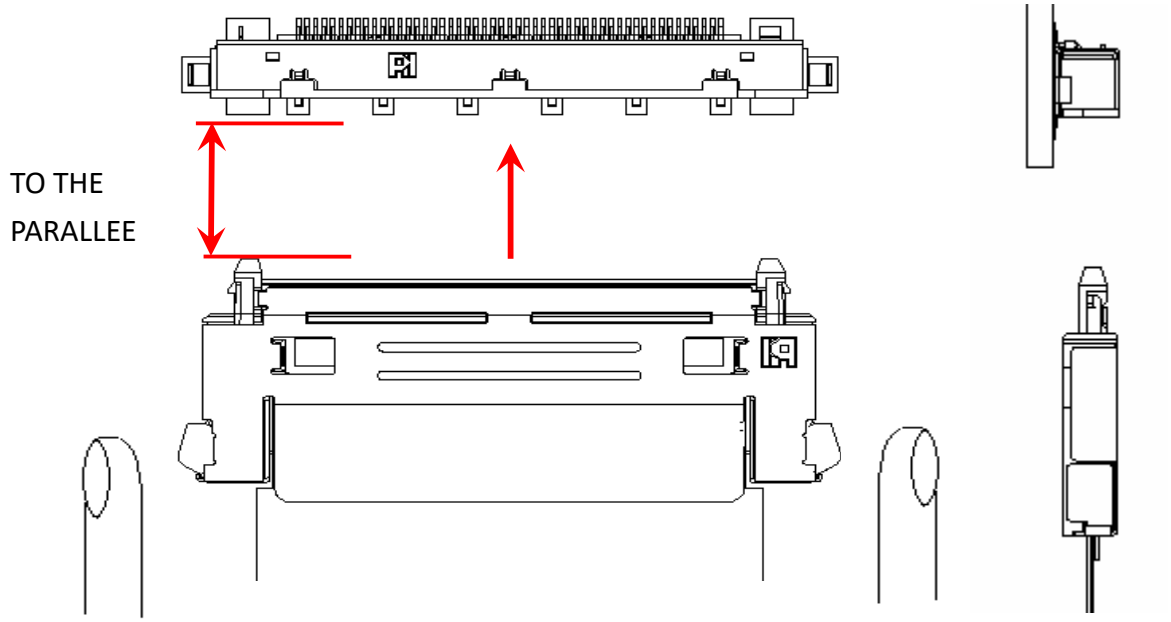

2. Mating

(1) Do not insert a connector to a counterpart connector if there is a gap(A) in the other side as they are being mated. Confirm that the plug and receptacle are guided to each other in parallel.

Please guide it to be parallel before inserting it.

(2) Confirm that the plug and the receptacle are guided to each other.

(3) Press down “Lock” and push in the conn.

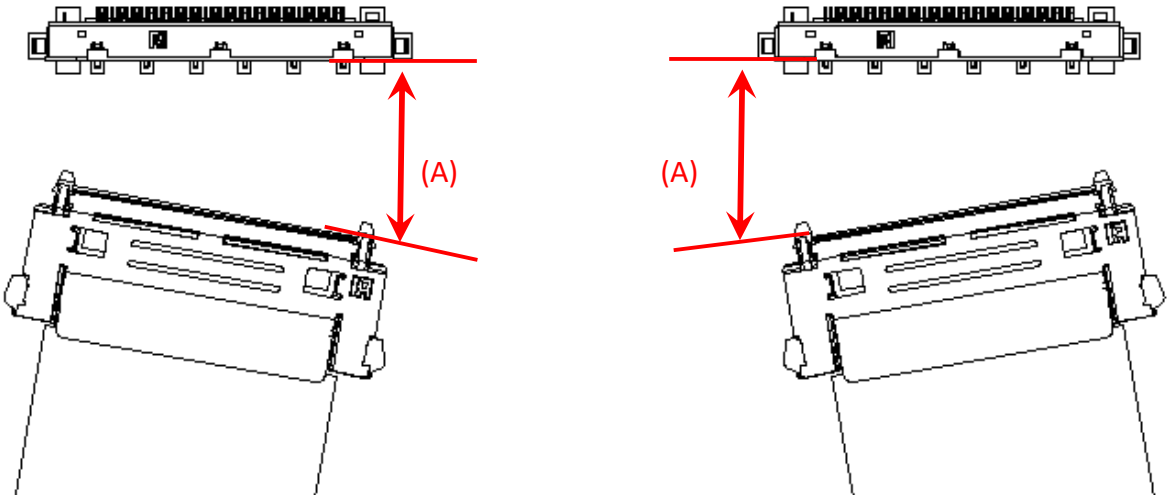

PART NAME	DOC. NO.	VERSION
187059-51221	JS00000529	001

PRECAUTION FOR USE

3. Unmating

Pull out a cable side connector in parallel to a counterpart connector.
Do not hold and turn neither sides of the base nor the cable to unmate the Connectors as shown in the figure.

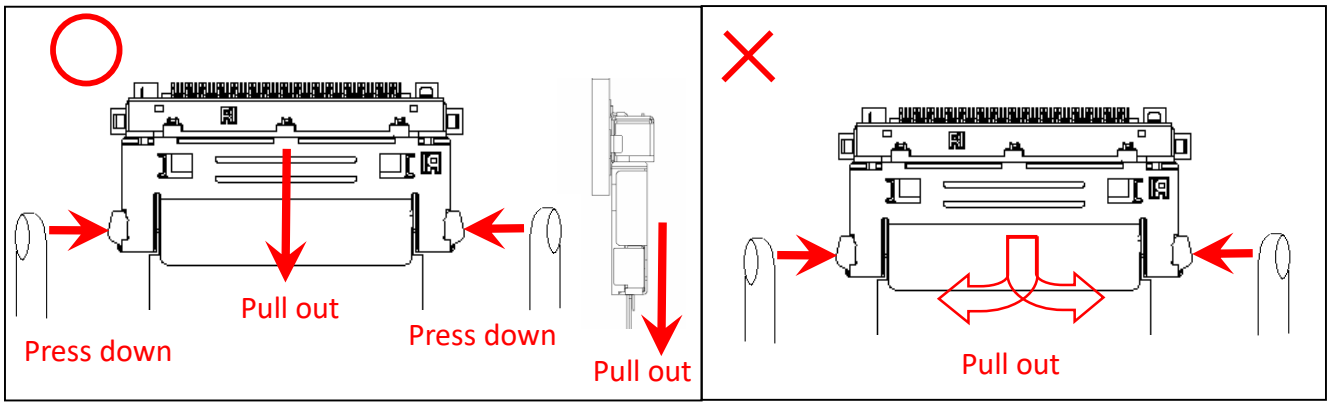

4. Do not bend the pc board in directions shown in the figure.

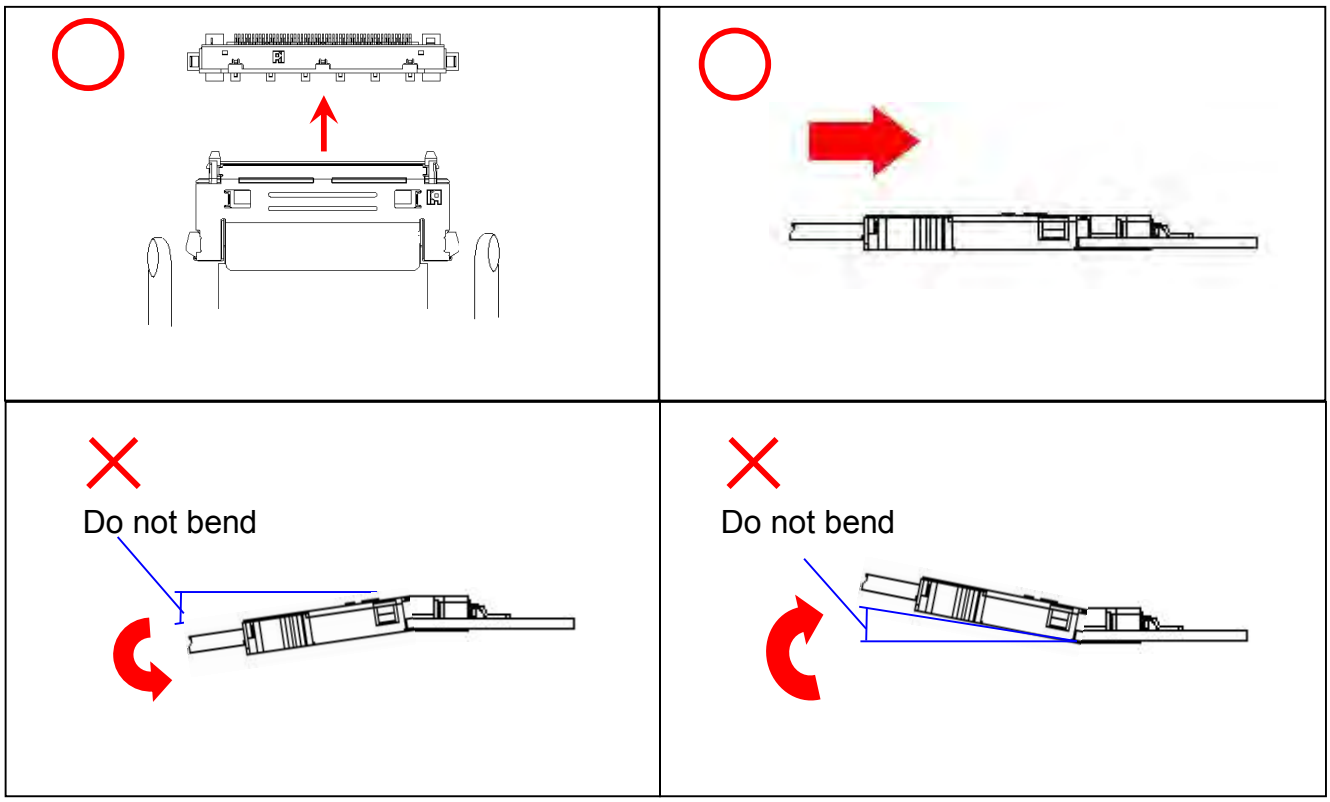

PART NAME	DOC. NO.	VERSION
187059-51221	JS00000529	001

文件編號：FGP-35

版本：0

達昌電子科技(蘇州)有限公司
P-TWO ELECTRIC TECHNOLOGY (SUZHOU) CO., LTD.

REACH調查表

1.Product and company information(基本資料)

Vendor Name(供應商名稱)： P-TWO ELECTRIC TECHNOLOGY (SUZHOU) CO.,LTD. （達昌電子科技(蘇州)有限公司）
Vendor Address(供應商地址)：NO 158-86 Huashan RD., Fengqiao Industrial Park, New District Suzhou, Jiangsu, China（蘇州新區楓橋工業園華山路158-86號）
Phone Numbers(聯絡電話)： +86-512-66617666
Name of Responsible Persone/Title (負責人/職稱)： Jacky.lee/ QA Manager （品保經理/李家祺）
Respondent's Name(填表者)： Bingxue Pan（潘冰雪）
Respondent's Mail Address(填表者電子郵件)： bingxue.pan@sz.p-two.com.cn
Date(填表日期)： 2025/2/24
Part Name & Part Number(零件名稱及料號)： ALL

SVHC 1~33 under EU REACH

2. REACH SVHCs Summary(including 247 items(by 2025/01/21)). Please refer to the sheet "REACH SVHCs"
REACH SVHCs 247項(2025/01/21公告)物質調查結果說明，詳細項目請參考"REACH SVHCs"

☑ Not contain REACH SVHCs(不含REACH SVHCs清單內物質)

☐ Contain the REACH SVHCs.(含有REACH SVHCs清單內物質)

If the part contains REACH SVHCs, please fill in the following table.
(若含REACH SVHCs清單內物質，請填寫以下項目)

項次 Item	含有部位 The position of use	含有部位重量(克) Homogenous Material Weight(g)	使用材質 Material	含有物質名稱 Substance Name	CAS.NO.	物質含量(ppm) Substance Content(ppm)	物質含量(克) Substance content(g)	用途說明 Purpose of use	備註 (資料來源) Remark

3. REACH ANNEX XVII Substances Summary(including 79 items). Please refer to the sheet "REACH ANNEX XVII"
REACH 附錄17物質 79項物質調查結果說明，詳細項目請參考"REACH ANNEX XVII")

☑ Not contain the investigation substances in REACH ANNEX XVII Substance list.(不含REACH 附錄17內物質)

☐ Contain the investigation substances in REACH ANNEX XVII Substance list.(含有REACH 附錄17物質)

If the part contains REACH ANNEX XVII Substance, please fill in the following table.
(若含 REACH 附錄17物質，請填寫以下項目)

項次 Item	含有部位 The position of use	含有部位重量(克) Homogenous Material Weight(g)	使用材質 Material	含有物質名稱 Substance Name	CAS.NO.	物質含量(ppm) Substance Content(ppm)	物質含量(克) Substance content(g)	用途說明 Purpose of use	備註 (資料來源) Remark

All products provided to your company comply with the latest EU REACH regulations
提供給貴公司的所有產品，均符合EU REACH最新規定
(The regulation website is 該法規網址為: http:/ /echa.europa.eu/chem_data/authorisation_process/candidate_list_table_en.asp),And the survey data filled in the following EU REACH Directive Substances of Very High Concern (SVHC) list is absolutely complete and correct. 若The products provided by the company and the submitted information result in violation of relevant laws and regulations by your company and/or your company's customers. The company is willing to take full responsibility for compensation to your company and your company's customers.且下列歐盟REACH 指令之高度關注物質(SVHC ）清單中填寫的調查資料絕對完整且正確。若本公司提供的產品與所提交的資料不符而導致貴公司及/或貴公司的客戶違反相關法令規定，本公司願對貴公司及貴公司之客戶負全部賠償責任。

Representative Signature or Seal (公司負責人印章/簽名):

Company Seal (公司公章):



Test Report

No.: SHAEC25011388509 **Date:** May 20, 2025

Client Name: P-TWO ELECTRIC TECHNOLOGY (SUZHOU) CO., LTD. / P-TWO INDUSTRIES INC.

Client Address: NO 158-86 Huashan RD., Fengqiao Industrial Park, New District Suzhou, Jiangsu, China

Sample Name: LCP

Model No.: E6807 LHF B Z

Material: E6807

The above sample(s) and information were provided by the client.

SGS Job No.: SHP25-015790

Sample Receiving Date: May 16, 2025

Testing Period: May 16, 2025 ~ May 20, 2025

Test Requested: Select test(s) as requested by the client.

Test Method(s): Please refer to next page(s).

Test Result(s): Please refer to next page(s).

Test Requirement	Conclusion
EU RoHS Directive (EU) 2015/863 amending Annex II to Directive 2011/65/EU - Lead, Mercury, Cadmium, Hexavalent chromium, Polybrominated biphenyls (PBB), Polybrominated diphenyl ethers (PBDE), Bis(2-ethylhexyl) phthalate (DEHP), Butyl benzyl phthalate (BBP), Dibutyl phthalate (DBP) and Diisobutyl phthalate (DIBP)	Pass
Element(s)	See Results
Halogen	See Results

Signed for and on behalf of
SGS-CSTC Standards Technical Services (Shanghai) Co., Ltd.

Carol Luo
Approved Signatory

Scan to see the report

3C8E6EF7

Unless otherwise agreed in writing, this document is issued by the Company subject to its General Conditions of Service printed overleaf, available on request or accessible at https://www.sgs.com/en/Terms-and-Conditions. Attention is drawn to the limitation of liability, indemnification and jurisdiction issues defined therein. Any holder of this document is advised that information contained hereon reflects the Company's findings at the time of its intervention only and within the limits of Client's instructions, if any. The Company's sole responsibility is to its Client and this document does not exonerate parties to a transaction from exercising all their rights and obligations under the transaction documents. This document cannot be reproduced except in full, without prior written approval of the Company. Any unauthorized alteration, forgery or falsification of the content or appearance of this document is unlawful and offenders may be prosecuted to the fullest extent of the law. Unless otherwise stated the results shown in this test report refer only to the sample(s) tested.
Attention: To check the authenticity of testing /inspection report & certificate, please contact us at telephone: (86-755) 8307 1443, or email: CN.Doccheck@sgs.com

3rd Building,No.889 Yishan Road Xuhui District,Shanghai China 200233 t E&E (86-21) 61402553 f E&E (86-21)64953679 www.sgsgroup.com.cn
中国·上海·徐汇区宜山路889号3号楼 邮编: 200233 t HL (86-21) 61402594 f HL (86-21)61156899 sgs.china@sgs.com

Test Result(s):

Test Part Description：

SN ID	Sample No.	SGS Sample ID	Description
SN1	A5	SHA25-0113885-0001.C005	Black solid

Remarks:

(1) 1 mg/kg = 1 ppm = 0.0001%
(2) MDL = Method Detection Limit
(3) ND = Not Detected (< MDL)
(4) "-" = Not Regulated

EU RoHS Directive (EU) 2015/863 amending Annex II to Directive 2011/65/EU - Lead, Mercury, Cadmium, Hexavalent chromium, Polybrominated biphenyls (PBB), Polybrominated diphenyl ethers (PBDE), Bis(2-ethylhexyl) phthalate (DEHP), Butyl benzyl phthalate (BBP), Dibutyl phthalate (DBP) and Diisobutyl phthalate (DIBP)

Test Method: With reference to IEC 62321-4:2013+AMD1:2017, IEC 62321-5:2013, IEC 62321-7-2:2017 and IEC 62321-12:2023, analysis was performed by ICP-OES/AAS, UV-Vis and GC-MS.

Test Item(s)	Limit	Unit(s)	MDL	A5
Lead (Pb)	1000	mg/kg	2	3
Mercury (Hg)	1000	mg/kg	2	ND
Cadmium (Cd)	100	mg/kg	2	ND
Hexavalent Chromium (Cr(VI))	1000	mg/kg	8	ND
Polybrominated biphenyls (PBB)	1000	mg/kg	-	ND
Monobrominated biphenyl (MonoBB)	-	mg/kg	25	ND
Dibrominated biphenyl (DiBB)	-	mg/kg	25	ND
Tribrominated biphenyl (TriBB)	-	mg/kg	25	ND
Tetrabrominated biphenyl (TetraBB)	-	mg/kg	25	ND
Pentabrominated biphenyl (PentaBB)	-	mg/kg	25	ND
Hexabrominated biphenyl (HexaBB)	-	mg/kg	25	ND
Heptabrominated biphenyl (HeptaBB)	-	mg/kg	25	ND
Octabrominated biphenyl (OctaBB)	-	mg/kg	25	ND
Nonabrominated biphenyl (NonaBB)	-	mg/kg	25	ND
Decabrominated biphenyl (DecaBB)	-	mg/kg	25	ND
Polybrominated diphenyl ethers (PBDE)	1000	mg/kg	-	ND
Monobrominated diphenyl ether (MonoBDE)	-	mg/kg	25	ND
Dibrominated diphenyl ether (DiBDE)	-	mg/kg	25	ND
Tribrominated diphenyl ether (TriBDE)	-	mg/kg	25	ND
Tetrabrominated diphenyl ether (TetraBDE)	-	mg/kg	25	ND
Pentabrominated diphenyl ether (PentaBDE)	-	mg/kg	25	ND
Hexabrominated diphenyl ether (HexaBDE)	-	mg/kg	25	ND
Heptabrominated diphenyl ether (HeptaBDE)	-	mg/kg	25	ND

Unless otherwise agreed in writing, this document is issued by the Company subject to its General Conditions of Service printed overleaf, available on request or accessible at https://www.sgs.com/en/Terms-and-Conditions. Attention is drawn to the limitation of liability, indemnification and jurisdiction issues defined therein. Any holder of this document is advised that information contained hereon reflects the Company's findings at the time of its intervention only and within the limits of Client's instructions, if any. The Company's sole responsibility is to its Client and this document does not exonerate parties to a transaction from exercising all their rights and obligations under the transaction documents. This document cannot be reproduced except in full, without prior written approval of the Company. Any unauthorized alteration, forgery or falsification of the content or appearance of this document is unlawful and offenders may be prosecuted to the fullest extent of the law. Unless otherwise stated the results shown in this test report refer only to the sample(s) tested.
Attention: To check the authenticity of testing /inspection report & certificate, please contact us at telephone: (86-755) 8307 1443, or email: CN.Doccheck@sgs.com

3rd Building,No.889 Yishan Road Xuhui District,Shanghai China 200233 t E&E (86-21) 61402553 f E&E (86-21)64953679 www.sgsgroup.com.cn
中国·上海·徐汇区宜山路889号3号楼 邮编: 200233 t HL (86-21) 61402594 f HL (86-21)61156899 sgs.china@sgs.com

Member of the SGS Group (SGS SA)

Test Item(s)	Limit	Unit(s)	MDL	A5
Octabrominated diphenyl ether (OctaBDE)	-	mg/kg	25	ND
Nonabrominated diphenyl ether (NonaBDE)	-	mg/kg	25	ND
Decabrominated diphenyl ether (DecaBDE)	-	mg/kg	25	ND
Bis(2-ethylhexyl) phthalate (DEHP)	1000	mg/kg	50	ND
Butyl benzyl phthalate (BBP)	1000	mg/kg	50	ND
Dibutyl Phthalate (DBP)	1000	mg/kg	50	ND
Diisobutyl Phthalate (DIBP)	1000	mg/kg	50	ND

Notes:
(1) The maximum permissible limit is quoted from RoHS Directive (EU) 2015/863.
(2) IEC 62321 series is equivalent to EN 62321 series.
(3) The restriction of DEHP, BBP, DBP and DIBP shall apply to medical devices, including in vitro medical devices, and monitoring and control instruments, including industrial monitoring and control instruments, from 22 July 2021.

Element(s)

Test Method: With reference to US EPA 3052:1996, analysis was performed by ICP-OES/AAS.

Test Item(s)	Unit(s)	MDL	A5
Antimony(Sb)	mg/kg	10	ND

Halogen

Test Method: With reference to EN 14582:2016, analysis was performed by IC.

Test Item(s)	Unit(s)	MDL	A5
Fluorine(F)	mg/kg	20	537
Chlorine(Cl)	mg/kg	50	ND
Bromine(Br)	mg/kg	50	ND
Iodine(I)	mg/kg	50	ND

Unless otherwise stated, the decision rule for conformity reporting is based on Binary Statement for Simple Acceptance Rule (*w*=0) stated in ILAC-G8:09/2019.

Unless otherwise agreed in writing, this document is issued by the Company subject to its General Conditions of Service printed overleaf, available on request or accessible at https://www.sgs.com/en/Terms-and-Conditions. Attention is drawn to the limitation of liability, indemnification and jurisdiction issues defined therein. Any holder of this document is advised that information contained hereon reflects the Company's findings at the time of its intervention only and within the limits of Client's instructions, if any. The Company's sole responsibility is to its Client and this document does not exonerate parties to a transaction from exercising all their rights and obligations under the transaction documents. This document cannot be reproduced except in full, without prior written approval of the Company. Any unauthorized alteration, forgery or falsification of the content or appearance of this document is unlawful and offenders may be prosecuted to the fullest extent of the law. Unless otherwise stated the results shown in this test report refer only to the sample(s) tested.
Attention: To check the authenticity of testing /inspection report & certificate, please contact us at telephone: (86-755) 8307 1443, or email: CN.Doccheck@sgs.com

3rd Building,No.889 Yishan Road Xuhui District,Shanghai China 200233 t E&E (86-21) 61402553 f E&E (86-21)64953679 www.sgsgroup.com.cn
中国·上海·徐汇区宜山路889号3号楼 邮编: 200233 t HL (86-21) 61402594 f HL (86-21)61156899 sgs.china@sgs.com

Member of the SGS Group (SGS SA)

Elements Testing Flow Chart

These samples were dissolved totally by pre-conditioning method according to below flow chart.

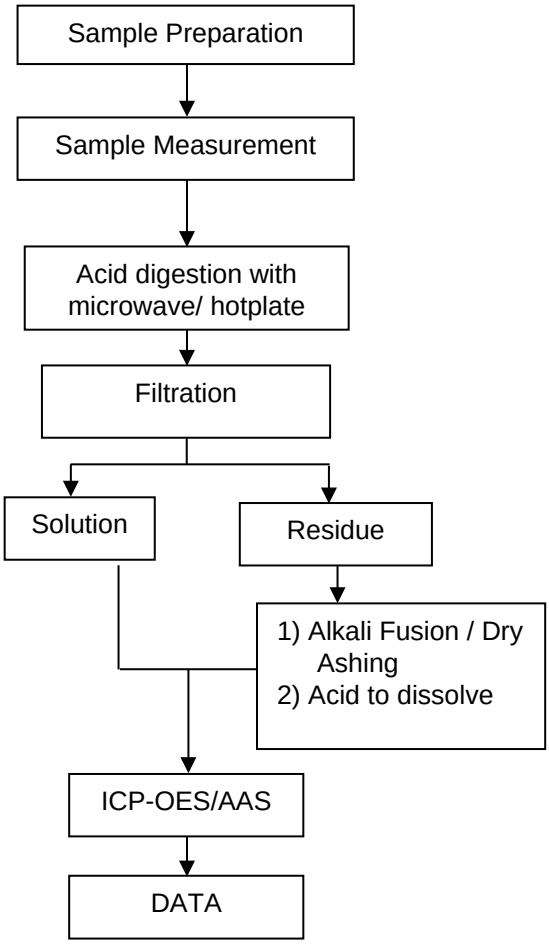

Unless otherwise agreed in writing, this document is issued by the Company subject to its General Conditions of Service printed overleaf, available on request or accessible at https://www.sgs.com/en/Terms-and-Conditions. Attention is drawn to the limitation of liability, indemnification and jurisdiction issues defined therein. Any holder of this document is advised that information contained hereon reflects the Company's findings at the time of its intervention only and within the limits of Client's instructions, if any. The Company's sole responsibility is to its Client and this document does not exonerate parties to a transaction from exercising all their rights and obligations under the transaction documents. This document cannot be reproduced except in full, without prior written approval of the Company. Any unauthorized alteration, forgery or falsification of the content or appearance of this document is unlawful and offenders may be prosecuted to the fullest extent of the law. Unless otherwise stated the results shown in this test report refer only to the sample(s) tested.
Attention: To check the authenticity of testing /inspection report & certificate, please contact us at telephone: (86-755) 8307 1443, or email: CN.Doccheck@sgs.com

3rd Building,No.889 Yishan Road Xuhui District,Shanghai China 200233 t E&E (86-21) 61402553 f E&E (86-21)64953679 www.sgsgroup.com.cn
中国·上海·徐汇区宜山路889号3号楼 邮编: 200233 t HL (86-21) 61402594 f HL (86-21)61156899 sgs.china@sgs.com

ATTACHMENTS

Hexavalent Chromium (Cr(VI)) Testing Flow Chart

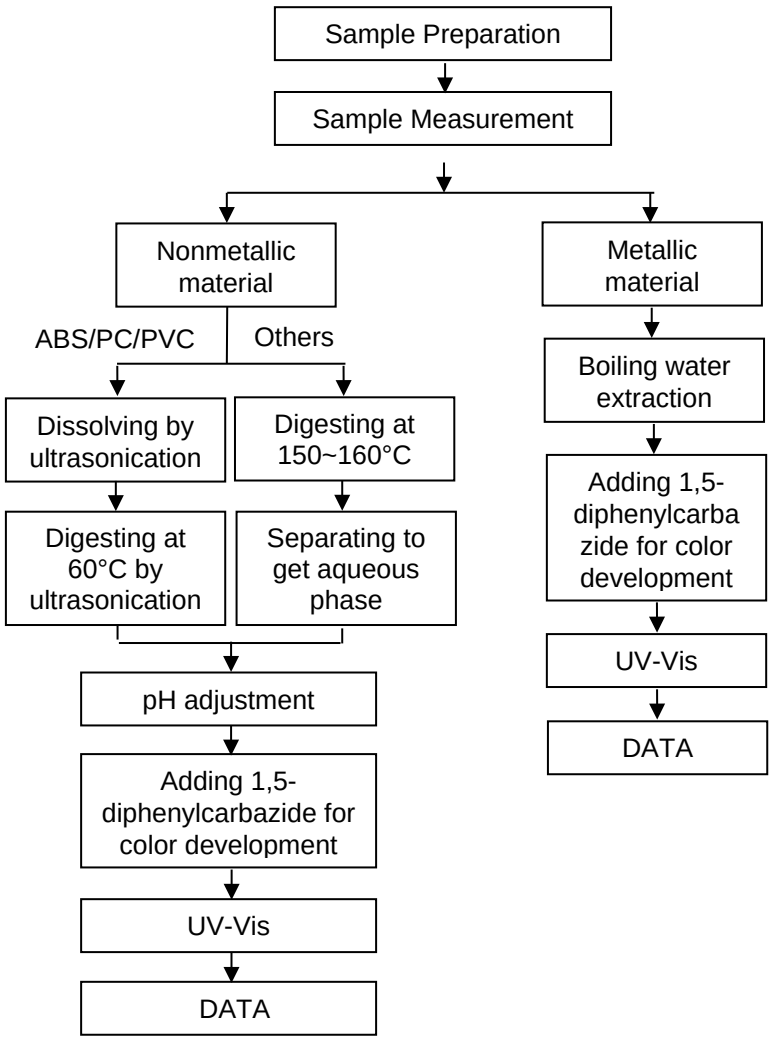

Unless otherwise agreed in writing, this document is issued by the Company subject to its General Conditions of Service printed overleaf, available on request or accessible at https://www.sgs.com/en/Terms-and-Conditions. Attention is drawn to the limitation of liability, indemnification and jurisdiction issues defined therein. Any holder of this document is advised that information contained hereon reflects the Company's findings at the time of its intervention only and within the limits of Client's instructions, if any. The Company's sole responsibility is to its Client and this document does not exonerate parties to a transaction from exercising all their rights and obligations under the transaction documents. This document cannot be reproduced except in full, without prior written approval of the Company. Any unauthorized alteration, forgery or falsification of the content or appearance of this document is unlawful and offenders may be prosecuted to the fullest extent of the law. Unless otherwise stated the results shown in this test report refer only to the sample(s) tested.
Attention: To check the authenticity of testing /inspection report & certificate, please contact us at telephone: (86-755) 8307 1443, or email: CN.Doccheck@sgs.com

3rd Building,No.889 Yishan Road Xuhui District,Shanghai China 200233 t E&E (86-21) 61402553 f E&E (86-21)64953679 www.sgsgroup.com.cn
中国·上海·徐汇区宜山路889号3号楼 邮编: 200233 t HL (86-21) 61402594 f HL (86-21)61156899 sgs.china@sgs.com

ATTACHMENTS

PBB/PBDE/Phthalates Testing Flow Chart

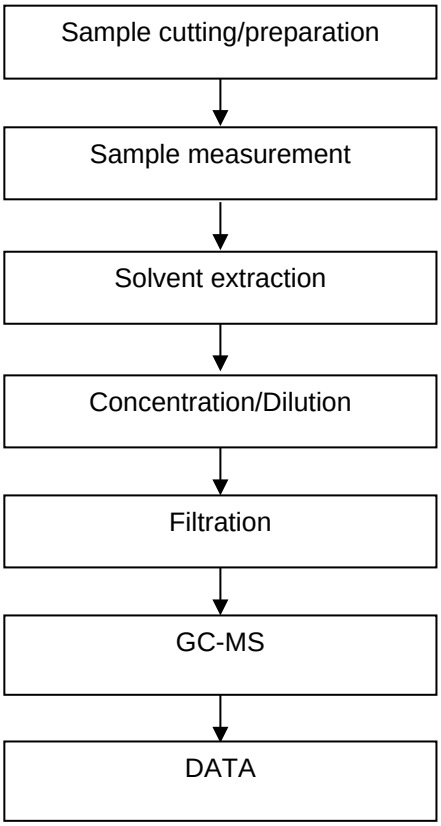

Unless otherwise agreed in writing, this document is issued by the Company subject to its General Conditions of Service printed overleaf, available on request or accessible at https://www.sgs.com/en/Terms-and-Conditions. Attention is drawn to the limitation of liability, indemnification and jurisdiction issues defined therein. Any holder of this document is advised that information contained hereon reflects the Company's findings at the time of its intervention only and within the limits of Client's instructions, if any. The Company's sole responsibility is to its Client and this document does not exonerate parties to a transaction from exercising all their rights and obligations under the transaction documents. This document cannot be reproduced except in full, without prior written approval of the Company. Any unauthorized alteration, forgery or falsification of the content or appearance of this document is unlawful and offenders may be prosecuted to the fullest extent of the law. Unless otherwise stated the results shown in this test report refer only to the sample(s) tested.
Attention: To check the authenticity of testing /inspection report & certificate, please contact us at telephone: (86-755) 8307 1443, or email: CN.Doccheck@sgs.com

3rd Building,No.889 Yishan Road Xuhui District,Shanghai China 200233 t E&E (86-21) 61402553 f E&E (86-21)64953679 www.sgsgroup.com.cn
中国·上海·徐汇区宜山路889号3号楼 邮编: 200233 t HL (86-21) 61402594 f HL (86-21)61156899 sgs.china@sgs.com

Member of the SGS Group (SGS SA)

ATTACHMENTS

Elements Testing Flow Chart

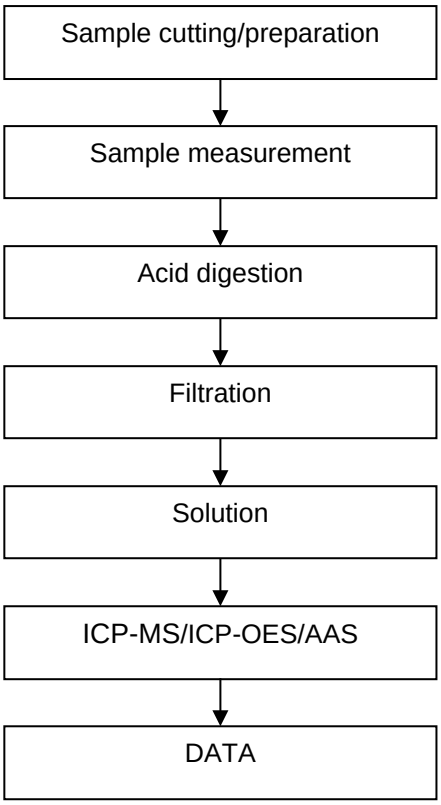

Unless otherwise agreed in writing, this document is issued by the Company subject to its General Conditions of Service printed overleaf, available on request or accessible at https://www.sgs.com/en/Terms-and-Conditions. Attention is drawn to the limitation of liability, indemnification and jurisdiction issues defined therein. Any holder of this document is advised that information contained hereon reflects the Company's findings at the time of its intervention only and within the limits of Client's instructions, if any. The Company's sole responsibility is to its Client and this document does not exonerate parties to a transaction from exercising all their rights and obligations under the transaction documents. This document cannot be reproduced except in full, without prior written approval of the Company. Any unauthorized alteration, forgery or falsification of the content or appearance of this document is unlawful and offenders may be prosecuted to the fullest extent of the law. Unless otherwise stated the results shown in this test report refer only to the sample(s) tested.
Attention: To check the authenticity of testing /inspection report & certificate, please contact us at telephone: (86-755) 8307 1443, or email: CN.Doccheck@sgs.com

3rd Building,No.889 Yishan Road Xuhui District,Shanghai China 200233 t E&E (86-21) 61402553 f E&E (86-21)64953679 www.sgsgroup.com.cn
中国·上海·徐汇区宜山路889号3号楼 邮编: 200233 t HL (86-21) 61402594 f HL (86-21)61156899 sgs.china@sgs.com

ATTACHMENTS

Halogen Testing Flow Chart

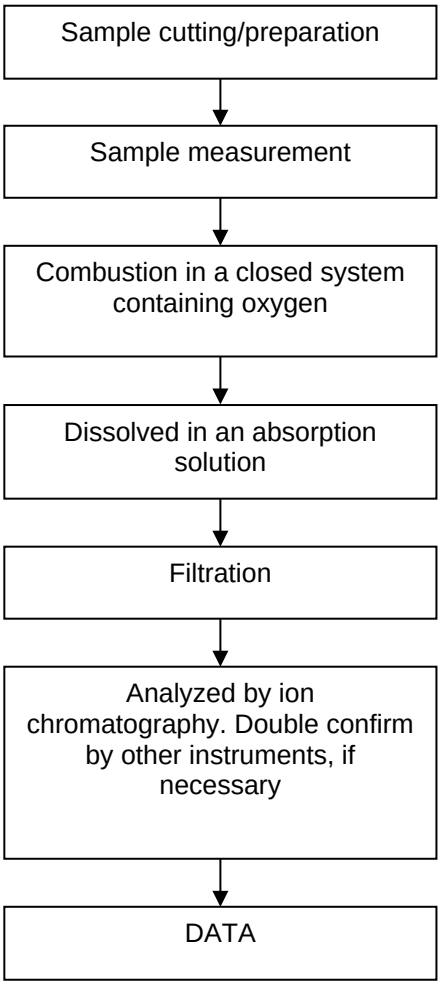

Unless otherwise agreed in writing, this document is issued by the Company subject to its General Conditions of Service printed overleaf, available on request or accessible at https://www.sgs.com/en/Terms-and-Conditions. Attention is drawn to the limitation of liability, indemnification and jurisdiction issues defined therein. Any holder of this document is advised that information contained hereon reflects the Company's findings at the time of its intervention only and within the limits of Client's instructions, if any. The Company's sole responsibility is to its Client and this document does not exonerate parties to a transaction from exercising all their rights and obligations under the transaction documents. This document cannot be reproduced except in full, without prior written approval of the Company. Any unauthorized alteration, forgery or falsification of the content or appearance of this document is unlawful and offenders may be prosecuted to the fullest extent of the law. Unless otherwise stated the results shown in this test report refer only to the sample(s) tested.
Attention: To check the authenticity of testing /inspection report & certificate, please contact us at telephone: (86-755) 8307 1443, or email: CN.Doccheck@sgs.com

3rd Building,No.889 Yishan Road Xuhui District,Shanghai China 200233 t E&E (86-21) 61402553 f E&E (86-21)64953679 www.sgsgroup.com.cn
中国·上海·徐汇区宜山路889号3号楼 邮编: 200233 t HL (86-21) 61402594 f HL (86-21)61156899 sgs.china@sgs.com

Sample Photo:



SHA25-0113885-0001.C005

SGS authenticate the photo on original report only

*** End of Report ***

Unless otherwise agreed in writing, this document is issued by the Company subject to its General Conditions of Service printed overleaf, available on request or accessible at https://www.sgs.com/en/Terms-and-Conditions. Attention is drawn to the limitation of liability, indemnification and jurisdiction issues defined therein. Any holder of this document is advised that information contained hereon reflects the Company's findings at the time of its intervention only and within the limits of Client's instructions, if any. The Company's sole responsibility is to its Client and this document does not exonerate parties to a transaction from exercising all their rights and obligations under the transaction documents. This document cannot be reproduced except in full, without prior written approval of the Company. Any unauthorized alteration, forgery or falsification of the content or appearance of this document is unlawful and offenders may be prosecuted to the fullest extent of the law. Unless otherwise stated the results shown in this test report refer only to the sample(s) tested.
Attention: To check the authenticity of testing /inspection report & certificate, please contact us at telephone: (86-755) 8307 1443, or email: CN.Doccheck@sgs.com

3rd Building,No.889 Yishan Road Xuhui District,Shanghai China 200233 t E&E (86-21) 61402553 f E&E (86-21)64953679 www.sgsgroup.com.cn
中国·上海·徐汇区宜山路889号3号楼 邮编: 200233 t HL (86-21) 61402594 f HL (86-21)61156899 sgs.china@sgs.com

Test Report

No.: SHAEC25011351113 **Date:** May 26, 2025

Client Name: P-TWO ELECTRIC TECHNOLOGY (SUZHOU) CO., LTD. / P-TWO INDUSTRIES INC.

Client Address: NO 158-86 Huashan RD., Fengqiao Industrial Park, New District Suzhou, Jiangsu, China

Sample Name: Phosphor Bronze

Model No.: C5210 Half Gold/Matte Tin Over Nickel Plated

Material: C5210

The above sample(s) and information were provided by the client.

SGS Job No.: SHP25-015790

Sample Receiving Date: May 16, 2025

Testing Period: May 16, 2025 ~ May 26, 2025

Test Requested: Select test(s) as requested by the client.

Test Method(s): Please refer to next page(s).

Test Result(s): Please refer to next page(s).

Test Requirement	Conclusion
EU RoHS Directive (EU) 2015/863 amending Annex II to Directive 2011/65/EU- Lead, Mercury, Cadmium and Hexavalent chromium	Pass
Element(s)	See Results

Signed for and on behalf of
SGS-CSTC Standards Technical Services (Shanghai) Co., Ltd.

Jenny Lan
Approved Signatory

Scan to see the report

D8BB19DD

Unless otherwise agreed in writing, this document is issued by the Company subject to its General Conditions of Service printed overleaf, available on request or accessible at https://www.sgs.com/en/Terms-and-Conditions. Attention is drawn to the limitation of liability, indemnification and jurisdiction issues defined therein. Any holder of this document is advised that information contained hereon reflects the Company's findings at the time of its intervention only and within the limits of Client's instructions, if any. The Company's sole responsibility is to its Client and this document does not exonerate parties to a transaction from exercising all their rights and obligations under the transaction documents. This document cannot be reproduced except in full, without prior written approval of the Company. Any unauthorized alteration, forgery or falsification of the content or appearance of this document is unlawful and offenders may be prosecuted to the fullest extent of the law. Unless otherwise stated the results shown in this test report refer only to the sample(s) tested.
Attention: To check the authenticity of testing /inspection report & certificate, please contact us at telephone: (86-755) 8307 1443, or email: CN.Doccheck@sgs.com

3rd Building,No.889 Yishan Road Xuhui District,Shanghai China 200233 t E&E (86-21) 61402553 f E&E (86-21)64953679 www.sgsgroup.com.cn
中国·上海·徐汇区宜山路889号3号楼 邮编: 200233 t HL (86-21) 61402594 f HL (86-21)61156899 sgs.china@sgs.com

Test Result(s):

Test Part Description：

SN ID	Sample No.	SGS Sample ID	Description
SN1	A19	SHA25-0113511-0001.C019	Silvery metal
SN2	A20	SHA25-0113511-0001.C020	Golden/Silvery plating
SN3	A21	SHA25-0113511-0001.C021	Silvery metal with silvery/golden plating

Remarks:

(1) 1 mg/kg = 1 ppm = 0.0001%
(2) MDL = Method Detection Limit
(3) ND = Not Detected (< MDL)
(4) "-" = Not Regulated

EU RoHS Directive (EU) 2015/863 amending Annex II to Directive 2011/65/EU- Lead, Mercury, Cadmium and Hexavalent chromium

Test Method: With reference to IEC 62321-4:2013+AMD1:2017, IEC 62321-5:2013 and IEC 62321-7-1:2015, analysis was performed by ICP-OES/AAS and UV-Vis.

Test Item(s)	Limit	Unit(s)	MDL	A20
Lead (Pb)	1000	mg/kg	10	20*
Mercury (Hg)	1000	mg/kg	10	ND*
Cadmium(Cd)	100	mg/kg	10	ND*
Hexavalent Chromium (Cr(VI))▼	-	μg/cm²	0.10	ND

Notes:

(1) The maximum permissible limit is quoted from RoHS Directive (EU) 2015/863.
(2) IEC 62321 series is equivalent to EN 62321 series.
(3) ▼ =
a. The sample is positive for Cr(VI) if the Cr(VI)concentration is greater than 0.13 μg/cm². The sample coating is considered to contain Cr(VI).
b. The sample is negative for Cr(VI) if Cr(VI) is ND (concentration less than 0.10 μg/cm²). The coating is considered a non-Cr(VI) based coating.
c. The result between 0.10 μg/cm² and 0.13 μg/cm² is considered to be inconclusive-unavoidable coating variations may influence the determination.

Information on storage conditions and production date of the tested sample is unavailable and thus Cr(VI) results represent status of the sample at the time of testing.
(4) *The reported result is for reference only.

Test Method: With reference to IEC 62321-4:2013+AMD1:2017, IEC 62321-5:2013 and IEC 62321-7-1:2015, analysis was performed by ICP-OES/AAS and UV-Vis.

Test Item(s)	Limit	Unit(s)	MDL	A19
Lead (Pb)	1000	mg/kg	2	7
Mercury (Hg)	1000	mg/kg	2	ND
Cadmium (Cd)	100	mg/kg	2	ND
Hexavalent Chromium (Cr(VI))▼	-	μg/cm²	0.10	ND

Unless otherwise agreed in writing, this document is issued by the Company subject to its General Conditions of Service printed overleaf, available on request or accessible at https://www.sgs.com/en/Terms-and-Conditions. Attention is drawn to the limitation of liability, indemnification and jurisdiction issues defined therein. Any holder of this document is advised that information contained hereon reflects the Company's findings at the time of its intervention only and within the limits of Client's instructions, if any. The Company's sole responsibility is to its Client and this document does not exonerate parties to a transaction from exercising all their rights and obligations under the transaction documents. This document cannot be reproduced except in full, without prior written approval of the Company. Any unauthorized alteration, forgery or falsification of the content or appearance of this document is unlawful and offenders may be prosecuted to the fullest extent of the law. Unless otherwise stated the results shown in this test report refer only to the sample(s) tested.
Attention: To check the authenticity of testing /inspection report & certificate, please contact us at telephone: (86-755) 8307 1443, or email: CN.Doccheck@sgs.com

3rd Building,No.889 Yishan Road Xuhui District,Shanghai China 200233 t E&E (86-21) 61402553 f E&E (86-21)64953679 www.sgsgroup.com.cn
中国·上海·徐汇区宜山路889号3号楼 邮编: 200233 t HL (86-21) 61402594 f HL (86-21)61156899 sgs.china@sgs.com

Member of the SGS Group (SGS SA)

Notes:

(1) The maximum permissible limit is quoted from RoHS Directive (EU) 2015/863.

(2) IEC 62321 series is equivalent to EN 62321 series.

(3) ▼ =
a. The sample is positive for Cr(VI) if the Cr(VI)concentration is greater than 0.13 μg/cm^2. The sample coating is considered to contain Cr(VI).
b. The sample is negative for Cr(VI) if Cr(VI) is ND (concentration less than 0.10 μg/cm^2). The coating is considered a non-Cr(VI) based coating.
c. The result between 0.10 μg/cm^2 and 0.13 μg/cm^2 is considered to be inconclusive-unavoidable coating variations may influence the determination.

Information on storage conditions and production date of the tested sample is unavailable and thus Cr(VI) results represent status of the sample at the time of testing.

Element(s)

Test Method: With reference to US EPA 3050B:1996, analysis was performed by ICP-OES/AAS.

Test Item(s)	Unit(s)	MDL	A21
Beryllium(Be)	mg/kg	5	ND

Unless otherwise stated, the decision rule for conformity reporting is based on Binary Statement for Simple Acceptance Rule (*w*=0) stated in ILAC-G8:09/2019.

Unless otherwise agreed in writing, this document is issued by the Company subject to its General Conditions of Service printed overleaf, available on request or accessible at https://www.sgs.com/en/Terms-and-Conditions. Attention is drawn to the limitation of liability, indemnification and jurisdiction issues defined therein. Any holder of this document is advised that information contained hereon reflects the Company's findings at the time of its intervention only and within the limits of Client's instructions, if any. The Company's sole responsibility is to its Client and this document does not exonerate parties to a transaction from exercising all their rights and obligations under the transaction documents. This document cannot be reproduced except in full, without prior written approval of the Company. Any unauthorized alteration, forgery or falsification of the content or appearance of this document is unlawful and offenders may be prosecuted to the fullest extent of the law. Unless otherwise stated the results shown in this test report refer only to the sample(s) tested.
Attention: To check the authenticity of testing /inspection report & certificate, please contact us at telephone: (86-755) 8307 1443, or email: CN.Doccheck@sgs.com

3rd Building,No.889 Yishan Road Xuhui District,Shanghai China 200233 t E&E (86-21) 61402553 f E&E (86-21)64953679 www.sgsgroup.com.cn
中国·上海·徐汇区宜山路889号3号楼 邮编: 200233 t HL (86-21) 61402594 f HL (86-21)61156899 sgs.china@sgs.com

ATTACHMENTS

Plating Element Testing Flow Chart

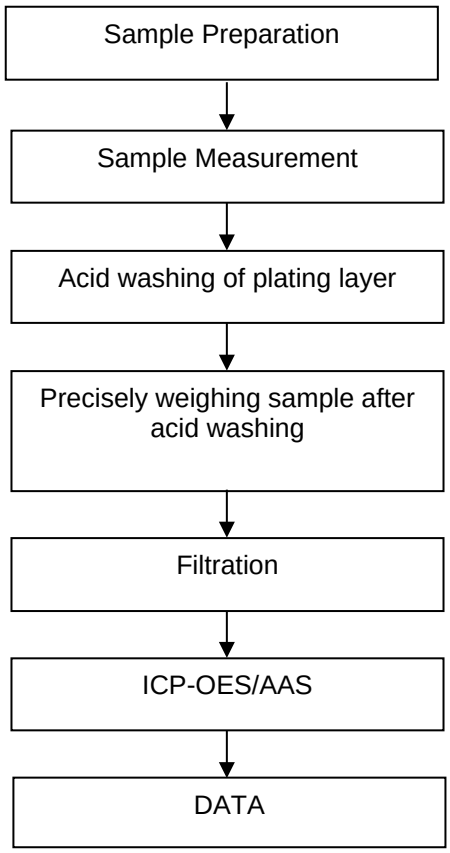

Unless otherwise agreed in writing, this document is issued by the Company subject to its General Conditions of Service printed overleaf, available on request or accessible at https://www.sgs.com/en/Terms-and-Conditions. Attention is drawn to the limitation of liability, indemnification and jurisdiction issues defined therein. Any holder of this document is advised that information contained hereon reflects the Company's findings at the time of its intervention only and within the limits of Client's instructions, if any. The Company's sole responsibility is to its Client and this document does not exonerate parties to a transaction from exercising all their rights and obligations under the transaction documents. This document cannot be reproduced except in full, without prior written approval of the Company. Any unauthorized alteration, forgery or falsification of the content or appearance of this document is unlawful and offenders may be prosecuted to the fullest extent of the law. Unless otherwise stated the results shown in this test report refer only to the sample(s) tested.
Attention: To check the authenticity of testing /inspection report & certificate, please contact us at telephone: (86-755) 8307 1443, or email: CN.Doccheck@sgs.com

3rd Building,No.889 Yishan Road Xuhui District,Shanghai China 200233 t E&E (86-21) 61402553 f E&E (86-21)64953679 www.sgsgroup.com.cn
中国·上海·徐汇区宜山路889号3号楼 邮编: 200233 t HL (86-21) 61402594 f HL (86-21)61156899 sgs.china@sgs.com

ATTACHMENTS

Hexavalent Chromium (Cr(VI)) Testing Flow Chart

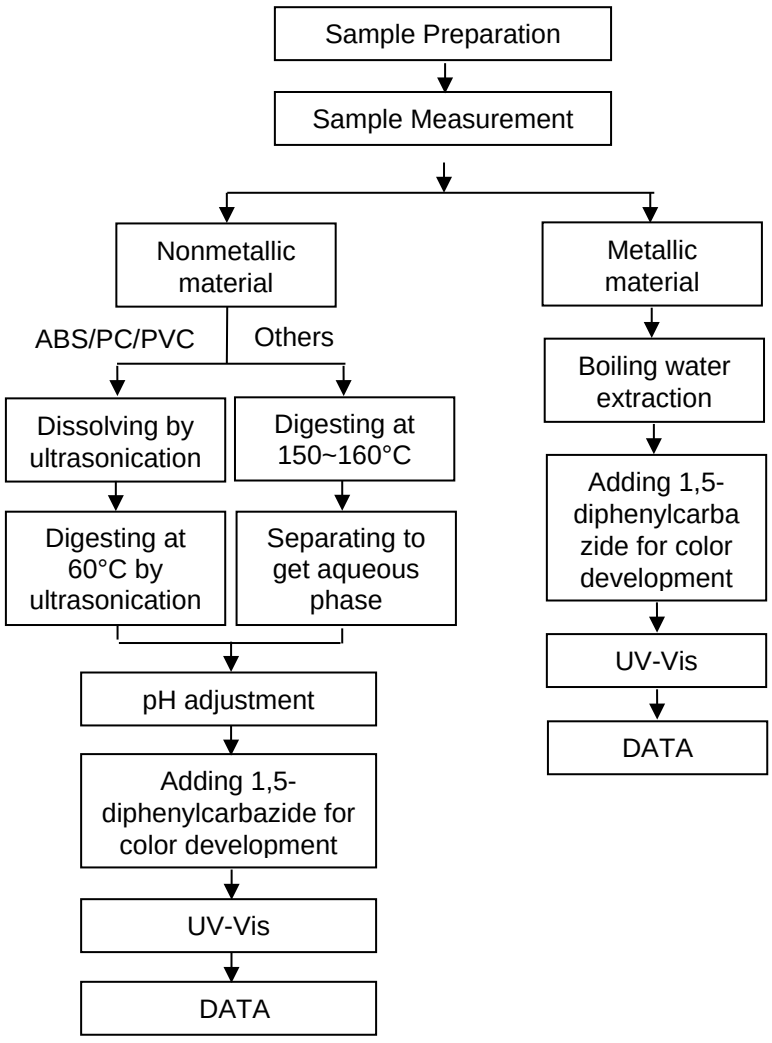

Unless otherwise agreed in writing, this document is issued by the Company subject to its General Conditions of Service printed overleaf, available on request or accessible at https://www.sgs.com/en/Terms-and-Conditions. Attention is drawn to the limitation of liability, indemnification and jurisdiction issues defined therein. Any holder of this document is advised that information contained hereon reflects the Company's findings at the time of its intervention only and within the limits of Client's instructions, if any. The Company's sole responsibility is to its Client and this document does not exonerate parties to a transaction from exercising all their rights and obligations under the transaction documents. This document cannot be reproduced except in full, without prior written approval of the Company. Any unauthorized alteration, forgery or falsification of the content or appearance of this document is unlawful and offenders may be prosecuted to the fullest extent of the law. Unless otherwise stated the results shown in this test report refer only to the sample(s) tested.
Attention: To check the authenticity of testing /inspection report & certificate, please contact us at telephone: (86-755) 8307 1443, or email: CN.Doccheck@sgs.com

3rd Building,No.889 Yishan Road Xuhui District,Shanghai China 200233 t E&E (86-21) 61402553 f E&E (86-21)64953679 www.sgsgroup.com.cn
中国·上海·徐汇区宜山路889号3号楼 邮编: 200233 t HL (86-21) 61402594 f HL (86-21)61156899 sgs.china@sgs.com

ATTACHMENTS

Elements Testing Flow Chart

These samples were dissolved totally by pre-conditioning method according to below flow chart.

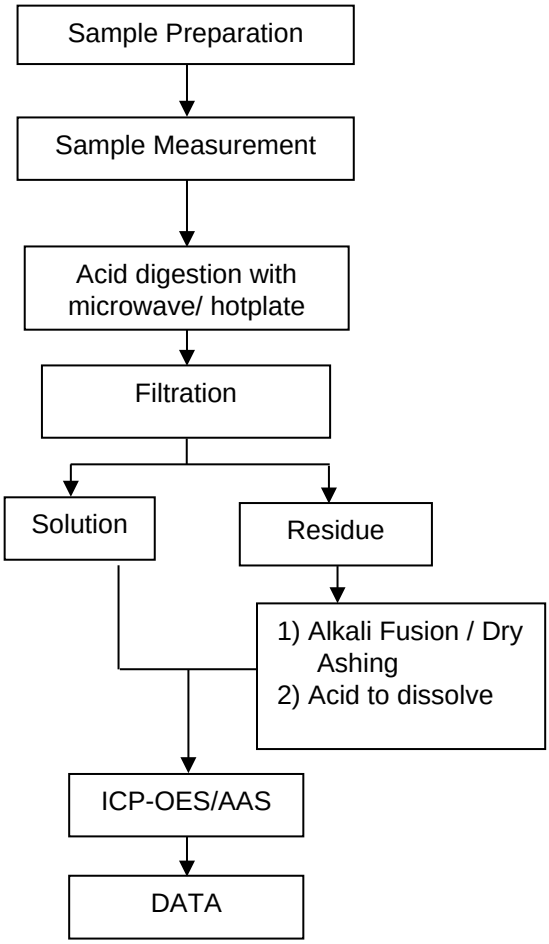

Unless otherwise agreed in writing, this document is issued by the Company subject to its General Conditions of Service printed overleaf, available on request or accessible at https://www.sgs.com/en/Terms-and-Conditions. Attention is drawn to the limitation of liability, indemnification and jurisdiction issues defined therein. Any holder of this document is advised that information contained hereon reflects the Company's findings at the time of its intervention only and within the limits of Client's instructions, if any. The Company's sole responsibility is to its Client and this document does not exonerate parties to a transaction from exercising all their rights and obligations under the transaction documents. This document cannot be reproduced except in full, without prior written approval of the Company. Any unauthorized alteration, forgery or falsification of the content or appearance of this document is unlawful and offenders may be prosecuted to the fullest extent of the law. Unless otherwise stated the results shown in this test report refer only to the sample(s) tested.
Attention: To check the authenticity of testing /inspection report & certificate, please contact us at telephone: (86-755) 8307 1443, or email: CN.Doccheck@sgs.com

3rd Building,No.889 Yishan Road Xuhui District,Shanghai China 200233 t E&E (86-21) 61402553 f E&E (86-21)64953679 www.sgsgroup.com.cn
中国·上海·徐汇区宜山路889号3号楼 邮编: 200233 t HL (86-21) 61402594 f HL (86-21)61156899 sgs.china@sgs.com

ATTACHMENTS

Elements Testing Flow Chart

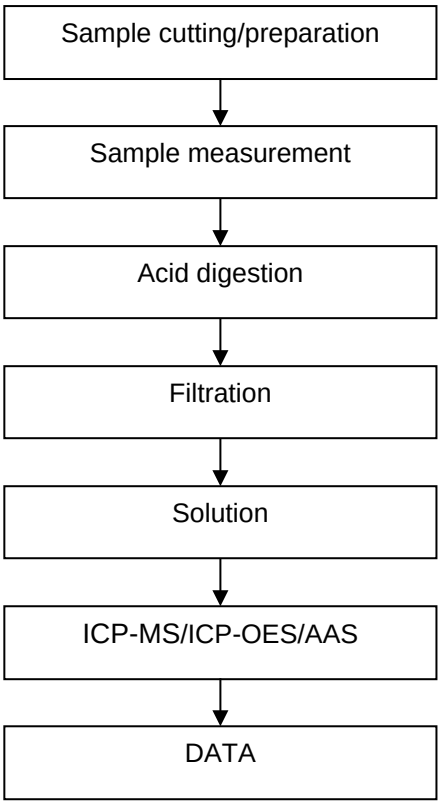

Unless otherwise agreed in writing, this document is issued by the Company subject to its General Conditions of Service printed overleaf, available on request or accessible at https://www.sgs.com/en/Terms-and-Conditions. Attention is drawn to the limitation of liability, indemnification and jurisdiction issues defined therein. Any holder of this document is advised that information contained hereon reflects the Company's findings at the time of its intervention only and within the limits of Client's instructions, if any. The Company's sole responsibility is to its Client and this document does not exonerate parties to a transaction from exercising all their rights and obligations under the transaction documents. This document cannot be reproduced except in full, without prior written approval of the Company. Any unauthorized alteration, forgery or falsification of the content or appearance of this document is unlawful and offenders may be prosecuted to the fullest extent of the law. Unless otherwise stated the results shown in this test report refer only to the sample(s) tested.
Attention: To check the authenticity of testing /inspection report & certificate, please contact us at telephone: (86-755) 8307 1443, or email: CN.Doccheck@sgs.com

3rd Building,No.889 Yishan Road Xuhui District,Shanghai China 200233 t E&E (86-21) 61402553 f E&E (86-21)64953679 www.sgsgroup.com.cn
中国·上海·徐汇区宜山路889号3号楼 邮编: 200233 t HL (86-21) 61402594 f HL (86-21)61156899 sgs.china@sgs.com

Sample Photo:

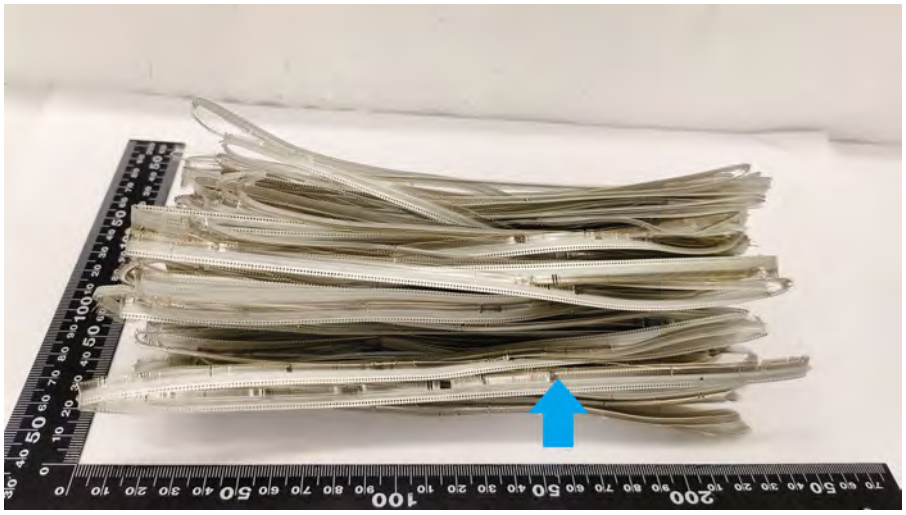

SHA25-0113511-0001.C019

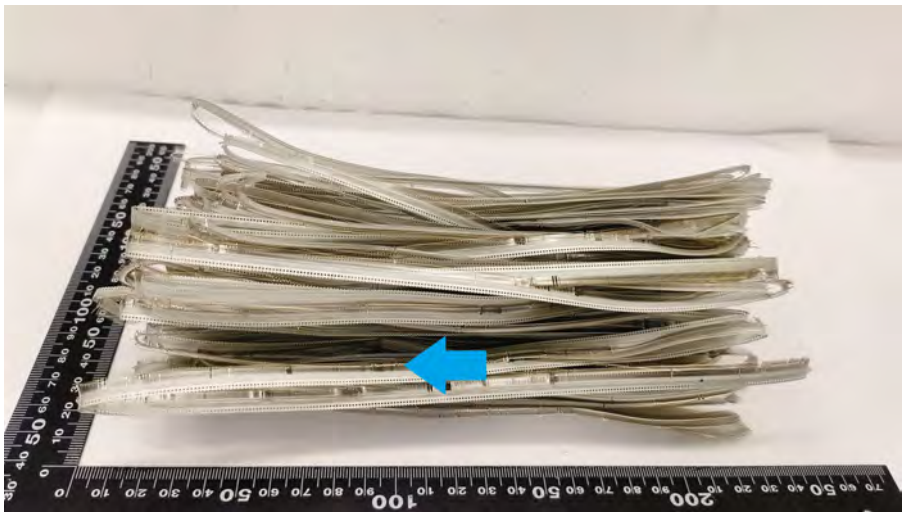

SHA25-0113511-0001.C020

Unless otherwise agreed in writing, this document is issued by the Company subject to its General Conditions of Service printed overleaf, available on request or accessible at https://www.sgs.com/en/Terms-and-Conditions. Attention is drawn to the limitation of liability, indemnification and jurisdiction issues defined therein. Any holder of this document is advised that information contained hereon reflects the Company's findings at the time of its intervention only and within the limits of Client's instructions, if any. The Company's sole responsibility is to its Client and this document does not exonerate parties to a transaction from exercising all their rights and obligations under the transaction documents. This document cannot be reproduced except in full, without prior written approval of the Company. Any unauthorized alteration, forgery or falsification of the content or appearance of this document is unlawful and offenders may be prosecuted to the fullest extent of the law. Unless otherwise stated the results shown in this test report refer only to the sample(s) tested.
Attention: To check the authenticity of testing /inspection report & certificate, please contact us at telephone: (86-755) 8307 1443, or email: CN.Doccheck@sgs.com

3rd Building,No.889 Yishan Road Xuhui District,Shanghai China 200233 t E&E (86-21) 61402553 f E&E (86-21)64953679 www.sgsgroup.com.cn
中国·上海·徐汇区宜山路889号3号楼 邮编: 200233 t HL (86-21) 61402594 f HL (86-21)61156899 sgs.china@sgs.com

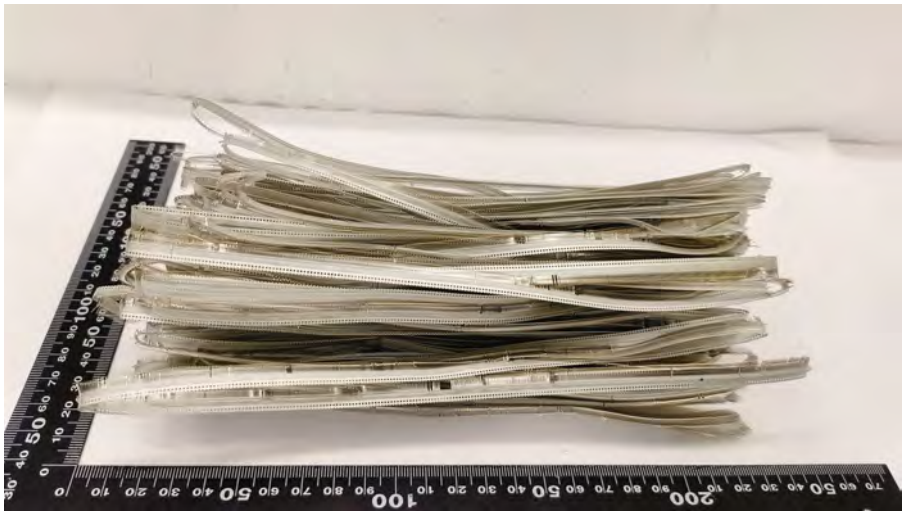

SHA25-0113511-0001.C021

SGS authenticate the photo on original report only

*** End of Report ***

Unless otherwise agreed in writing, this document is issued by the Company subject to its General Conditions of Service printed overleaf, available on request or accessible at https://www.sgs.com/en/Terms-and-Conditions. Attention is drawn to the limitation of liability, indemnification and jurisdiction issues defined therein. Any holder of this document is advised that information contained hereon reflects the Company's findings at the time of its intervention only and within the limits of Client's instructions, if any. The Company's sole responsibility is to its Client and this document does not exonerate parties to a transaction from exercising all their rights and obligations under the transaction documents. This document cannot be reproduced except in full, without prior written approval of the Company. Any unauthorized alteration, forgery or falsification of the content or appearance of this document is unlawful and offenders may be prosecuted to the fullest extent of the law. Unless otherwise stated the results shown in this test report refer only to the sample(s) tested.
Attention: To check the authenticity of testing /inspection report & certificate, please contact us at telephone: (86-755) 8307 1443, or email: CN.Doccheck@sgs.com

3rd Building,No.889 Yishan Road Xuhui District,Shanghai China 200233 t E&E (86-21) 61402553 f E&E (86-21)64953679 www.sgsgroup.com.cn
中国·上海·徐汇区宜山路889号3号楼 邮编: 200233 t HL (86-21) 61402594 f HL (86-21)61156899 sgs.china@sgs.com

Test Report

No.: SHAEC25011351105 **Date:** May 26, 2025

Client Name: P-TWO ELECTRIC TECHNOLOGY (SUZHOU) CO., LTD. / P-TWO INDUSTRIES INC.

Client Address: NO 158-86 Huashan RD., Fengqiao Industrial Park, New District Suzhou, Jiangsu, China

Sample Name: Stainless Steel

Model No.: SUS304 Matte Tin/Nickel Plating

Material: SUS304

The above sample(s) and information were provided by the client.

SGS Job No.: SHP25-015790

Sample Receiving Date: May 16, 2025

Testing Period: May 16, 2025 ~ May 26, 2025

Test Requested: Select test(s) as requested by the client.

Test Method(s): Please refer to next page(s).

Test Result(s): Please refer to next page(s).

Test Requirement	Conclusion
EU RoHS Directive (EU) 2015/863 amending Annex II to Directive 2011/65/EU- Lead, Mercury, Cadmium and Hexavalent chromium	Pass
Element(s)	See Results

Signed for and on behalf of
SGS-CSTC Standards Technical Services (Shanghai) Co., Ltd.

Jenny Lan
Approved Signatory

Scan to see the report

A31AB213

Unless otherwise agreed in writing, this document is issued by the Company subject to its General Conditions of Service printed overleaf, available on request or accessible at https://www.sgs.com/en/Terms-and-Conditions. Attention is drawn to the limitation of liability, indemnification and jurisdiction issues defined therein. Any holder of this document is advised that information contained hereon reflects the Company's findings at the time of its intervention only and within the limits of Client's instructions, if any. The Company's sole responsibility is to its Client and this document does not exonerate parties to a transaction from exercising all their rights and obligations under the transaction documents. This document cannot be reproduced except in full, without prior written approval of the Company. Any unauthorized alteration, forgery or falsification of the content or appearance of this document is unlawful and offenders may be prosecuted to the fullest extent of the law. Unless otherwise stated the results shown in this test report refer only to the sample(s) tested.
Attention: To check the authenticity of testing /inspection report & certificate, please contact us at telephone: (86-755) 8307 1443, or email: CN.Doccheck@sgs.com

3rd Building,No.889 Yishan Road Xuhui District,Shanghai China 200233 t E&E (86-21) 61402553 f E&E (86-21)64953679 www.sgsgroup.com.cn
中国·上海·徐汇区宜山路889号3号楼 邮编: 200233 t HL (86-21) 61402594 f HL (86-21)61156899 sgs.china@sgs.com

Test Result(s):

Test Part Description：

SN ID	Sample No.	SGS Sample ID	Description
SN1	A7	SHA25-0113511-0001.C007	Silvery metal
SN2	A8	SHA25-0113511-0001.C008	Silvery plating
SN3	A9	SHA25-0113511-0001.C009	Silvery metal with silvery plating

Remarks:

(1) 1 mg/kg = 1 ppm = 0.0001%
(2) MDL = Method Detection Limit
(3) ND = Not Detected (< MDL)
(4) "-" = Not Regulated

EU RoHS Directive (EU) 2015/863 amending Annex II to Directive 2011/65/EU- Lead, Mercury, Cadmium and Hexavalent chromium

Test Method: With reference to IEC 62321-4:2013+AMD1:2017, IEC 62321-5:2013 and IEC 62321-7-1:2015, analysis was performed by ICP-OES/AAS and UV-Vis.

Test Item(s)	Limit	Unit(s)	MDL	A8
Lead (Pb)	1000	mg/kg	10	44
Mercury (Hg)	1000	mg/kg	10	ND
Cadmium(Cd)	100	mg/kg	10	ND
Hexavalent Chromium (Cr(VI))▼	-	μg/cm²	0.10	ND

Notes:

(1) The maximum permissible limit is quoted from RoHS Directive (EU) 2015/863.
(2) IEC 62321 series is equivalent to EN 62321 series.
(3) ▼ =
a. The sample is positive for Cr(VI) if the Cr(VI)concentration is greater than 0.13 μg/cm². The sample coating is considered to contain Cr(VI).
b. The sample is negative for Cr(VI) if Cr(VI) is ND (concentration less than 0.10 μg/cm²). The coating is considered a non-Cr(VI) based coating.
c. The result between 0.10 μg/cm² and 0.13 μg/cm² is considered to be inconclusive-unavoidable coating variations may influence the determination.

Information on storage conditions and production date of the tested sample is unavailable and thus Cr(VI) results represent status of the sample at the time of testing.

Test Method: With reference to IEC 62321-4:2013+AMD1:2017, IEC 62321-5:2013 and IEC 62321-7-1:2015, analysis was performed by ICP-OES/AAS and UV-Vis.

Test Item(s)	Limit	Unit(s)	MDL	A7
Lead (Pb)	1000	mg/kg	2	ND
Mercury (Hg)	1000	mg/kg	2	ND
Cadmium (Cd)	100	mg/kg	2	ND
Hexavalent Chromium (Cr(VI))▼	-	μg/cm²	0.10	ND

Unless otherwise agreed in writing, this document is issued by the Company subject to its General Conditions of Service printed overleaf, available on request or accessible at https://www.sgs.com/en/Terms-and-Conditions. Attention is drawn to the limitation of liability, indemnification and jurisdiction issues defined therein. Any holder of this document is advised that information contained hereon reflects the Company's findings at the time of its intervention only and within the limits of Client's instructions, if any. The Company's sole responsibility is to its Client and this document does not exonerate parties to a transaction from exercising all their rights and obligations under the transaction documents. This document cannot be reproduced except in full, without prior written approval of the Company. Any unauthorized alteration, forgery or falsification of the content or appearance of this document is unlawful and offenders may be prosecuted to the fullest extent of the law. Unless otherwise stated the results shown in this test report refer only to the sample(s) tested.
Attention: To check the authenticity of testing /inspection report & certificate, please contact us at telephone: (86-755) 8307 1443, or email: CN.Doccheck@sgs.com

3rd Building,No.889 Yishan Road Xuhui District,Shanghai China 200233 t E&E (86-21) 61402553 f E&E (86-21)64953679 www.sgsgroup.com.cn
中国·上海·徐汇区宜山路889号3号楼 邮编: 200233 t HL (86-21) 61402594 f HL (86-21)61156899 sgs.china@sgs.com

Member of the SGS Group (SGS SA)

Notes:

(1) The maximum permissible limit is quoted from RoHS Directive (EU) 2015/863.

(2) IEC 62321 series is equivalent to EN 62321 series.

(3) ▼ =
a. The sample is positive for Cr(VI) if the Cr(VI)concentration is greater than 0.13 μg/cm^2. The sample coating is considered to contain Cr(VI).
b. The sample is negative for Cr(VI) if Cr(VI) is ND (concentration less than 0.10 μg/cm^2). The coating is considered a non-Cr(VI) based coating.
c. The result between 0.10 μg/cm^2 and 0.13 μg/cm^2 is considered to be inconclusive-unavoidable coating variations may influence the determination.

Information on storage conditions and production date of the tested sample is unavailable and thus Cr(VI) results represent status of the sample at the time of testing.

Element(s)

Test Method: With reference to US EPA 3050B:1996, analysis was performed by ICP-OES/AAS.

Test Item(s)	Unit(s)	MDL	A9
Beryllium(Be)	mg/kg	5	ND

Unless otherwise stated, the decision rule for conformity reporting is based on Binary Statement for Simple Acceptance Rule (*w*=0) stated in ILAC-G8:09/2019.

Unless otherwise agreed in writing, this document is issued by the Company subject to its General Conditions of Service printed overleaf, available on request or accessible at https://www.sgs.com/en/Terms-and-Conditions. Attention is drawn to the limitation of liability, indemnification and jurisdiction issues defined therein. Any holder of this document is advised that information contained hereon reflects the Company's findings at the time of its intervention only and within the limits of Client's instructions, if any. The Company's sole responsibility is to its Client and this document does not exonerate parties to a transaction from exercising all their rights and obligations under the transaction documents. This document cannot be reproduced except in full, without prior written approval of the Company. Any unauthorized alteration, forgery or falsification of the content or appearance of this document is unlawful and offenders may be prosecuted to the fullest extent of the law. Unless otherwise stated the results shown in this test report refer only to the sample(s) tested.
Attention: To check the authenticity of testing /inspection report & certificate, please contact us at telephone: (86-755) 8307 1443, or email: CN.Doccheck@sgs.com

3rd Building,No.889 Yishan Road Xuhui District,Shanghai China 200233 t E&E (86-21) 61402553 f E&E (86-21)64953679 www.sgsgroup.com.cn
中国·上海·徐汇区宜山路889号3号楼 邮编: 200233 t HL (86-21) 61402594 f HL (86-21)61156899 sgs.china@sgs.com

ATTACHMENTS

Plating Element Testing Flow Chart

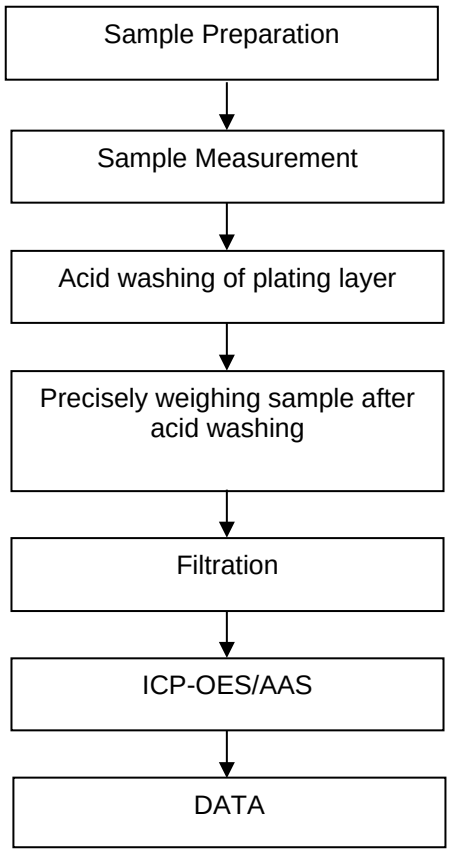

Unless otherwise agreed in writing, this document is issued by the Company subject to its General Conditions of Service printed overleaf, available on request or accessible at https://www.sgs.com/en/Terms-and-Conditions. Attention is drawn to the limitation of liability, indemnification and jurisdiction issues defined therein. Any holder of this document is advised that information contained hereon reflects the Company's findings at the time of its intervention only and within the limits of Client's instructions, if any. The Company's sole responsibility is to its Client and this document does not exonerate parties to a transaction from exercising all their rights and obligations under the transaction documents. This document cannot be reproduced except in full, without prior written approval of the Company. Any unauthorized alteration, forgery or falsification of the content or appearance of this document is unlawful and offenders may be prosecuted to the fullest extent of the law. Unless otherwise stated the results shown in this test report refer only to the sample(s) tested.
Attention: To check the authenticity of testing /inspection report & certificate, please contact us at telephone: (86-755) 8307 1443, or email: CN.Doccheck@sgs.com

3rd Building,No.889 Yishan Road Xuhui District,Shanghai China 200233 t E&E (86-21) 61402553 f E&E (86-21)64953679 www.sgsgroup.com.cn
中国·上海·徐汇区宜山路889号3号楼 邮编: 200233 t HL (86-21) 61402594 f HL (86-21)61156899 sgs.china@sgs.com

ATTACHMENTS

Hexavalent Chromium (Cr(VI)) Testing Flow Chart

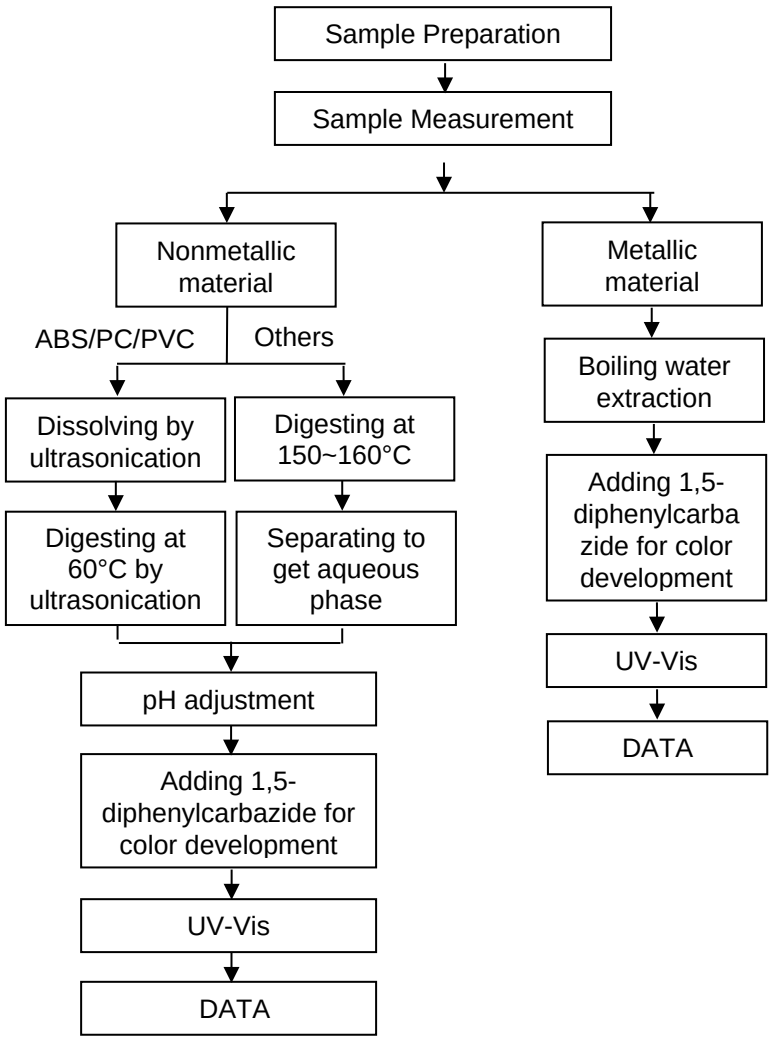

Unless otherwise agreed in writing, this document is issued by the Company subject to its General Conditions of Service printed overleaf, available on request or accessible at https://www.sgs.com/en/Terms-and-Conditions. Attention is drawn to the limitation of liability, indemnification and jurisdiction issues defined therein. Any holder of this document is advised that information contained hereon reflects the Company's findings at the time of its intervention only and within the limits of Client's instructions, if any. The Company's sole responsibility is to its Client and this document does not exonerate parties to a transaction from exercising all their rights and obligations under the transaction documents. This document cannot be reproduced except in full, without prior written approval of the Company. Any unauthorized alteration, forgery or falsification of the content or appearance of this document is unlawful and offenders may be prosecuted to the fullest extent of the law. Unless otherwise stated the results shown in this test report refer only to the sample(s) tested.
Attention: To check the authenticity of testing /inspection report & certificate, please contact us at telephone: (86-755) 8307 1443, or email: CN.Doccheck@sgs.com

3rd Building,No.889 Yishan Road Xuhui District,Shanghai China 200233 t E&E (86-21) 61402553 f E&E (86-21)64953679 www.sgsgroup.com.cn
中国·上海·徐汇区宜山路889号3号楼 邮编: 200233 t HL (86-21) 61402594 f HL (86-21)61156899 sgs.china@sgs.com

ATTACHMENTS

Elements Testing Flow Chart

These samples were dissolved totally by pre-conditioning method according to below flow chart.

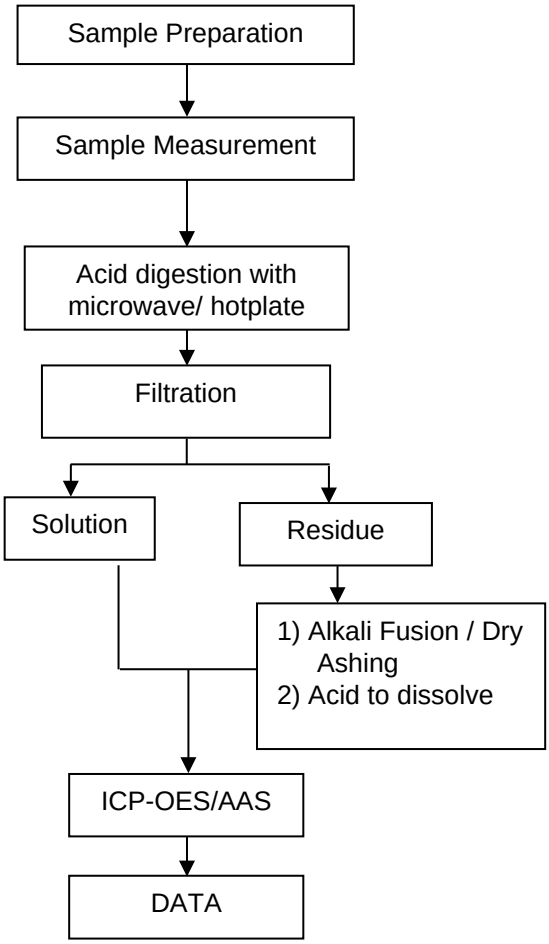

Unless otherwise agreed in writing, this document is issued by the Company subject to its General Conditions of Service printed overleaf, available on request or accessible at https://www.sgs.com/en/Terms-and-Conditions. Attention is drawn to the limitation of liability, indemnification and jurisdiction issues defined therein. Any holder of this document is advised that information contained hereon reflects the Company's findings at the time of its intervention only and within the limits of Client's instructions, if any. The Company's sole responsibility is to its Client and this document does not exonerate parties to a transaction from exercising all their rights and obligations under the transaction documents. This document cannot be reproduced except in full, without prior written approval of the Company. Any unauthorized alteration, forgery or falsification of the content or appearance of this document is unlawful and offenders may be prosecuted to the fullest extent of the law. Unless otherwise stated the results shown in this test report refer only to the sample(s) tested.
Attention: To check the authenticity of testing /inspection report & certificate, please contact us at telephone: (86-755) 8307 1443, or email: CN.Doccheck@sgs.com

3rd Building,No.889 Yishan Road Xuhui District,Shanghai China 200233 t E&E (86-21) 61402553 f E&E (86-21)64953679 www.sgsgroup.com.cn
中国·上海·徐汇区宜山路889号3号楼 邮编: 200233 t HL (86-21) 61402594 f HL (86-21)61156899 sgs.china@sgs.com

ATTACHMENTS

Elements Testing Flow Chart

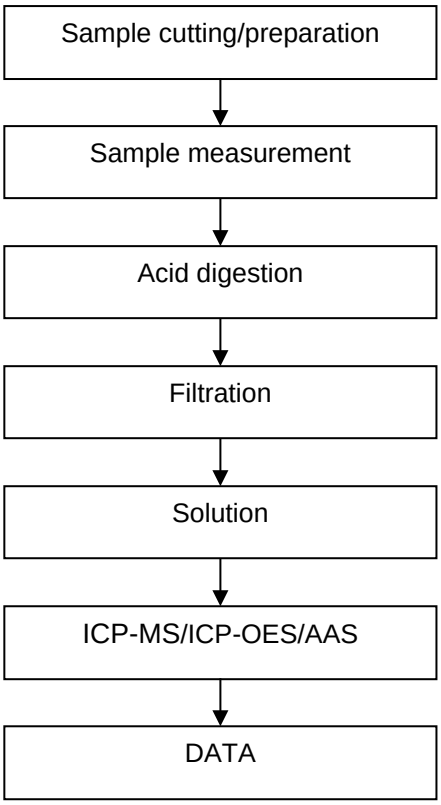

Unless otherwise agreed in writing, this document is issued by the Company subject to its General Conditions of Service printed overleaf, available on request or accessible at https://www.sgs.com/en/Terms-and-Conditions. Attention is drawn to the limitation of liability, indemnification and jurisdiction issues defined therein. Any holder of this document is advised that information contained hereon reflects the Company's findings at the time of its intervention only and within the limits of Client's instructions, if any. The Company's sole responsibility is to its Client and this document does not exonerate parties to a transaction from exercising all their rights and obligations under the transaction documents. This document cannot be reproduced except in full, without prior written approval of the Company. Any unauthorized alteration, forgery or falsification of the content or appearance of this document is unlawful and offenders may be prosecuted to the fullest extent of the law. Unless otherwise stated the results shown in this test report refer only to the sample(s) tested.
Attention: To check the authenticity of testing /inspection report & certificate, please contact us at telephone: (86-755) 8307 1443, or email: CN.Doccheck@sgs.com

3rd Building,No.889 Yishan Road Xuhui District,Shanghai China 200233 t E&E (86-21) 61402553 f E&E (86-21)64953679 www.sgsgroup.com.cn
中国·上海·徐汇区宜山路889号3号楼 邮编: 200233 t HL (86-21) 61402594 f HL (86-21)61156899 sgs.china@sgs.com

Sample Photo:



SHA25-0113511-0001.C007



SHA25-0113511-0001.C008

Unless otherwise agreed in writing, this document is issued by the Company subject to its General Conditions of Service printed overleaf, available on request or accessible at https://www.sgs.com/en/Terms-and-Conditions. Attention is drawn to the limitation of liability, indemnification and jurisdiction issues defined therein. Any holder of this document is advised that information contained hereon reflects the Company's findings at the time of its intervention only and within the limits of Client's instructions, if any. The Company's sole responsibility is to its Client and this document does not exonerate parties to a transaction from exercising all their rights and obligations under the transaction documents. This document cannot be reproduced except in full, without prior written approval of the Company. Any unauthorized alteration, forgery or falsification of the content or appearance of this document is unlawful and offenders may be prosecuted to the fullest extent of the law. Unless otherwise stated the results shown in this test report refer only to the sample(s) tested.
Attention: To check the authenticity of testing /inspection report & certificate, please contact us at telephone: (86-755) 8307 1443, or email: CN.Doccheck@sgs.com

3rd Building,No.889 Yishan Road Xuhui District,Shanghai China 200233 t E&E (86-21) 61402553 f E&E (86-21)64953679 www.sgsgroup.com.cn
中国·上海·徐汇区宜山路889号3号楼 邮编: 200233 t HL (86-21) 61402594 f HL (86-21)61156899 sgs.china@sgs.com



SHA25-0113511-0001.C009

SGS authenticate the photo on original report only

*** End of Report ***

Unless otherwise agreed in writing, this document is issued by the Company subject to its General Conditions of Service printed overleaf, available on request or accessible at https://www.sgs.com/en/Terms-and-Conditions. Attention is drawn to the limitation of liability, indemnification and jurisdiction issues defined therein. Any holder of this document is advised that information contained hereon reflects the Company's findings at the time of its intervention only and within the limits of Client's instructions, if any. The Company's sole responsibility is to its Client and this document does not exonerate parties to a transaction from exercising all their rights and obligations under the transaction documents. This document cannot be reproduced except in full, without prior written approval of the Company. Any unauthorized alteration, forgery or falsification of the content or appearance of this document is unlawful and offenders may be prosecuted to the fullest extent of the law. Unless otherwise stated the results shown in this test report refer only to the sample(s) tested.
Attention: To check the authenticity of testing /inspection report & certificate, please contact us at telephone: (86-755) 8307 1443, or email: CN.Doccheck@sgs.com

3rd Building,No.889 Yishan Road Xuhui District,Shanghai China 200233 t E&E (86-21) 61402553 f E&E (86-21)64953679 www.sgsgroup.com.cn
中国·上海·徐汇区宜山路889号3号楼 邮编: 200233 t HL (86-21) 61402594 f HL (86-21)61156899 sgs.china@sgs.com

Member of the SGS Group (SGS SA)

检测报告
Test Report

检测依据 Test Method

测试项目 Test Item(s)	测试方法 Test Method	测试仪器 Measured Equipment(s)
铅 Lead (Pb)	IEC 62321-5:2013	ICP-OES
镉 Cadmium (Cd)	IEC 62321-5:2013	ICP-OES
汞 Mercury (Hg)	IEC 62321-4:2013+AMD1:2017 CSV	ICP-OES
六价铬 Hexavalent Chromium (Cr(VI))	IEC 62321-7-1:2015	UV-Vis
铍 Beryllium(Be)	参考US EPA 3050B:1996 & US EPA 6010D:2018* Refer to US EPA 3050B:1996 & US EPA 6010D:2018*	ICP-OES

检测结果 Test Result(s)

测试项目 Tested Item(s)	**结果 Result**	**方法检出限 MDL**
	001	
铅 Lead (Pb)	N.D.	2 mg/kg
镉 Cadmium (Cd)	N.D.	2 mg/kg
汞 Mercury (Hg)	N.D.	2 mg/kg
六价铬 Hexavalent Chromium (Cr(VI))	N.D. ▼	0.10 μg/cm² (LOQ)

测试项目 Tested Item(s)	**结果 Result**	**方法检出限 MDL**
	001	
铍 Beryllium (Be)	N.D.	10 mg/kg

检测报告
Test Report

报告编号 A2240723274101001E
Report No. A2240723274101001E

报告抬头公司名称 達昌電子科技(蘇州)有限公司/禾昌興業股份有限公司
Company Name shown on Report P-TWO ELECTRIC TECHNOLOGY (SUZHOU) CO.,LTD.
地 址 蘇州新區楓橋工業園華山路158-86號
Address NO.158-86 HUASHAN RD,FENG QIAO INDUSTRIAL PARK,NEW DISTRICT SUZHOU,CHINA.

以下测试之样品及样品信息由申请者提供并确认
The following sample(s) and sample information was/were submitted and identified by/on the behalf of the applicant

样品名称	Stainless Steel
Sample Name	Stainless Steel
样品型号	SUS304 無鍍層
Model No.	SUS304 無鍍層
样品颜色	銀色
Color	SILVER
材料名称	SUS304
Material	SUS304
样品接收日期	2024.11.19
Sample Received Date	Nov. 19, 2024
样品检测日期	2024.11.19-2024.11.28
Testing Period	Nov. 19, 2024 to Nov. 28, 2024

检测要求
Test Requested 根据客户要求，对所提交样品中的铅(Pb)，镉(Cd)，汞(Hg)，六价铬(Cr(VI))，铍(Be)进行测试。
As specified by client, to test Lead (Pb), Cadmium (Cd), Mercury (Hg), Hexavalent Chromium (Cr(VI)), Beryllium(Be) in the submitted sample(s).

检测依据/检测结果
Test Method/Test Result(s) 请参见下页。
Please refer to the following page(s).

批 准
Approved by: 宋岩
技术经理 Technical Manager

日 期
Date 2024.11.28

苏州市华测检测技术有限公司
Centre Testing International(Suzhou) Co.,Ltd
No. R375301201
江苏省苏州市相城区澄阳路3286号
No.3286Chengyang Road, Xiangcheng District, Suzhou,Jiangsu

CTI 华测检测

检测报告
Test Report

样品/部位描述 Sample/Part Description

序号 No.	CTI样品ID CTI Sample ID	描述 Description
1	001	银色金属 Silvery metal

备注: **对于检测铅，镉，汞，铍之样品已消解完全。**

-N.D. = 未检出 (小于方法检出限或定量限)

-mg/kg = ppm = 百万分之一

-LOQ = 定量限, 六价铬的定量限为0.10 μg/cm²

-▼六价铬浓度小于0.10 μg/cm²，样品未检出六价铬。由于未获知样品的存储条件和生产日期，样品的六价铬测试结果仅能代表测试时样品含六价铬的状态。

Remark: **The sample(s) had been dissolved totally tested for Lead, Cadmium, Mercury, Beryllium.**

-MDL = Method Detection Limit

-N.D. = Not Detected (<MDL or LOQ)

-mg/kg = ppm = parts per million

-LOQ = Limit of Quantification, The LOQ of Hexavalent chromium is 0.10 μg/cm²

-▼ The sample is negative for Cr(VI) − The Cr(VI) concentration is below 0.10 μg/cm². The coating is considered a non-Cr(VI) based coating. Information on storage conditions and production date of the tested sample is unavailable and thus Cr(VI) results represent status of the sample at the time of testing.

注释: **本报告中的数据结果供科研、教学、企业内部质量控制、企业产品研发等目的用。**

“*”表示该方法不在CNAS认可范围内。

Note: **The testing data and result(s) in this report is(are) just for scientific research, education, internal quality control and product development etc.**

“*” indicates the method(s) is (are) not in CNAS accreditation scope.

检测报告
Test Report

检测流程 Test Process

1. 铅(Pb)， 镉(Cd)

Lead (Pb), Cadmium (Cd)

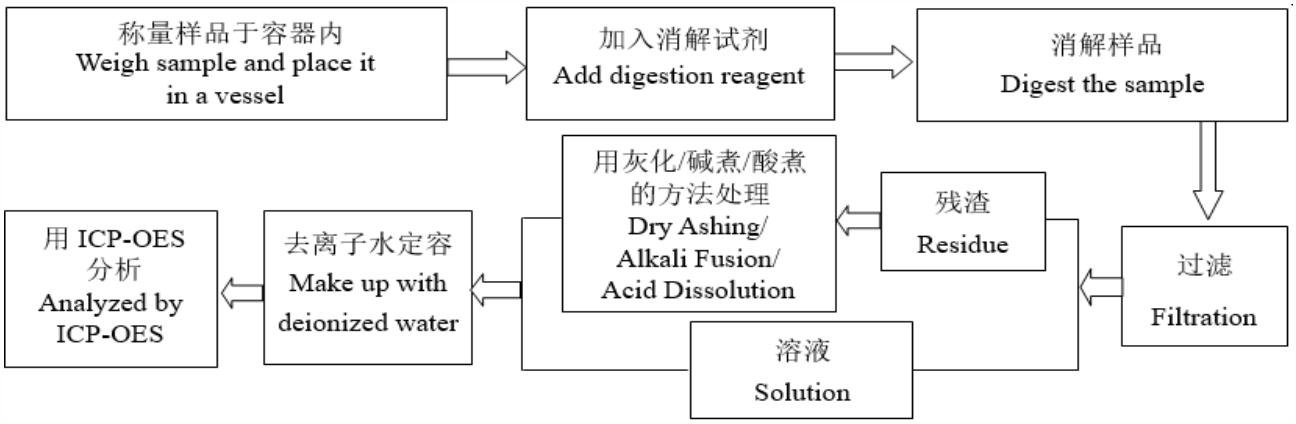

2. 汞(Hg)

Mercury (Hg)

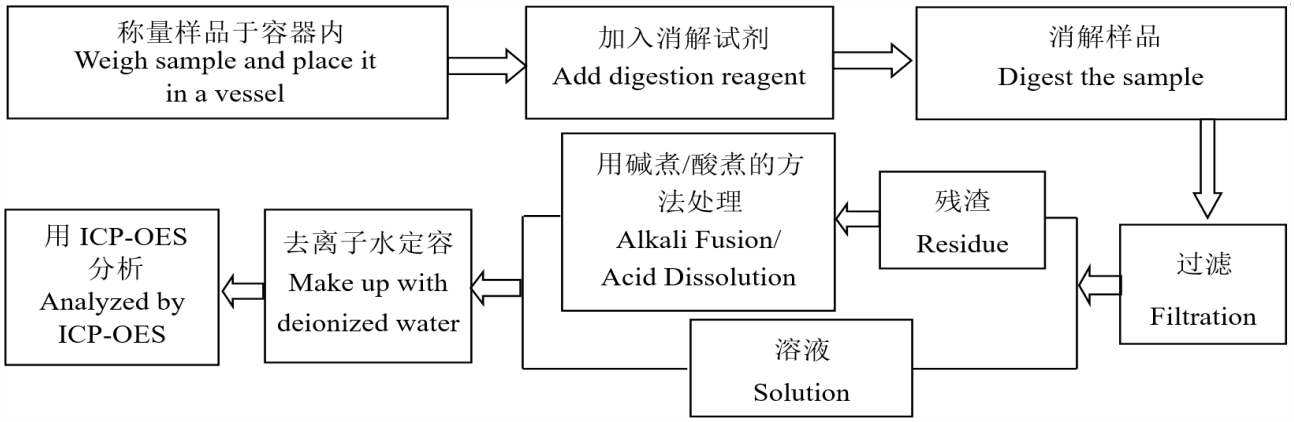

3. 六价铬(Cr(VI))

Hexavalent Chromium (Cr(VI))

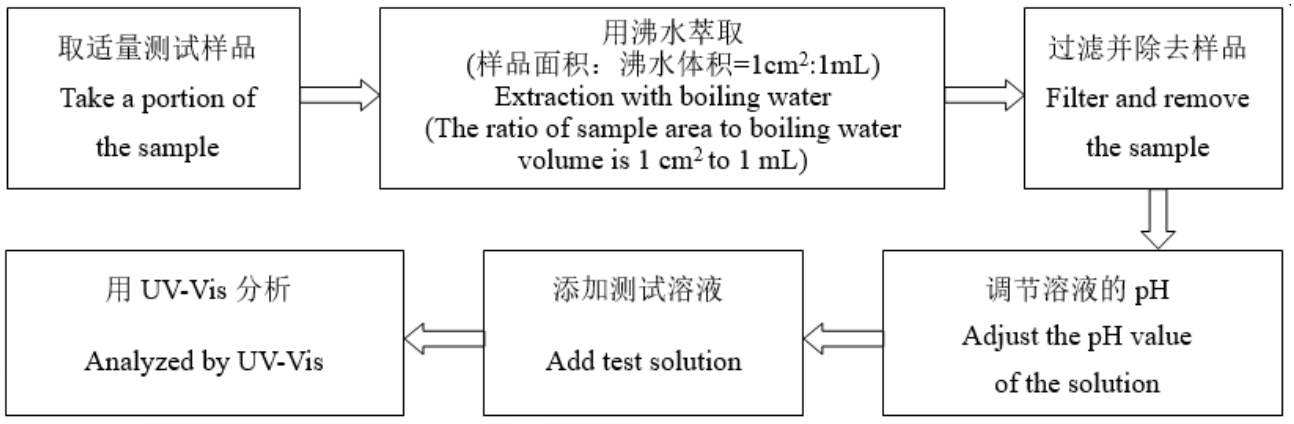

检测报告
Test Report

4. 铍(Be)

Beryllium(Be)

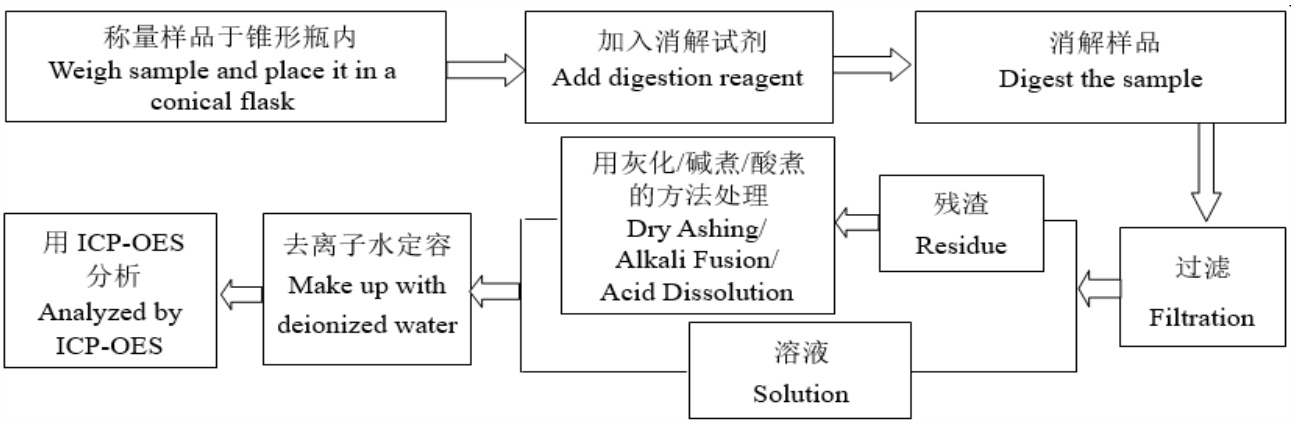

检测报告
Test Report

样品图片
Photo(s) of the sample(s)

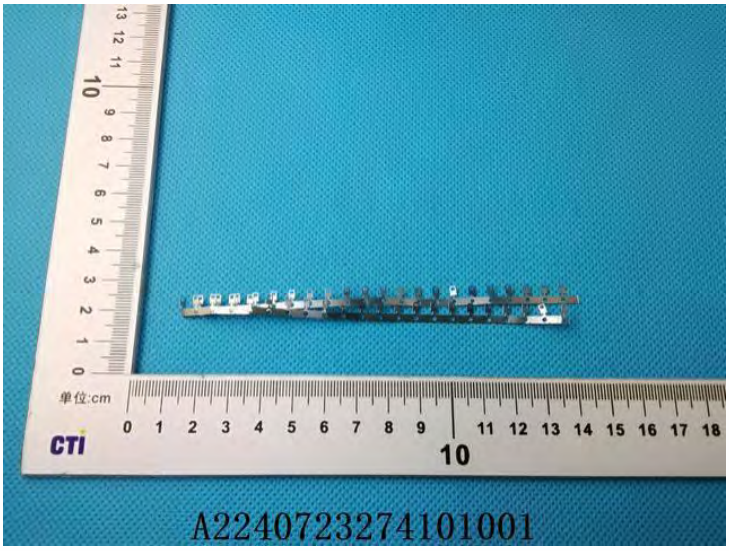

声明Statement：

1. 检测报告无批准人签字、“专用章”及报告骑缝章无效；
   This report is considered invalid without approved signature, special seal and the seal on the perforation;
2. 报告抬头公司名称及地址、样品及样品信息由申请者提供，申请者应对其真实性负责，CTI未核实其真实性；
   The Company Name shown on Report and Address, the sample(s) and sample information was/were provided by the applicant who should be responsible for the authenticity which CTI hasn’t verified;
3. 本报告检测结果仅对受测样品负责；
   The result(s) shown in this report refer(s) only to the sample(s) tested;
4. 除非另有说明，报告参照ILAC-G8:09/2019 / CNAS-GL015:2022使用简单接受(w=0)二元判定规则进行符合性判定;
   Unless otherwise stated, the decision rule for conformity reporting is based on Binary Statement for Simple Acceptance Rule (w=0) stated in ILAC-G8:09/2019 / CNAS-GL015:2022;
5. 未经CTI书面同意，不得部分复制本报告；
   Without written approval of CTI, this report can’t be reproduced except in full;
6. 如检测报告中的英文内容与中文内容有差异，以中文为准。
   In case of any discrepancy between the English version and Chinese version of the testing reports (if generated), the Chinese version shall prevail.

报告结束

*** End of report ***

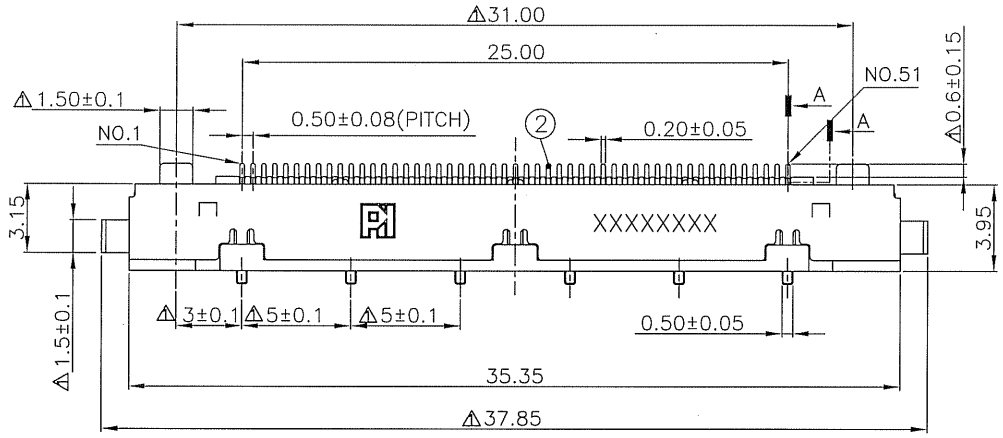

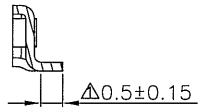

SECTION A–A
SCALE 8:1

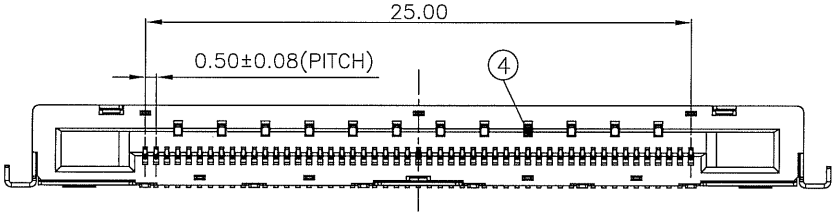

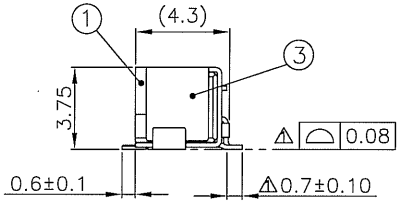

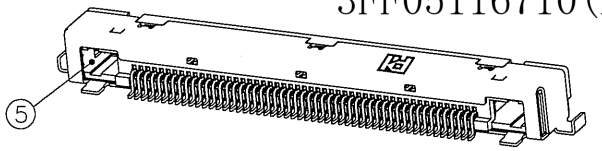

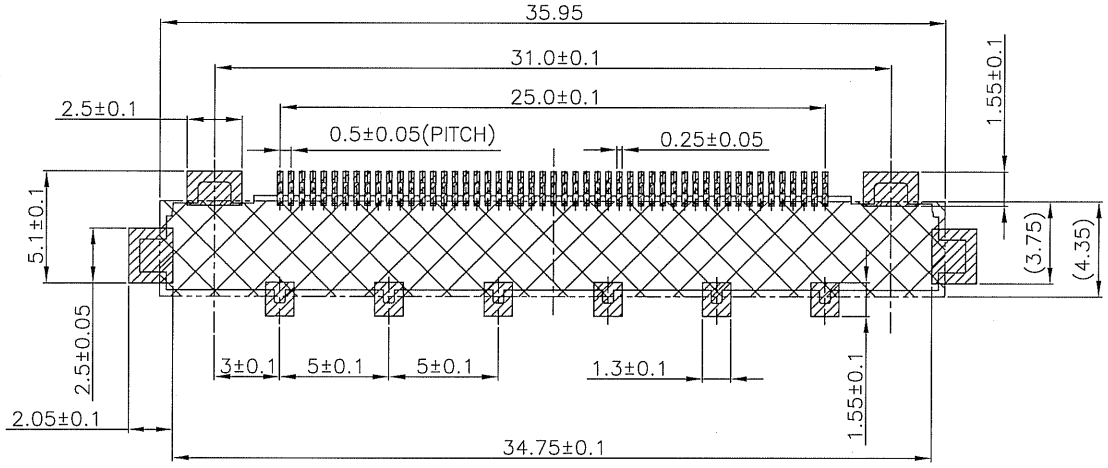

APPLICABLE P.C.B. DIMENSION

NOTES: MATERIAL&FINISH

1. HOUSING:LCP;COLOR:BLACK
2. TERMINAL:COPPER ALLOY.t=0.20mm
   PLATING:CONTACT AREA 5u' Min. GOLD,
   SOLDER AREA MATTE TIN (100%)75u" Min.(LEAD FREE)
   OVERALL 50u'Min.NICKEL UNDER PLATED.
3. SHELL:STAINLESS STEEL,t=0.20mm
   PLATING:MATTE TIN(100%)50u" Min.(LEAD FREE)
   OVERALL 10u" Min.NICKEL UNDER PLATED.
4. GROUND:STAINLESS STEEL,t=0.20mm
   PLATING:MATTE TIN(100%)50u" Min.(LEAD FREE)
   OVERALL 10u" Min.NICKEL UNDER PLATED.
5. LOCK PIN:STAINLESS STEEL.t=0.20mm
6. PART NO:187059–51221
   - PACKAGED 1:CARRIER
   - PLATING
   - PIN NO.
7. DATE CODE: XXXXXXXX
   - PRODUCTION LINE
   - DATE
   - MONTH
   - YEAR
   - 1:TAIWAN PRODUCTION
   - 2:SHENZHEN PRODUCTION
   - 3:SUZHOU PRODUCTION

設計驗證 工程課 2025-07-11 發行 鈺緯科技開發股份有限公司

ENGINEERING DEPARTMENT ISSUE 2008. 6. 26 P-TWO INDUSTRIES INC.

3FF05116710(F0326)

NO.	DESCRIPTION	Q'TY	MATERIAL	REMARKS
5	LOCK PIN	2	STAINLESS STEEL	NA
4	GROUND	3	STAINLESS STEEL	TIN PLATING
3	SHELL	1	STAINLESS STEEL	TIN PLATING
2	TERMINAL	51	COPPER ALLOY	CONTACT GOLD/SOLDERING TIN
1	HOUSING	1	LCP	COLOR:BLACK

CUSTOMER DRAWING

P-TWO INDUSTRIES INC.

SER	AREA	DESCRIPTION	CHK	DATE
1	3-J,2-H 7-E,5-I	NA080619	LEN	6/26,08
		ALA510-A0G1D-V		

UNLESS OTHERWISE SPECIFIED TOLERANCES ARE
X.X ±0.25
X.XX ±0.15
X.XXX
ANG. ±0°30'

UNIT mm | SIZE A3

APPROVED BY | DATE 6/26/08
CHECKED BY | DATE
DRAWN BY James Lee | DATE 9/26/08

TITLE: LVDS 9 A TYPE

DOCUMENT NO: JB87-01018 | PAGE 2

DRAWING NO: 187059-51221 | REV B | SHEET 1/1 | SCALE 4:1

The packaging steps are as follows：

1.> The bottom of the outer box is evenly fixed on the edge of the seam with adhesive tape. Always use H-seal. (Outer box：365x280x360mm)

2.> Put the plastic bag in the outer box and put in 2 pcs desiccant.

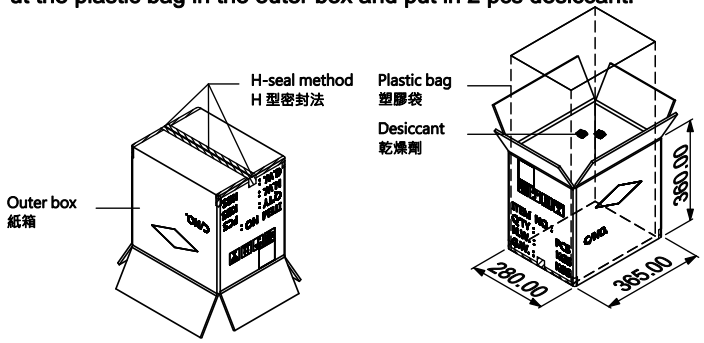

3.> Put in the appropriate EPE block.

CARRIER 56mm
EPE block 珍珠棉

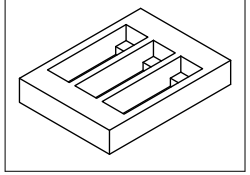

4.> CARRIER attach a label

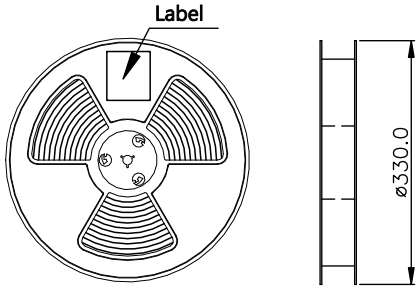

5.> Put in the appropriate EPE block. (Same as above 3.>)

6.> Plastic bag sealed.The outer box is sealed with tape evenly on the edge of the seam. Always use H-seal.

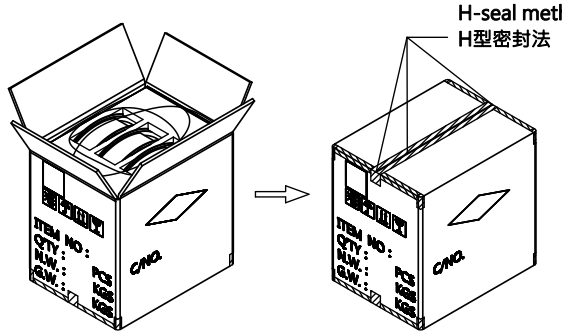

Note:

(1)The quantity packed in each carrier refered to list 1。

(2)Carrier P/N:487005-56051-4

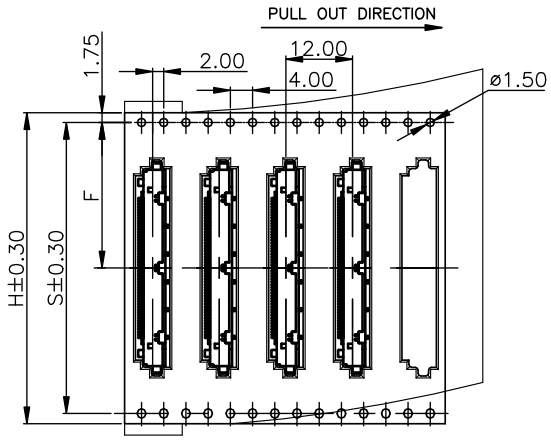

List 1

ITEM \ PIN				51PIN
CARRIER	H	F	S	
	56mm	26.2±0.15	52.4±0.1	√
Quantity /Carrier				1250 PCS
Cardboard boxes the quantity of carrier				3 carrier
Total quantity				3750 PCS

step 5.>

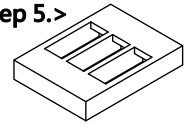

step 4.>



step 3.>

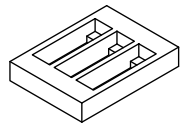

step 2.>

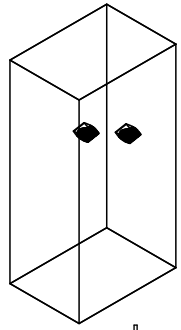

step 1.>

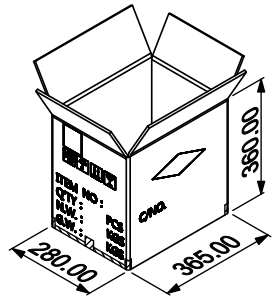

P-TWO INDUSTRIES INC.

CUSTOMER DRAWING			
EDCC	Jacky.Lin	APPROVED BY	
	Allen.Wang	DRAWN BY	
SER	DESCRIPTION		

UNLESS OTHERWISE SPECIFIED TOLERANCES ARE
X.X ±0.25
X.XX ±0.15
X.XXX
ANG. ±0°30'

UNIT mm | SIZE A4

APPROVED BY	Jacky Lin
CHECKED BY	King Kuan
DRAWN BY	Allen Wang
DRAWN DATE	2025/05/02
TITLE	LVDS 9 A TYPE PACKAGE DIAGRAM
PART NO	187059-51221
REV	A
SHEET	1/3
SCALE	1:1
PAGE	-

7.> The location of the delivery label is shown in the figure.

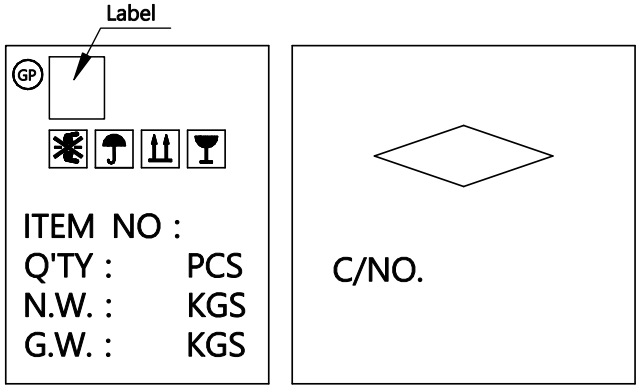

Side view of outer box　　Fornt view of outer box

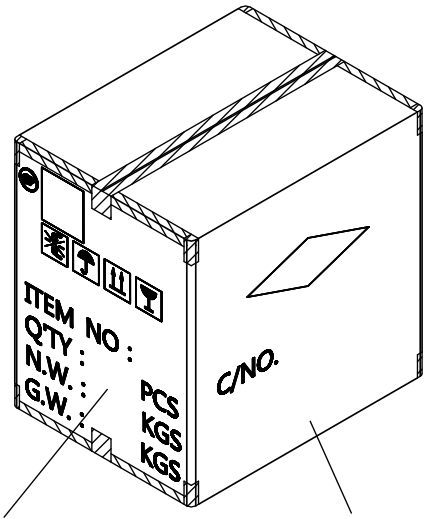

Side view of outer box　　Fornt view of outer box

8.>Maximum pallet height limit
Sea freight： for 5 floors * 8 boxes per floor for a total of 40 boxes
Air freight： for 4 floors * 8 boxes per floor for a total of 32 boxes.

9.>According to the above 8.> pallet package shipment, the quantity is not enough to ship in bulk.

10.>Each layer of the pallet is stacked in a tic-tac-toe manner, as shown in the figure.

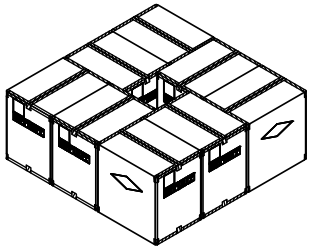

Double layer stacking icon

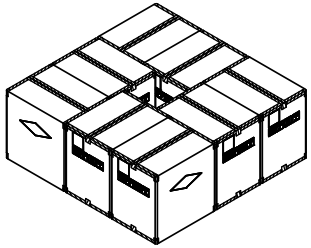

Singular layer stack icon

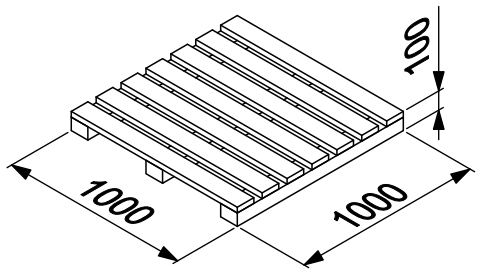

11.> Shrink film wrapped pallet：

1). Please fix the leading edge of the shrink film on the pallet or the bottom that can be carried by a fork.
2). Wrap the shrink film firmly on the consignment.
3). Continue to wind up the shrink film, overlapping the shrink film of the previous layer by 50%.
4). When the shrink film is wrapped to the top, each box corner must be wound diagonally and crosswise until it is completely covered.
5). Finally, the shrink film is pulled down vertically to the bottom, firmly overlapping the bottom of the pallet.

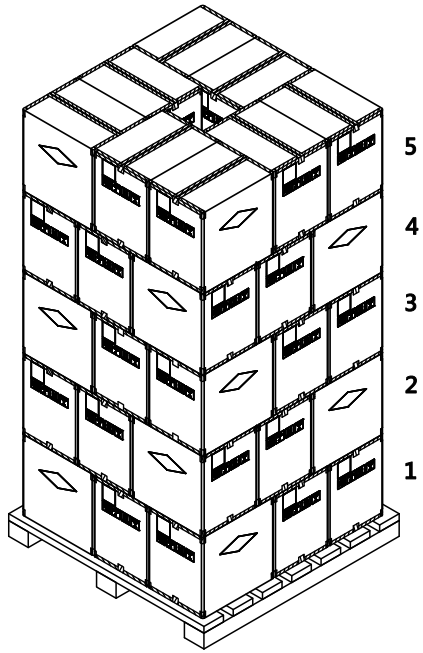

H-seal method:
1. Apply 1 tape along the center seam
2. Stick 2 tapes along the opposite seams
※PS. For heavy shipments, please repeatedly apply multiple pieces of tape, repeat the H-box sealing method, and properly seal the top and bottom seams of the carton.

P-TWO INDUSTRIES INC.

CUSTOMER DRAWING		UNLESS OTHERWISE SPECIFIED TOLERANCES ARE X.X ±0.25 X.XX ±0.15 X.XXX ANG. ±0°30'	APPROVED BY Jacky Lin	TITLE LVDS 9 A TYPE PACKAGE DIAGRAM			
EDCC	Jacky.Lin		CHECKED BY King Kuan				
	APPROVED BY		DRAWN BY Allen Wang	PART NO 187059-51221			
	Allen.Wang	UNIT mm	DRAWN DATE 2025/05/02	REV A	SHEET 2/3	SCALE 1:1	PAGE -
SER DESCRIPTION	DRAWN BY	SIZE A4					

Label

SUZHOU

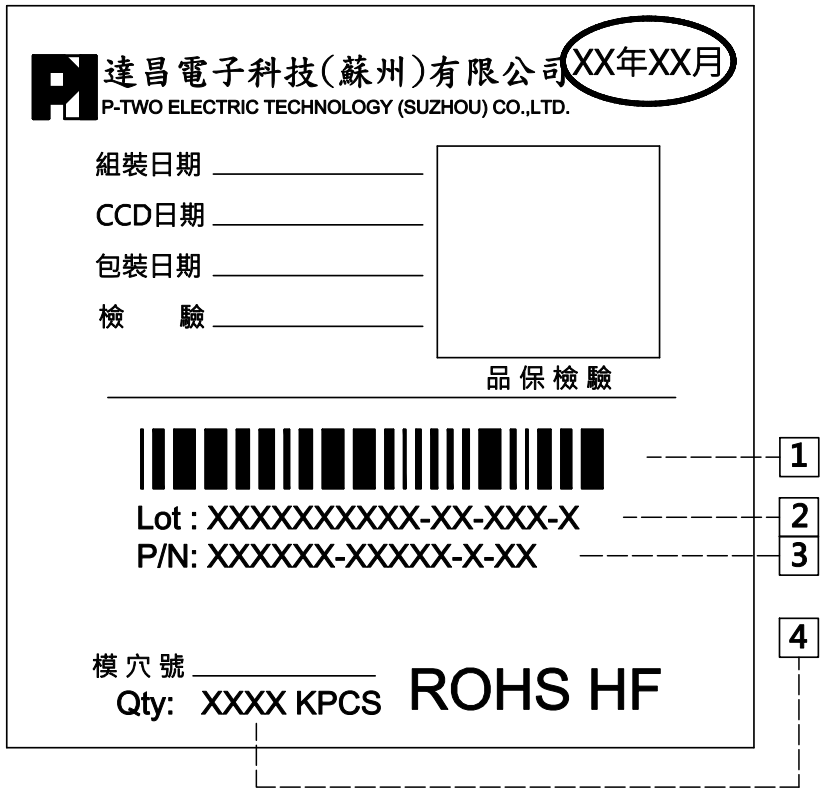

1 Bar code (According to 2)
2 Serial number
3 Product Part Number
4 QUANTITY

THAILAND

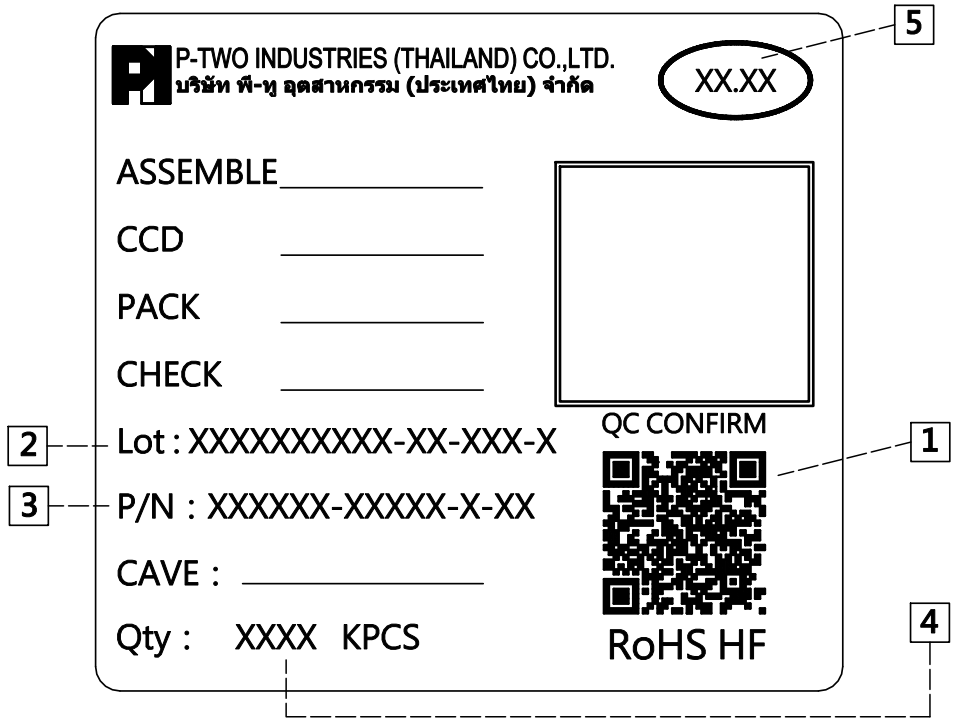

1 QR code (According to 2)
2 Serial number
3 Product Part Number
4 QUANTITY
5 XX : YEAR 20XX
.XX : MONTH

P-TWO INDUSTRIES INC.

CUSTOMER DRAWING		UNLESS OTHERWISE SPECIFIED TOLERANCES ARE X.X ±0.25 X.XX ±0.15 X.XXX ANG. ±0°30'	APPROVED BY Jacky Lin	TITLE LVDS 9 A TYPE PACKAGE DIAGRAM			
EDCC	Jacky.Lin APPROVED BY		CHECKED BY King Kuan				
	Allen.Wang DRAWN BY		DRAWN BY Allen Wang	PART NO 187059-51221			
SER DESCRIPTION		UNIT mm	SIZE A4	DRAWN DATE 2025/05/02	REV A	SHEET 3/3	SCALE 1:1	PAGE –