TO Messrs. THIN CHANG CORPORATION

ALUMINUM ELECTROLYTIC CAPACITORS SPECIFICATION SHEET

CUSTOMER PART No.		
Rubycon PART No.	ZLH SERIES (Lead free and PET sleeve type)	
DRAWING No.	REE – 036680	ISSUE No. 1
ISSUE DATE	4 SEPTEMBER 2009	

RUBYCON CORPORATION
ENGINEERING DIVISION

1938-1, NISHIMINOWA, INA-SHI, NAGANO-KEN, JAPAN
TEL No. 0265-72-7116
FAX No. 0265-73-3380

DESIGN	SEIJI IWAI
CHECK	TETSUYA MIZU
APPROVAL	YOSHINORI SASAKI

1.Scope.
This specification covers polarized aluminum electrolytic capacitors with non-solid electrolyte for use in electronic equipments .

2. Reference Standard
JIS C 5141 (1991) and JIS C 5102 (1994) methods for testing.

3. Operating Temperature Range
-40°C to +105°C

4. Performance Refer to Table-1

5. Style and Numbering System
(1) Style CE 04 (Radial Leaded)

(2) Numbering System

Rated Voltage	Series	Nominal Capacitance	Tolerance	Option	Lead Forming	Case size
□□□	ZLH	□□□	M	EFC	T8	□□□ X □□□

EFC : Lead free type with PET sleeve

6. Marking
Unless otherwise specified, capacitor shall be clearly marked the following items on its body.
Sleeve color : Black
Lettering color : White

(1) Trade mark	Rubycon
(2) Rated Voltage	V
(3) Nominal Capacitance	μF
(4) Polarity	(Negative Polarity)
(5) Series	ZLH
(6) Date code	
(7) Maximum Operating Temperature	105°C
(8) PET Sleeve mark	PET

7. Vent
On capacitors whose diameter is 6.3mm and greater, a safety vent shall be provided.

8. Notes on use of aluminum electrolytic capacitors
(1) Charge and discharge
Do not use for the circuit that repeats quick charge or discharge.

(2) External stress
Do not apply excessive force of pushing, pulling bending, and/or twisting to the main body, lead wire and terminals.

(3) Heat resistance at soldering process
In the soldering process of PC board with Capacitors mounted, secondary shrinkage or crack of sleeve may be observed when soldering temperature is too high and /or soldering time is too long.
If lead wire of other components or pattern of double sided PC board touches the capacitor, the similar failure may be also originated at pre-heating, heating at hardening process of adhesive and soldering process.

(4) Insulation and PC board mounting
Sleeve is for marking purpose only.
It is not recognized as insulation materials.
When double sided PC board is employed, note that it could cause a short circuit if lead wire of other components or pattern of double sided PC board touches capacitor. Please avoid circuit pattern runs underneath capacitor.
In addition, case and cathode terminal are not insulated.

(5) Adhesives and coating materials
Do not use the adhesives and coating materials that contain halogenated organic solvents or chloroprene as polymer.

(6) Storage
Keep at a normal temperature and humidity. During a long storage time, leakage current will be increased. To prevent heat rise or any trouble that high leakage current possibly causes, voltage treatment is recommended for the capacitors that have been stored for a long time.
*Aluminum electrolytic capacitors should not be stored under exposure to ozone, ultraviolet rays or radiation

.<Storage Condition>

*Aluminum electrolytic capacitors should not be stored in high temperatures or where there is a high level of humidity. The suitable storage condition is 5°C-35°C and less than 75% in relative humidity.

*Aluminum electrolytic capacitors should not be stored in damp conditions such as water, saltwater spray or oil spray.

*Do not store aluminum electrolytic capacitors in an environment full of hazardous gas (hydrogen sulfide, sulfurous acid gas, nitrous acid, chlorine gas, ammonia or bromine gas).

(7) Fumigation and halogenated flame retardant

It may cause corrosion of internal electrodes, aluminum cases and terminal surface when the following conditions exist.

*Fumigation of wooden pallets before shipment to disinfect vermin.

*Existence of components or parts that contain halogenated flame retardant agent (bromine etc.) together with capacitors.

*When halogenated detergents or antiseptics for preventing infection of epidemic diseases contact directly to capacitors.

(8) PC board cleaning after soldering

Please consult us when cleaning is subjected.

♦Guide to application except the above are described in our catalog and EIAJ RCR-2367C.

EIAJ RCR-2367C : " Safety Application Guide for fixed aluminum electrolytic capacitors for use in electronic equipment."
Published by Japan Electronics and Information Technology Industries Association.

♦Table-1 PERFORMANCE

<table>
<tr><th colspan="2">ITEMS</th><th>PERFORMANCE</th></tr>
<tr><td>1</td><td>Rated Voltage(WV)
Surge Voltage (SV)</td><td>
<table>
<tr><td>WV(V.DC)</td><td>6.3</td><td>10</td><td>16</td><td>25</td><td>35</td><td>50</td><td>63</td><td>80</td><td>100</td></tr>
<tr><td>SV(V.DC)</td><td>8</td><td>13</td><td>20</td><td>32</td><td>44</td><td>63</td><td>79</td><td>100</td><td>125</td></tr>
</table>
</td></tr>
<tr><td>2</td><td>Nominal Capacitance
(Tolerance)</td><td><Criteria>
8.2 to 8200μF(±20%)

<Condition>

Measuring Frequency : 120Hz±20%
Measuring Voltage : Not more than 0.5Vrms + 1.5 to 2.0V.DC
Measuring Temperature : 20 ± 2 °C</td></tr>
<tr><td>3</td><td>Leakage Current</td><td><Condition>
The rated voltage shall be applied between terminals of capacitor such that the terminal voltage will reach the rated voltage within one minute and the leakage current shall be measured at 2 minutes after the voltage has reached the rated voltage across a 1000 ±10 Ω series protection resister. Then the current value shall not exceed value calculated from following formula .

<Criteria>
I=0.01CV or 3μA whichever is greater

where I : Leakage current in μA.
C : Nominal capacitance in μF.
V : Rated voltage in V.DC.</td></tr>
<tr><td>4</td><td>Dissipation Factor
(tanδ:Tangent of loss angle)</td><td><Criteria>
<table>
<tr><td>WV(V.DC)</td><td>6.3</td><td>10</td><td>16</td><td>25</td><td>35</td><td>50</td><td>63</td><td>80</td><td>100</td></tr>
<tr><td>tanδ</td><td>0.22</td><td>0.19</td><td>0.16</td><td>0.14</td><td>0.12</td><td>0.10</td><td>0.09</td><td>0.08</td><td>0.08</td></tr>
</table>
When nominal capacitance is over 1000μF, tanδ shall be added 0.02 to the listed value with increase of every 1000μF.

<Condition>
See ITEM 2, Nominal Capacitance, for measuring frequency, voltage and temperature.</td></tr>
<tr><td>5</td><td>Terminal Strength</td><td><Condition>
Tensile Strength of Terminals
The body of capacitor shall be fixed and the tensile force of following table shall be applied to the terminal in lead out direction of the terminal for 10±1 seconds.

Bending Strength of Terminals
The body of capacitor shall be held in such a way that the regular lead-out axis of lead wire terminal becomes vertical. The weight of following table shall be suspended from the end of terminal. In this condition, after the body of sample is bent through 90 degrees, it shall be returned to the original position. Next the body shall be reversibly bent through 90 degrees and again returned to the original position.
<table>
<tr><td>Diameter of lead wire</td><td>Tensile force
N{kgf}</td><td>Bending force
N{kgf}</td></tr>
<tr><td>0.5mm and less</td><td>5{0.51}</td><td>2.5{0.25}</td></tr>
<tr><td>Over 0.5mm to 0.8mm incl</td><td>10{1.0}</td><td>5 {0.51}</td></tr>
</table>
<Criteria>
Notable changes shall not be found, as breakage or looseness in the terminal.</td></tr>
</table>

6 Temperature Coefficient and Drift

<Condition>

STEP	Testing Temperature (°C)	Time
1	20±2	Time to reach thermal equilibrium
2	-40±3	//
3	-25±3	//
4	20±2	//
5	105±2	2 hrs.
6	20±2	Time to reach thermal equilibrium

Capacitance, D.F. and Impedance shall be measured at 120Hz.

<Criteria>

STEP 2,3	Impedance Ratio	The value of ratio to STEP 1 not more than value of following table.
STEP 5	Capacitance Change	Within ±25% of the value of STEP 1
	Dissipation Factor	Not more than the specified value
	Leakage Current	Not more than 8 times the specified value
STEP 6	Capacitance Change	Within ±10% of the value of STEP 1
	Dissipation Factor	Not more than the specified value
	Leakage Current	Not more than the specified value

WV(V.DC)	6.3	10	16	25	35	50	63	80	100
Z(-25°C)/Z(+20°C)	2	2	2	2	2	2	2	2	2
Z(-40°C)/Z(+20°C)	3	3	3	3	3	3	3	3	3

7 Load Life Test

<Condition>

Capacitor under the test shall be applied the rated voltage continuously through 1000 Ω series protective resistor (with maximum ripple current) at 105±2°C for following test period. After the test and returned in standard condition for 1 to 2 hours, and the capacitor shall meet following requirements.

Case size	Life time
φD≤6.3	$6000\ ^{+72}_{0}$
φD=8	$8000\ ^{+72}_{0}$
φD≥10	$10000\ ^{+72}_{0}$

<Criteria>

Leakage Current	Not more than the specified value
Capacitance Change	Within ±25% of the initial value (6.3V,10V: ±30%)
Dissipation Factor	Not more than 200% of the specified value
Appearance	Notable changes shall not be found, except sleeve

8 Shelf Life Test

<Condition>

Capacitors shall be stored at 105±2°C with no voltage applied for 1000^{+48}_{0} hours. After the test and returned in standard condition for 1 to 2 hours and the capacitor shall meet following requirements. (If any doubt arises on the judgment, the capacitors shall be subjected to voltage treatment specified in JIS C 5141,5.2.)

<Criteria>

Leakage Current	Not more than the specified value
Capacitance Change	Within ±25% of the initial value
Dissipation Factor	Not more than 200% of the specified value
Appearance	Notable changes shall not be found

9 Surge Voltage

<Condition>

Capacitors shall be applied the surge voltage through a $(100\pm50)/C_R$ [kΩ] resistor in series for 30±5 seconds in every 6±0.5 minutes at 15 to 35°C. Procedure shall be repeated 1000 times.

Then the capacitors shall be left under normal humidity for 1 to 2 hours before measurement.

[C_R : Nominal Capacitance (μF)]

<Criteria>

Leakage Current	Not more than the specified value
Capacitance Change	Within ±15% of the initial value
Dissipation Factor	Not more than the specified value
Appearance	Notable changes shall not be found

◊This test simulates overvoltage at abnormal situations, and not be hypothesizing that overvoltage is always applied.

10 Vibration Test

<Condition>

Testing shall be done out in 3 AXIS for 2 hours each (total 6 hours) as below.

Fix lead wire at a point not more than 4mm from the body , use mounting device separately for the one with a diameter 12.5mm and greater or with a length 25mm and longer.

Vibration frequency range : 10 to 55Hz
Peak to peak amplitude : 1.5mm
Sweep rate : 10 to 55 to 10Hz, In about 1min

<Criteria>

Capacitance (During test)	Measured value shall be stable. (The time from one end to the other of the vibration frequency within last 30 minutes at last direction.)
Capacitance Change	Within ±5% of the initial value
Appearance	Notable changes shall not be found

11 Solderability

<Condition>

Terminals of the capacitor shall be immersed in flux (ethanol solution of the rosin, 25 wt% rosin) for 5 to 10 seconds and shall be immersed in the solder bath (235±5°C) and held for 2±0.5 seconds, and pulled out at the same speed.

<Criteria>

At least 3/4 of circumferential surface of dipped portion of the terminal shall be covered with new solder.

12 Resistance to Solder Heat

<Condition>

Terminals of the capacitor shall be immersed into solder bath at 260±5°C for 10±1 seconds up to 1.5 to 2.0mm from the body of capacitor.

Then the capacitors shall be left under the normal temperature and normal humidity for 1 to 2 hours before measurement.

<Criteria>

Leakage Current	Not more than the specified value
Capacitance Change	Within ±10% of the initial value
Dissipation Factor	Not more than the specified value
Appearance	Notable changes shall not be found

13	Resistance to Damp Heat (Steady State)	<Condition> Capacitor shall be stored in the ambient of 40±2°C and relative humidity 90 to 95% for 240±8 hours. Then the capacitors shall be left under the normal temperature and normal humidity for 1 to 2 hours before measurement. <Criteria>

Leakage Current	Not more than the specified value
Capacitance Change	Within ±15% of the initial value
Dissipation Factor	Not more than the specified value
Appearance	Notable changes shall not be found

14 Maximum Permissible Ripple Current

(1)The maximum permissible ripple current is the maximum A.C. current at 100kHz and can be applied at maximum operating temperature.
(2)The combined value of D.C. voltage and the peak A.C. voltage shall not exceed the rated voltage and shall not be reverse voltage.

<Frequency Coefficient>

Capacitance(μF) \ Frequency(Hz)	120	1k	10k	100k≤
8.2 to 33	0.42	0.70	0.90	1.00
47 to 270	0.50	0.73	0.92	1.00
330 to 680	0.55	0.77	0.94	1.00
820 to 1800	0.60	0.80	0.96	1.00
2200 to 8200	0.70	0.85	0.98	1.00

< Temperature Coefficient >

Ambient Temperature(°C)	105	85	65≥
Coefficient	1.0	1.7	2.1

◊Temperature coefficient shows a limit of ripple current exceeding the rated ripple current that can be passed through a capacitor at each temperature when the life expectancy of a capacitor becomes to be nearly equal with the lifetime at the rated maximum operating temperature.
◊Use of aluminum electrolytic capacitor under ripple voltage with wide amplitude is equivalent to quick charge-discharge operation.
When ripple voltage with the amplitude over 70Vp-p is expected for the products with rated voltage over 100V, please contact us.

9. Diagram of dimensions. :unit mm

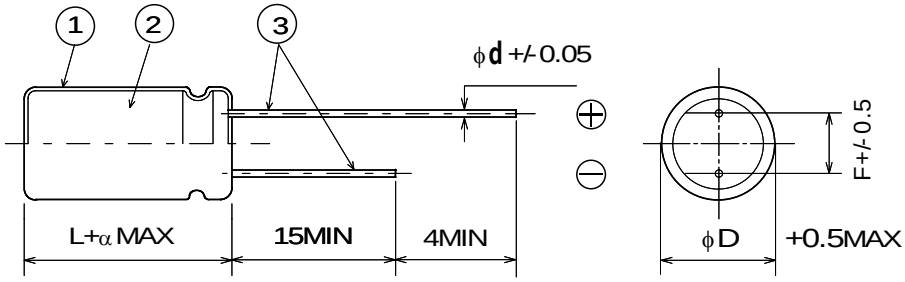

♦Table-2

φD	5	6.3	8	10	12.5	16	18
φd	0.5	0.5	0.6	0.6	0.6	0.8	0.8
F	2.0	2.5	3.5	5.0	5.0	7.5	7.5
α	L≤16 : α=1.5 L≥20 : α=2.0						

♦Table-3

①	Sleeve	P.E.T.
②	Case	Aluminum
③	Lead Wire	Tin plated

♦Table4 Standard size, Maximum permissible ripple current

Rated voltage 6.3V (0J)				
Nominal capacitance (μF)	Size φDxL(mm)	Ripple Current (mA r.m.s./105°C,100kHz)	Impedance (ΩMAX)	
			20°C,100kHz	-10°C,100kHz
220	5X11	345	0.22	0.80
470	6.3X11	540	0.094	0.35
820	8X11.5	945	0.056	0.19
1200	8X16	1250	0.045	0.15
1200	10X12.5	1330	0.039	0.14
1500	8X20	1500	0.029	0.11
1800	10X16	1760	0.028	0.10
2200	10X20	1960	0.020	0.060
2700	10X23	2250	0.018	0.054
3900	12.5X20	2480	0.017	0.043
4700	12.5X25	2900	0.015	0.038
5600	12.5X30	3450	0.013	0.033
6800	16X20	3250	0.015	0.038
6800	12.5X35	3570	0.012	0.031
8200	16X25	3630	0.013	0.035

Rated voltage 10V (1A)				
Nominal capacitance (μF)	Size φDxL(mm)	Ripple Current (mA r.m.s./105°C,100kHz)	Impedance (ΩMAX)	
			20°C,100kHz	-10°C,100kHz
150	5X11	345	0.22	0.80
330	6.3X11	540	0.094	0.35
680	8X11.5	945	0.056	0.19
1000	8X16	1250	0.045	0.15
1000	10X12.5	1330	0.039	0.14
1500	8X20	1500	0.029	0.11
1500	10X16	1760	0.028	0.10
1800	10X20	1960	0.020	0.060
2200	10X23	2250	0.018	0.054
3300	12.5X20	2480	0.017	0.043
3900	12.5X25	2900	0.015	0.038
4700	12.5X30	3450	0.013	0.033
4700	16X20	3250	0.015	0.038
5600	12.5X35	3570	0.012	0.031
6800	16X25	3630	0.013	0.035

Rated voltage 16V (1C)				
Nominal capacitance (μF)	Size φDxL(mm)	Ripple Current (mA r.m.s./105°C,100kHz)	Impedance (ΩMAX)	
			20°C,100kHz	-10°C,100kHz
100	5X11	345	0.22	0.80
220	6.3X11	540	0.094	0.35
470	8X11.5	945	0.056	0.19
680	8X16	1250	0.045	0.15
680	10X12.5	1330	0.039	0.14
1000	8X20	1500	0.029	0.11
1000	10X16	1760	0.028	0.10
1500	10X20	1960	0.020	0.060
1800	10X23	2250	0.018	0.054
2200	12.5X20	2480	0.017	0.043
2700	12.5X25	2900	0.015	0.038
3300	12.5X30	3450	0.013	0.033
3300	16X20	3250	0.015	0.038
3900	12.5X35	3570	0.012	0.031
4700	16X25	3630	0.013	0.035

Rated voltage 25V (1E)				
Nominal capacitance (μF)	Size φDxL(mm)	Ripple Current (mA r.m.s./105°C,100kHz)	Impedance (ΩMAX)	
			20°C,100kHz	-10°C,100kHz
68	5X11	345	0.22	0.80
150	6.3X11	540	0.094	0.35
330	8X11.5	945	0.056	0.19
390	8X16	1250	0.045	0.15
470	10X12.5	1330	0.039	0.14
560	8X20	1500	0.029	0.11
680	10X16	1760	0.028	0.10
820	10X20	1960	0.020	0.060
1000	10X23	2250	0.018	0.054
1500	12.5X20	2480	0.017	0.043
1800	12.5X25	2900	0.015	0.038
2200	12.5X30	3450	0.013	0.033
2200	16X20	3250	0.015	0.038
2700	12.5X35	3570	0.012	0.031
3300	16X25	3630	0.013	0.035

Rated voltage 35V (1V)				
Nominal capacitance (μF)	Size φDxL(mm)	Ripple Current (mA r.m.s./105°C,100kHz)	Impedance (ΩMAX)	
			20°C,100kHz	-10°C,100kHz
47	5X11	345	0.22	0.80
100	6.3X11	540	0.094	0.35
220	8X11.5	945	0.056	0.19
270	8X16	1250	0.045	0.15
330	10X12.5	1330	0.039	0.14
390	8X20	1500	0.029	0.11
470	10X16	1760	0.028	0.10
560	10X20	1960	0.020	0.060
680	10X23	2250	0.018	0.054
1000	12.5X20	2480	0.017	0.043
1200	12.5X25	2900	0.015	0.038
1500	12.5X30	3450	0.013	0.033
1500	16X20	3250	0.015	0.038
1800	12.5X35	3570	0.012	0.031
2200	16X25	3630	0.013	0.035

Rated voltage 50V (1H)				
Nominal capacitance (μF)	Size φDxL(mm)	Ripple Current (mA r.m.s./105°C,100kHz)	Impedance (ΩMAX)	
			20°C,100kHz	-10°C,100kHz
27	5X11	238	0.34	1.18
56	6.3X11	385	0.14	0.50
100	8X11.5	724	0.074	0.22
120	8X16	950	0.061	0.18
150	10X12.5	979	0.061	0.18
180	8X20	1190	0.046	0.14
220	10X16	1370	0.042	0.12
270	10X20	1580	0.030	0.090
330	10X23	1870	0.028	0.085
470	12.5X20	2050	0.027	0.068
560	12.5X25	2410	0.023	0.059
680	12.5X30	2860	0.021	0.052
820	12.5X35	2960	0.019	0.051
820	16X20	2730	0.023	0.059
1000	16X25	3010	0.021	0.056

Rated voltage 63V (1J)				
Nominal capacitance (μF)	Size φDxL(mm)	Ripple Current (mA r.m.s./105°C,100kHz)	Impedance (ΩMAX)	
			20°C,100kHz	-10°C,100kHz
18	5X11	173	0.88	3.5
47	6.3X11	278	0.35	1.4
82	8X11.5	525	0.22	0.88
100	8X16	688	0.16	0.64
120	10X12.5	725	0.15	0.60
150	8X20	861	0.12	0.48
180	10X16	998	0.11	0.44
270	10X20	1200	0.078	0.31
270	12.5X16	1200	0.082	0.27
330	10X23	1410	0.069	0.28
390	12.5X20	1570	0.060	0.19
470	12.5X25	1990	0.043	0.14
560	12.5X30	2410	0.035	0.13
560	16X20	2100	0.043	0.14
680	12.5X35	2620	0.033	0.11
820	12.5X40	2940	0.027	0.090
820	16X25	2730	0.032	0.096
820	18X20	2500	0.038	0.10
1200	16X31.5	2990	0.024	0.068
1200	18X25	2800	0.031	0.084
1500	16X35.5	3040	0.021	0.057
1500	18X31.5	3300	0.025	0.068
1800	16X40	3570	0.019	0.057
1800	18X35.5	3570	0.020	0.054
2200	18X40	3670	0.018	0.049

Rated voltage 80V (1K)				
Nominal capacitance (μF)	Size φDxL(mm)	Ripple Current (mA r.m.s./105°C,100kHz)	Impedance (ΩMAX)	
			20°C,100kHz	-10°C,100kHz
12	5X11	163	1.40	5.6
33	6.3X11	267	0.57	2.3
56	8X11.5	462	0.36	1.4
68	8X16	585	0.25	1.0
82	10X12.5	624	0.23	0.96
100	8X20	735	0.19	0.76
120	10X16	780	0.17	0.72
180	10X20	1040	0.12	0.52
180	12.5X16	975	0.13	0.43
220	10X23	1170	0.11	0.47
270	12.5X20	1430	0.085	0.31
330	12.5X25	1620	0.060	0.23
390	12.5X30	1950	0.051	0.21
390	16X20	1750	0.058	0.21
470	12.5X35	2140	0.043	0.17
560	12.5X40	2340	0.036	0.15
560	16X25	2210	0.044	0.16
560	18X20	1950	0.054	0.18
680	16X31.5	2400	0.033	0.12
820	16X35.5	2600	0.029	0.10
820	18X25	2270	0.038	0.13
1000	16X40	2860	0.027	0.090
1000	18X31.5	2470	0.031	0.11
1200	18X35.5	2860	0.027	0.084
1500	18X40	3510	0.026	0.076

Rated voltage 100V (2A)				
Nominal capacitance (μF)	Size φDxL(mm)	Ripple Current (mA r.m.s./105°C,100kHz)	Impedance (ΩMAX)	
			20°C,100kHz	-10°C,100kHz
8.2	5X11	163	1.40	5.6
18	6.3X11	267	0.57	2.3
33	8X11.5	462	0.36	1.4
47	8X16	585	0.25	1.0
56	10X12.5	624	0.23	0.96
68	8X20	735	0.19	0.76
82	10X16	780	0.17	0.72
100	10X20	1040	0.12	0.52
100	12.5X16	975	0.13	0.43
120	10X23	1170	0.11	0.47
150	12.5X20	1430	0.085	0.31
220	12.5X25	1620	0.060	0.23
270	12.5X30	1950	0.051	0.21
270	16X20	1750	0.058	0.21
330	12.5X35	2140	0.043	0.17
390	12.5X40	2340	0.036	0.15
390	16X25	2210	0.044	0.16
390	18X20	1950	0.054	0.18
470	16X31.5	2400	0.033	0.12
470	18X25	2270	0.038	0.13
560	16X35.5	2600	0.029	0.10
560	18X31.5	2470	0.031	0.11
680	16X40	2860	0.027	0.090
680	18X35.5	2860	0.027	0.084
820	18X40	3510	0.026	0.076

CODE : T8 (Positive leading)

LEAD TYPE (DIA. ϕ10) < L≥9 >

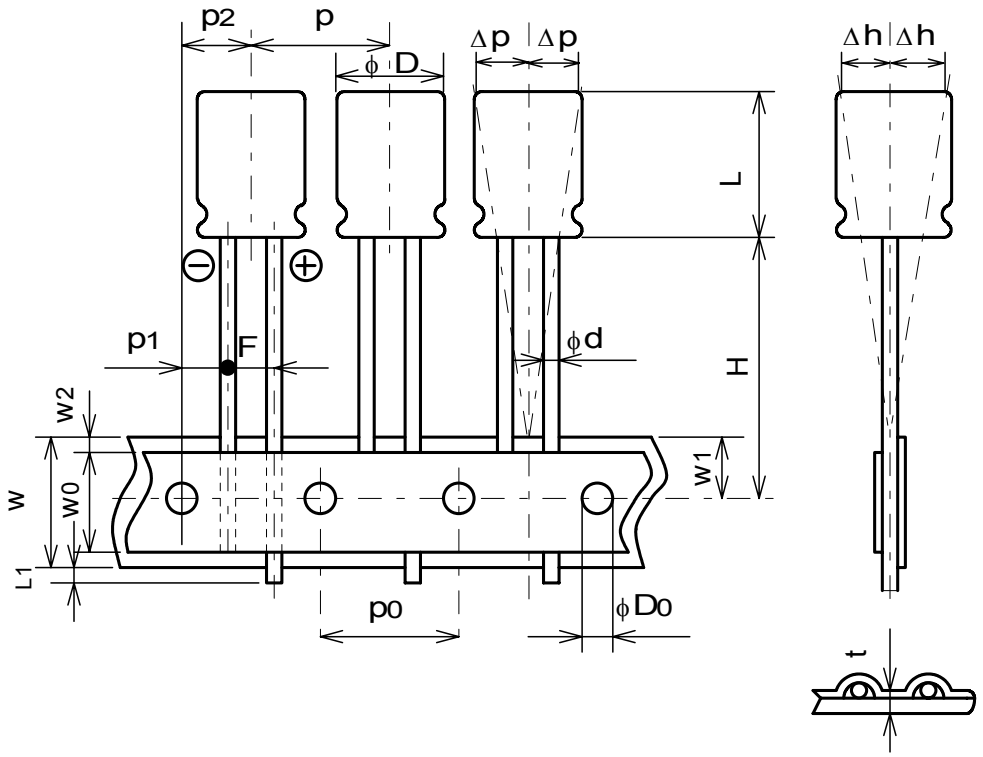

Symbol	Case Dia ϕ mm ϕ10		Remarks
ϕd	0.6	±0.05	Dia of lead
L	30.0	MAX	Height of body
P	12.7	±1.0	Distance from center to center of body
P_0	12.7	±0.2	Distance from center to center of driving hole
P1	3.85	±0.5	Distance between center of driving hole and lead
P2	6.35	±1.0	Distance between center of driving hole and body
F	5.0	±0.8	Lead spacing
W	18.0	±0.3	Width of mounting tape
W_0	5.0	MIN	Width of adhesive tape
W1	9.0	±0.5	Distance between center of driving hole and edge of mounting tape
W2	1.5	MAX	Max. allowable distance between mount and adhesive tape side
H	18.5	$^{+0.75}_{-0.5}$	Distance between center of driving hole and bottom of body
L1	0.5	MAX	Protrusion of lead
ϕD_0	4.0	±0.2	Dia. of driving hole
Δh	1.0	MAX	Off alignment of body
Δp	1.0	MAX	Off alignment of body
t	0.6	±0.3	Sum of thickness for mounting and adhesive tape without lead dia.