Messrs. ALMAR ENTERPRISES CO., LTD

ALUMINUM ELECTROLYTIC CAPACITORS SPECIFICATION SHEET

RoHS Compliance: Halogen free

CUSTOMER PART No.		
Rubycon PART No.	YXJ SERIES	
DRAWING No.	RER – 206871	ISSUE No. 3
ISSUE DATE	17 August 2022	

RUBYCON CORPORATION
ENGINEERING DIVISION

1938-1, NISHIMINOWA, INA-SHI, NAGANO-KEN, JAPAN
TEL No. 0265-72-7116
FAX No. 0265-73-3380

DESIGN	HIROKI KOMATSU
CHECK	YUSUKE MATSUZAKI
APPROVAL	TOSHIHIRO KOIKE

REVISIONS

1st. ISSUE	24 April 2018

ISSUE No.	REVISION MARK	DATE	DESCRIPTION	CH.	APP.
2		10 Apr. 2020	•Added Taping.	K.Y.	Y.S.
3		17 Aug. 2022	•Added "Halogen free" to Cover Sheet, and Halogen free Specification •Added Packing Specification	Y.M.	T.K.

Rubycon Aluminum electrolytic capacitors Specification Sheet
YXJ SERIES

Drawing No. : RER-206871
Issue No. : 3

1.Scope.
This specification covers polarized aluminum electrolytic capacitors with non-solid electrolyte for use in electronic equipments.

2. Reference Standard
JIS C 5141 (1991) and JIS C 5102 (1994) methods for testing.

3. Operating Temperature Range
-40°C to +105°C

4. Performance Refer to Table-2

5. Style and Numbering System
(1) Style CE 04 (Radial Leaded)

(2) Numbering System

Rated Voltage	Series	Nominal Capacitance	Tolerance	Lead Forming	Case size
□□□	YXJ	□□□	M	□□	□□□ X □□□

6. Marking
Unless otherwise specified, capacitor shall be clearly marked the following items on its body.
Sleeve color: Black
Lettering color: White

(1) Trade mark	Rubycon
(2) Rated Voltage	V
(3) Nominal Capacitance	μF
(4) Polarity	(Negative Polarity)
(5) Series	YXJ
(6) Lot Number	
(7) Maximum Operating Temperature	105°C
(8) PET Sleeve mark	PET

7. Vent
On capacitors whose diameter is 6.3mm and greater, a safety vent shall be provided.

8. Diagram of dimensions. :unit mm

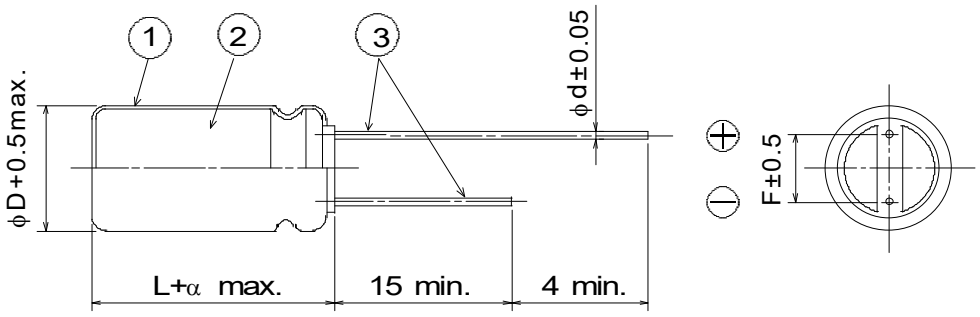

φD	5	6.3	8	10	12.5	16
F	2.0	2.5	3.5	5.0	5.0	7.5
φd	0.5	0.5	0.6	0.6	0.6	0.8
α	L≤16 : α=1.5 L≥20 : α=2.0					

①	Sleeve	P.E.T.
②	Case	Aluminum
③	Lead Wire	Tin plated

9. Standard size

♦Table-1 Standard size, Rated ripple current and Impedance

Rated voltage 6.3V				
capacitance	Size	Ripple Current	Impedance (ΩMAX)	
(μF)	φDxL(mm)	(mA r.m.s./105°C,100kHz)	20°C,100kHz	-10°C,100kHz
100	5X11	150	0.90	3.6
220	5X11	250	0.40	1.2
330	6.3X11	340	0.22	0.87
470	6.3X11	400	0.22	0.87
1000	8X11.5	640	0.13	0.52
2200	10X16	1300	0.062	0.25
3300	10X20	1400	0.046	0.18
4700	12.5X25	2230	0.032	0.11
6800	12.5X25	2230	0.032	0.11
10000	16X25	2930	0.021	0.060
15000	16X35.5	3610	0.015	0.044

Rated voltage 10V				
capacitance	Size	Ripple Current	Impedance (ΩMAX)	
(μF)	φDxL(mm)	(mA r.m.s./105°C,100kHz)	20°C,100kHz	-10°C,100kHz
100	5X11	150	0.90	3.6
220	5X11	250	0.40	1.2
330	6.3X11	400	0.22	0.87
470	6.3X11	400	0.22	0.87
1000	10X12.5	865	0.080	0.32
2200	10X20	1400	0.046	0.18
3300	12.5X20	1900	0.041	0.14
4700	12.5X25	2230	0.032	0.11
6800	16X25	2930	0.021	0.060
10000	16X31.5	3450	0.019	0.056

Rated voltage 16V				
capacitance	Size	Ripple Current	Impedance (ΩMAX)	
(μF)	φDxL(mm)	(mA r.m.s./105°C,100kHz)	20°C,100kHz	-10°C,100kHz
47	5X11	250	0.40	1.2
100	5X11	250	0.40	1.2
220	6.3X11	400	0.22	0.87
330	6.3X11	400	0.22	0.87
470	8X11.5	640	0.13	0.52
1000	10X16	1210	0.062	0.25
2200	12.5X20	1900	0.041	0.14
3300	12.5X25	2230	0.032	0.11
4700	16X25	2930	0.021	0.060
6800	16X31.5	3450	0.019	0.056

Rated voltage 25V				
capacitance	Size	Ripple Current	Impedance (ΩMAX)	
(μF)	φDxL(mm)	(mA r.m.s./105°C,100kHz)	20°C,100kHz	-10°C,100kHz
33	5X11	250	0.40	1.2
47	5X11	250	0.40	1.2
100	5X11	250	0.40	1.2
220	6.3X11	400	0.22	0.87
330	8X11.5	640	0.13	0.52
470	10X12.5	865	0.080	0.32
1000	10X20	1400	0.046	0.18
2200	12.5X25	2230	0.032	0.11
3300	16X25	2930	0.021	0.060
4700	16X31.5	3450	0.019	0.056

Rubycon Aluminum electrolytic capacitors Specification Sheet YXJ SERIES

Drawing No. : RER-206871

Issue No. : 3

Rated voltage 35V				
capacitance (μF)	Size φDxL(mm)	Ripple Current (mA r.m.s./105°C,100kHz)	Impedance (ΩMAX)	
			20°C,100kHz	-10°C,100kHz
33	5X11	250	0.40	1.2
47	5X11	250	0.40	1.2
100	6.3X11	400	0.22	0.87
220	8X11.5	640	0.13	0.52
330	10X12.5	865	0.080	0.32
470	10X16	1210	0.062	0.25
1000	12.5X20	1900	0.041	0.14
2200	16X25	2930	0.021	0.060
3300	16X31.5	3450	0.019	0.056

Rated voltage 50V				
capacitance (μF)	Size φDxL(mm)	Ripple Current (mA r.m.s./105°C,100kHz)	Impedance (ΩMAX)	
			20°C,100kHz	-10°C,100kHz
1	5X11	30	4.0	8.0
2.2	5X11	43	2.5	6.0
3.3	5X11	53	2.2	5.6
4.7	5X11	88	1.9	5.0
10	5X11	100	1.5	4.0
22	5X11	180	0.70	2.8
33	5X11	250	0.70	2.8
47	6.3X11	295	0.30	1.2
100	8X11.5	555	0.17	0.68
220	10X16	1050	0.084	0.34
330	10X20	1220	0.060	0.24
470	12.5X20	1660	0.045	0.15
1000	16X25	2730	0.032	0.096
2200	16X35.5	3150	0.019	0.057

Rated voltage 63V				
capacitance (μF)	Size φDxL(mm)	Ripple Current (mA r.m.s./105°C,100kHz)	Impedance (ΩMAX)	
			20°C,100kHz	-10°C,100kHz
10	5X11	173	0.88	3.5
22	5X11	173	0.88	3.5
33	6.3X11	278	0.35	1.4
47	6.3X11	278	0.35	1.4
100	10X12.5	725	0.15	0.60
220	10X20	1200	0.078	0.31
330	12.5X20	1570	0.060	0.19
470	12.5X25	1990	0.043	0.14
1000	16X25	2730	0.032	0.096

Rated voltage 100V				
capacitance (μF)	Size φDxL(mm)	Ripple Current (mA r.m.s./105°C,100kHz)	Impedance (ΩMAX)	
			20°C,100kHz	-10°C,100kHz
1	5X11	20	4.5	15.0
2.2	5X11	30	3.0	13.0
3.3	5X11	40	2.7	11.0
4.7	5X11	65	2.5	10.0
10	6.3X11	267	0.57	2.3
22	6.3X11	267	0.57	2.3
33	8X11.5	462	0.36	1.4
47	8X16	585	0.25	1.0
100	10X20	1040	0.12	0.52
220	12.5X25	1620	0.060	0.23
330	16X25	2210	0.044	0.16

♦Table-2 PERFORMANCE

	ITEMS	PERFORMANCE
1	Rated Voltage(WV) Surge Voltage (SV)	<table><tr><td>WV(V.DC)</td><td>6.3</td><td>10</td><td>16</td><td>25</td><td>35</td><td>50</td><td>63</td><td>100</td></tr><tr><td>SV(V.DC)</td><td>8</td><td>13</td><td>20</td><td>32</td><td>44</td><td>63</td><td>79</td><td>125</td></tr></table>
2	Capacitance (Tolerance)	<Condition> Measuring Frequency : 120Hz±20% Measuring Voltage : Not more than 0.5Vrms Measuring Temperature : 20 ± 2 °C <Criteria> 1 to 15000μF (±20%)
3	Leakage Current	<Condition> The rated voltage shall be applied between terminals of capacitor such that the terminal voltage will reach the rated voltage within one minute and the leakage current shall be measured at 2 minutes after the voltage has reached the rated voltage across a 1000 ±10 Ω series protection resister. Then the current value shall not exceed value calculated from following formula. <Criteria> I=0.01CV or 3μA whichever is greater where I : Leakage current in μA. C : Nominal capacitance in μF. V : Rated voltage in V.DC.
4	Dissipation Factor (tanδ:Tangent of loss angle)	<Condition> See ITEM 2, Nominal Capacitance, for measuring frequency, voltage and temperature. <Criteria> <table><tr><td>WV(V.DC)</td><td>6.3</td><td>10</td><td>16</td><td>25</td><td>35</td><td>50</td><td>63</td><td>100</td></tr><tr><td>tanδ</td><td>0.22</td><td>0.19</td><td>0.16</td><td>0.14</td><td>0.12</td><td>0.10</td><td>0.09</td><td>0.08</td></tr></table> When nominal capacitance is over 1000μF, tanδ shall be added 0.02 to the listed value with increase of every 1000μF.
5	Terminal Strength	<Condition> ·Tensile Strength of Terminals The body of capacitor shall be fixed and the tensile force of following table shall be applied to the terminal in lead out direction of the terminal for 10±1 seconds. ·Bending Strength of Terminals The body of capacitor shall be held in such a way that the regular lead-out axis of lead wire terminal becomes vertical. The weight of following table shall be suspended from the end of terminal. In this condition, after the body of sample is bent through 90 degrees, it shall be returned to the original position. Next the body shall be reversibly bent through 90 degrees and again returned to the original position. <table><tr><td>Diameter of lead wire</td><td>Tensile force N{kgf}</td><td>Bending force N{kgf}</td></tr><tr><td>0.5mm and less</td><td>5{0.51}</td><td>2.5{0.25}</td></tr><tr><td>Over 0.5mm to 0.8mm incl</td><td>10{1.0}</td><td>5 {0.51}</td></tr></table> <Criteria> Notable changes shall not be found, as breakage or looseness in the terminal.

6 Temperature Coefficient and Drift

<Condition>

STEP	Testing Temperature (°C)	Time
1	20±2	Time to reach thermal equilibrium
2	-40±3	
3	-25±3	
4	20±2	
5	105±2	
6	20±2	

Capacitance, D.F. and Impedance shall be measured at 120Hz.

<Criteria>

STEP 2,3	Impedance Ratio	The value of ratio to STEP 1 not more than value of following table.
STEP 5	Capacitance Change	Within ±25% of the value of STEP 1
	Dissipation Factor	Not more than the specified value
	Leakage Current	Not more than 8 times the specified value
STEP 6	Capacitance Change	Within ±10% of the value of STEP 1
	Dissipation Factor	Not more than the specified value
	Leakage Current	Not more than the specified value

WV(V.DC)	6.3	10	16	25	35	50	63	100
Z(-25°C)/Z(+20°C)	4	3	2	2	2	2	2	2
Z(-40°C)/Z(+20°C)	8	6	4	3	3	3	3	3

7 Load Life Test

<Condition>

Capacitor under the test shall be applied the rated voltage continuously through 1000 Ω series protective resistor (with rated ripple current) at 105±2°C for following test period. After the test and returned in standard condition for 1 to 2 hours, and the capacitor shall meet following requirements.

Case dia	Life time	
	6.3 to 10WV	16 to 100WV
φ5	$4000\ ^{+72}_{0}$	$5000\ ^{+72}_{0}$
φ6.3,φ8	$6000\ ^{+72}_{0}$	$7000\ ^{+72}_{0}$
φ10 to φ16	$8000\ ^{+72}_{0}$	$10000\ ^{+72}_{0}$

<Criteria>

Leakage Current	Not more than the specified value
Capacitance Change	Within ±25% of the initial value. (6.3V: ±30%)
Dissipation Factor	Not more than 200% of the specified value
Appearance	Notable changes shall not be found, except sleeve

8	Shelf Life Test	<Condition> Capacitors shall be stored at 105±2°C with no voltage applied for 1000^{+48}_{0} hours. After the test and returned in standard condition for 1 to 2 hours and the capacitor shall meet following requirements. (If any doubt arises on the judgment, the capacitors shall be subjected to voltage treatment specified in JIS C 5141,5.2.) <Criteria> Leakage Current: Not more than the specified value Capacitance Change: Within ±25% of the initial value Dissipation Factor: Not more than 200% of the specified value Appearance: Notable changes shall not be found
9	Surge Voltage	<Condition> Capacitor shall be applied the surge voltage through a (100±50)/C ［kΩ］ resistor in series for 30±5 seconds in every 6±0.5 minutes at 15 to 35°C. Procedure shall be repeated 1000 times. Then the capacitors shall be left under normal humidity for 1 to 2 hours before measurement. ［C : Nominal Capacitance (μF)］ <Criteria> Leakage Current: Not more than the specified value Capacitance Change: Within ±15% of the initial value Dissipation Factor: Not more than the specified value Appearance: Notable changes shall not be found ◊This test simulates over voltage at abnormal situations, and not be hypothesizing that over voltage is always applied.
10	Vibration Test	<Condition> Testing shall be done out in 3 AXIS for 2 hours each (total 6 hours) as below. Fix lead wire at a point not more than 4mm from the body , use mounting device separately for the one with a diameter 12.5mm and greater or with a length 25mm and longer. Vibration frequency range : 10 to 55Hz Peak to peak amplitude : 1.5mm Sweep rate : 10 to 55 to 10Hz, In about 1min. <Criteria> Capacitance Change: Within ±5% of the initial value Appearance: Notable changes shall not be found
11	Solderability	<Condition> Terminals of the capacitor shall be immersed in flux (ethanol solution of the rosin, 25 wt% rosin) and shall be immersed in the solder bath (Sn96.5Ag3.0Cu0.5, 245±3°C) and held for 3±0.3 seconds, and pulled out at the same speed. <Criteria> At least over 95% of circumferential surface of dipped portion of the terminal shall be covered with new solder.

12 Resistance to Solder Heat

<Condition>
Terminals of the capacitor shall be immersed into solder bath at 260±5°C for 10±1 seconds up to 1.5 to 2.0mm from the body of capacitor.
Then the capacitors shall be left under the normal temperature and normal humidity for 1 to 2 hours before measurement.

<Criteria>

Leakage Current	Not more than the specified value
Capacitance Change	Within ±10% of the initial value
Dissipation Factor	Not more than the specified value
Appearance	Notable changes shall not be found

13 Resistance to Damp Heat (Steady State)

<Condition>
Capacitor shall be stored in the ambient of 40±2°C and relative humidity 90 to 95% for 240±8 hours.
Then the capacitors shall be left under the normal temperature and normal humidity for 1 to 2 hours before measurement.

<Criteria>

Leakage Current	Not more than the specified value
Capacitance Change	Within ±15% of the initial value
Dissipation Factor	Not more than the specified value
Appearance	Notable changes shall not be found

14 Rated Ripple Current

(1)The rated ripple current is the maximum A.C. current at 100kHz and can be applied at maximum operating temperature.
(2)The combined value of D.C. voltage and the peak A.C. voltage shall not exceed the rated voltage and shall not be reverse voltage.

<Frequency Coefficient>
•6.3 ~ 50WV

Frequency(Hz)		120	1k	10k	100k≤
Coefficient	1	0.35	0.60	0.80	1.00
	2.2 to 10	0.42	0.60	0.80	1.00
	22 to 47	0.55	0.75	0.90	1.00
	100 to 330	0.70	0.85	0.95	1.00
	470 to 1000	0.75	0.90	0.98	1.00
	2200 to 15000	0.80	0.95	1.00	1.00

•63 ~ 100WV

Frequency(Hz)	120	1k	10k	100k≤
Coefficient	0.42	0.60	0.80	1.00

< Temperature Coefficient >

Ambient Temperature(°C)	105	85	65≥
Coefficient	1.0	1.7	2.1

◊Temperature coefficient shows a limit of ripple current exceeding the rated ripple current that can be passed through a capacitor at each temperature when the life expectancy of a capacitor becomes to be nearly equal with the lifetime at the rated maximum operating temperature.
◊Use of aluminum electrolytic capacitor under ripple voltage with wide amplitude is equivalent to quick charge-discharge operation.
When ripple voltage with the amplitude over 70Vp-p is expected for the products with rated voltage over 100V, please contact us.

10. Packing Specification
Curton box quantity (Inner curton)

D×L(mm)	Long Lead		Taping	
	Quantity (pcs/box)	Dimensions WXDXH(mm)	Quantity (pcs/box)	Dimensions WXDXH(mm)
5X11	3,000	235X175X115	2,000	335X50X220
6.3X11	2,000	235X175X115	2,000	335X50X275
8X11.5	2,000	235X175X115	1,000	335X50X240
8X16	1,000	235X175X115	1,000	335X55X240
10X12.5	1,000	235X175X115	500	335X50X190
10X16	1,000	235X175X115	500	335X55X190
10X20	1,000	235X175X165	500	335X55X190
12.5X20	1,000	270X240X160	500	335X60X280
12.5X25	1,000	270X240X160	500	335X60X280
16X25	600	270X240X160	250	340X60X235
16X31.5	200	205X350X80	250	335X65X230
16X35.5	200	205X350X80	250	335X70X230

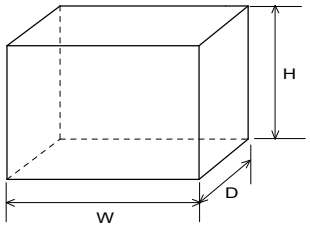

11. Halogen free specification

All homogeneous materials within capacitor shall meet the criteria in the following table. A homogeneous material has uniform composition throughout and cannot be mechanically disjointed into different materials.

Substances	Permissible Limit (by weight)
Bromine (Br)	≤900 ppm
Chlorine (Cl)	≤900 ppm
Total concentration of Br+Cl	≤1500 ppm

Notes on use of aluminum electrolytic capacitors

(1) Charge and discharge

Do not use for the circuit that repeats quick charge or discharge.

(2) External stress

Do not apply excessive force of pushing, pulling bending, and/or twisting to the main body, lead wire and terminals.

(3) Heat resistance at soldering process

In the soldering process of PC board with Capacitors mounted, secondary shrinkage or crack of sleeve may be observed when soldering temperature is too high and /or soldering time is too long.

If lead wire of other components or pattern of double sided PC board touches the capacitor, the similar failure may be also originated at pre-heating, heating at hardening process of adhesive and soldering process.

(4) Insulation and PC board mounting

Sleeve is for marking purpose only.

It is not recognized as insulation materials.

When double sided PC board is employed, note that it could cause a short circuit if lead wire of other components or pattern of double sided PC board touches capacitor. Please avoid circuit pattern runs underneath capacitor.

In addition, case and cathode terminal are not insulated.

(5) Adhesives and coating materials

Do not use the adhesives and coating materials that contain halogenated organic solvents or chloroprene as polymer.

(6) Storage

Keep at a normal temperature and humidity. During a long storage time, leakage current will be increased. To prevent heat rise or any trouble that high leakage current possibly causes, voltage treatment is recommended for the capacitors that have been stored for a long time.

<Storage Condition>

・Do not keep Aluminum Electrolytic Capacitors in hot and/or humid atmosphere. Recommended storage condition is 5℃-35℃in temperature and not higher than 75% in relative humidity.

・Do not keep Aluminum Electrolytic Capacitors in a condition where spray of water, saltwater or oil is expected.

・Do not store Aluminum Electrolytic Capacitors in an environment full of hazardous gas (e.g. hydrogen sulfide, sulfurous acid gas, nitrous acid, chlorine gas, ammonia, bromine gas, methyl bromide).

・Do not keep Aluminum Electrolytic Capacitors under exposure to ozone, ultraviolet rays or radiation.

・Do not keep Aluminum Electrolytic Capacitors under exposure to acid or alkaline environment.

(7) Fumigation and halogenated flame retardant

It may cause corrosion of internal electrodes, aluminum cases and terminal surface when the following conditions exist.

・Fumigation of wooden pallets before shipment to disinfect vermin.

・Existence of components or parts that contain halogenated flame retardant agent (bromine etc.) together with capacitors.

・When halogenated detergents of antiseptics for preventing infection of epidemic diseases contact directly to capacitors.

(8) PC board cleaning after soldering

Please consult us when cleaning is subjected.

*Guide to application except the above are described in our catalog and JEITA RCR-2367D (including any amendments).
JEITA RCR-2367D : "Safety application guide for fixed aluminum electrolytic capacitors for use in electronic equipment."
Published by Japan Electronics and Information Technology Industries Association.

•TAPING SPECIFICATION OF RADIAL LEAD TYPE ALUMINUM ELECTROLYTIC CAPACITORS

1.Scope

This specification covers taped radial lead type electrolytic capacitors, with case dia of ϕ 5 ~ ϕ 16 mm.

2.Requirements.

2-1. Body tape requirements are shown in 12/18 ~ 18/18 page.
2-2. All polarized capacitors must be oriented in one direction.
2-3. Leader tape shall be provided before the first capacitor and after the last one on tape at minimum length of 3 feed holes.
2-4 Maximum of 3 consecutive missing capacitors are permitted while one pack quantity meets the specification in para.4.
2-5. Mounting tape shall be spliced as shown in Fig.1. Mounting tape shall not be over lapped.

Fig.1

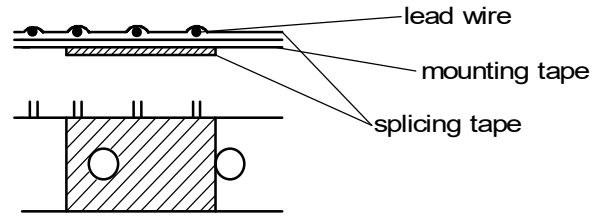

connection of mounting tape

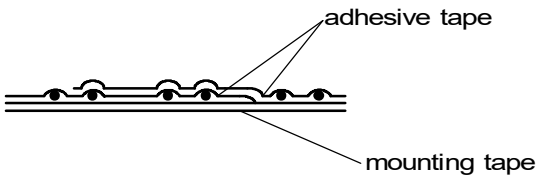

connection of adhesive tape

2-6. Defective capacitors shall be pulled out or clipped from the mounting tape.
Remaining protrusion of the leads shall not exceed 2mm from edge of the tape, when clipped.

3. Adhesion test of mounting tape

3-1. Adhesive tape on the mounting tape shall not a tear off at the force of less than 3N {0.3kgf} when tested in a manner shown in Fig.2.
3-2. Capacitors shall not be pulled out of the tape with a following load applied to the capacitor body in a manner shown in Fig.3.

Dia $\leq \phi$ 8mm 10N {1.0kgf}
Dia $\geq \phi$ 10mm 5N {0.5kgf}

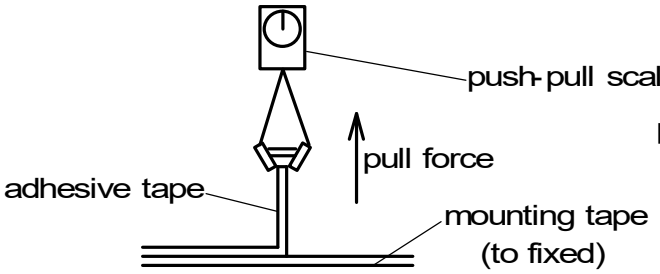

Fig.2

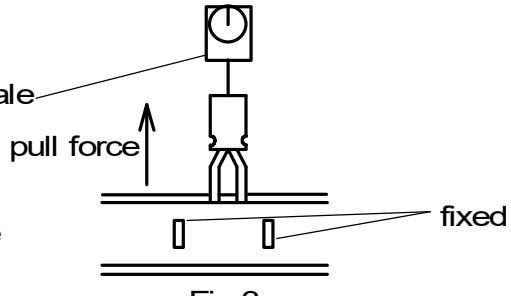

Fig.3

4.Package

Taped capacitors shall be packed in a carton shown in Fig.4, with tape ammunition.
Packed cartons shall be marked at least polarity, rated voltage, nominal capacitance and quantity.
On case dia ϕ10mm to ϕ16mm, one capacitor shall be removed at each bend of the tape.

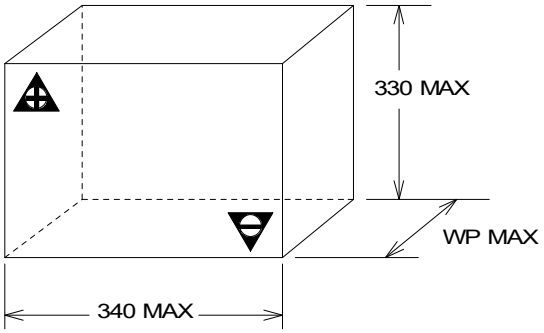

Fig.4

STANDARD PACKING QUANTITY

CASE DIA	QUANTITY	WP(mm)
ϕ5,ϕ6.3 X 11L	2000	54
ϕ8X11.5L	1000	54
ϕ8X16L	1000	65
ϕ10X12.5L	500	60
ϕ10X16L	500	65
ϕ10X20L	500	70
ϕ12.5X20L ϕ12.5X25L	500	70
ϕ16X25L	250	75
ϕ16X31.5L ϕ16X35.5L	250	85

CODE : T1 (Positive leading)
LEAD TYPE (DIA. ϕ5)

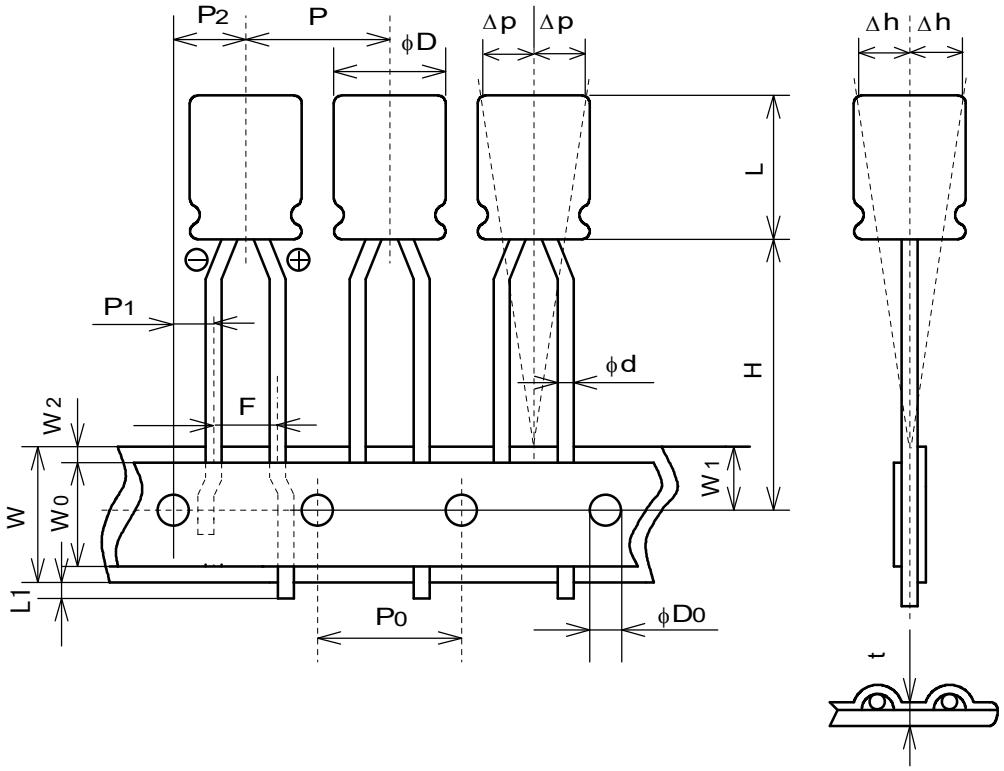

Symbol	Case Dia ϕ mm	Remarks
	ϕ5	
ϕd	0.5 ±0.05	Dia. of lead
P	12.7 ±1.0	Distance from center to center of next body
P_0	12.7 ±0.2	Distance from center to center of next driving hole
P1	5.1 ±0.5	Distance between center of driving hole and lead (at the upper edge of the carrier tape)
P2	6.35 ±1.0	Distance between center of driving hole and body
F	2.5 $^{+0.8}_{-0.2}$	Pitch of lead(at the upper edge of the carrier tape)
W	18 ±0.3	Width of mounting tape
W_0	5 MIN	Width of adhesive tape
W1	9 ±0.5	Distance between center of driving hole and mounting tape edge
W2	1.5 MAX	Max. allowable distance between mounting and adhesive tape edges
H	18.5 ±0.75	Distance between center of driving hole and bottom of body
L1	0.5 MAX	End of lead
ϕD_0	4 ±0.2	Dia. of driving hole
Δh	2 MAX	Off alignment of body top
Δp	1 MAX	Off alignment of body top
t	0.6 ±0.3	Sum of thickness for mounting and adhesive tape without lead dia.

CODE : T1 (Positive leading)
LEAD TYPE (DIA. ϕ6.3)

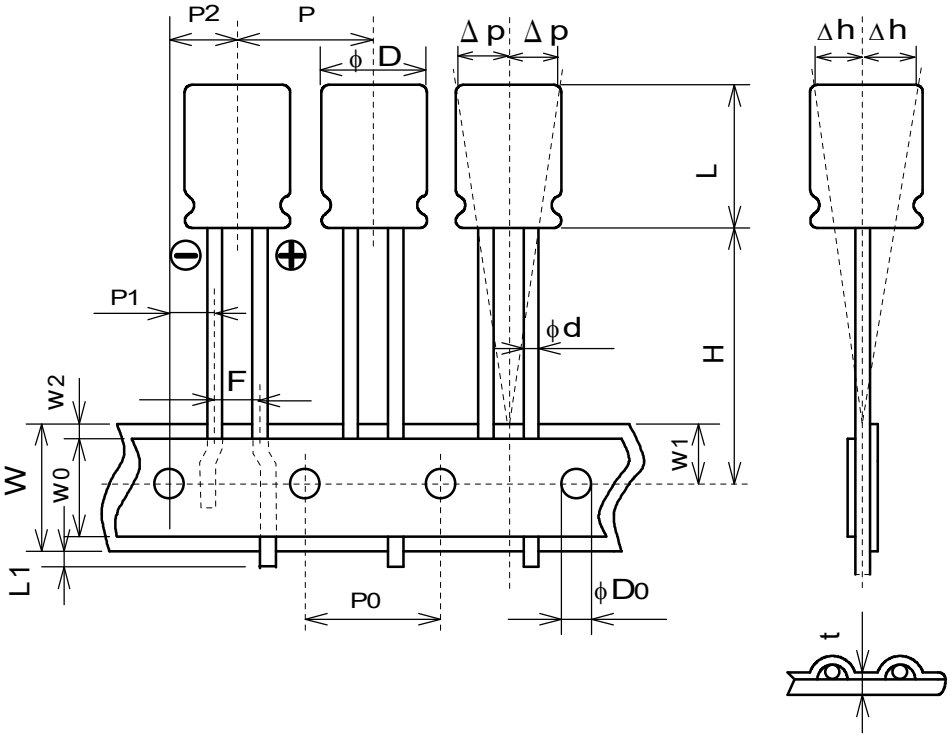

Symbol	Case Dia ϕ mm	Remarks
	ϕ6.3	
ϕd	0.5 ±0.05	Dia. of lead
P	12.7 ±1.0	Distance from center to center of next body
P_0	12.7 ±0.2	Distance from center to center of next driving hole
P1	5.1 ±0.5	Distance between center of driving hole and lead (at the upper edge of the carrier tape)
P2	6.35 ±1.0	Distance between center of driving hole and body
F	2.5 $^{+0.8}_{-0.2}$	Pitch of lead(at the upper edge of the carrier tape)
W	18 ±0.3	Width of mounting tape
W_0	5 MIN	Width of adhesive tape
W1	9 ±0.5	Distance between center of driving hole and mounting tape edge
W2	1.5 MAX	Max. allowable distance between mounting and adhesive tape edges
H	18.5 ±0.75	Distance between center of driving hole and bottom of body
L1	0.5 MAX	End of lead
ϕD_0	4 ±0.2	Dia. of driving hole
Δh	2 MAX	Off alignment of body top
Δp	1 MAX	Off alignment of body top
t	0.6 ±0.3	Sum of thickness for mounting and adhesive tape without lead dia.

CODE : T7 (Positive leading)
LEAD TYPE (DIA. ϕ8)

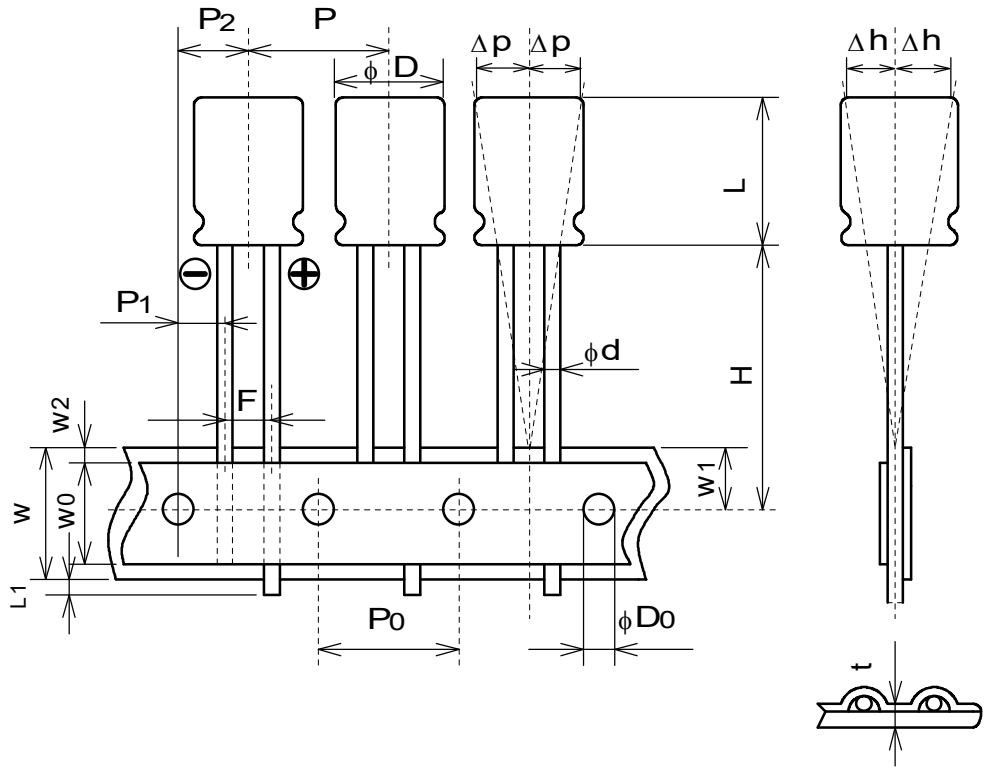

Symbol	Case Dia ϕ mm	Remarks
	ϕ8	
ϕd	0.6 ±0.05	Dia. of lead
P	12.7 ±1.0	Distance from center to center of next body
P_0	12.7 ±0.2	Distance from center to center of next driving hole
P1	4.6 ±0.5	Distance between center of driving hole and lead (at the upper edge of the carrier tape)
P2	6.35 ±1.0	Distance between center of driving hole and body
F	3.5 $^{+0.8}_{-0.2}$	Pitch of lead(at the upper edge of the carrier tape)
W	18 ±0.3	Width of mounting tape
W_0	5 MIN	Width of adhesive tape
W1	9 ±0.5	Distance between center of driving hole and mounting tape edge
W2	1.5 MAX	Max. allowable distance between mounting and adhesive tape edges
H	20 ±0.75	Distance between center of driving hole and bottom of body
L1	0.5 MAX	End of lead
ϕD_0	4 ±0.2	Dia. of driving hole
Δh	2 MAX	Off alignment of body top
Δp	1 MAX	Off alignment of body top
t	0.6 ±0.3	Sum of thickness for mounting and adhesive tape without lead dia.

CODE : TA (Positive leading)
LEAD TYPE (DIA. ϕ5 ~ ϕ8)

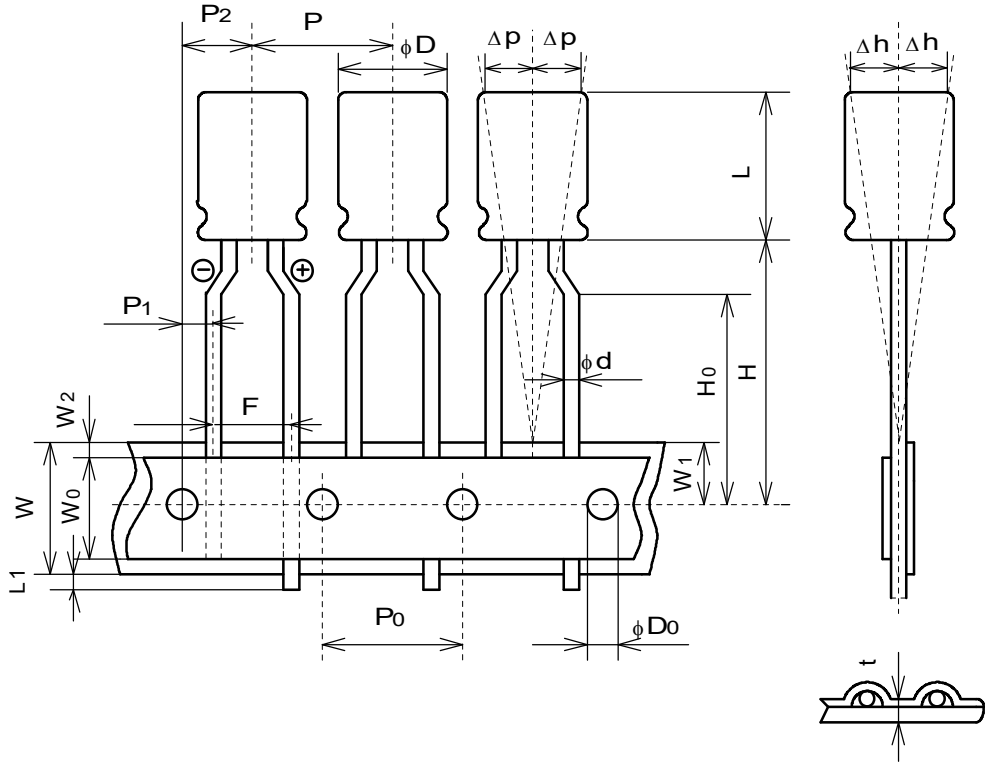

Symbol	Case Dia ϕ mm		Remarks
	ϕ5,ϕ6.3	ϕ8	
ϕd	0.5±0.05	0.6±0.05	Dia. of lead
P	12.7 ±1.0		Distance from center to center of next body
P_0	12.7 ±0.2		Distance from center to center of next driving hole
P1	3.85 ±0.5		Distance between center of driving hole and lead (at the upper edge of the carrier tape)
P2	6.35 ±1.0		Distance between center of driving hole and body
F	5 $^{+0.8}_{-0.2}$		Pitch of lead(at the upper edge of the carrier tape)
W	18 ±0.3		Width of mounting tape
W_0	5 MIN		Width of adhesive tape
W1	9 ±0.5		Distance between center of driving hole and mounting tape edge
W2	1.5 MAX		Max. allowable distance between mounting and adhesive tape edges
H	18.5±0.75	20±0.75	Distance between center of driving hole and bottom of body
H_0	16 ±0.5		End of lead
L1	0.5 MAX		Dia. of driving hole
ϕD_0	4 ±0.2		Off alignment of body top
Δh	2 MAX		Off alignment of body top
Δp	1 MAX		Sum of thickness for mounting and adhesive tape without lead dia.
t	0.6 ±0.3		Dia. of lead

CODE : T8 (Positive leading)
LEAD TYPE (DIA. ϕ10)

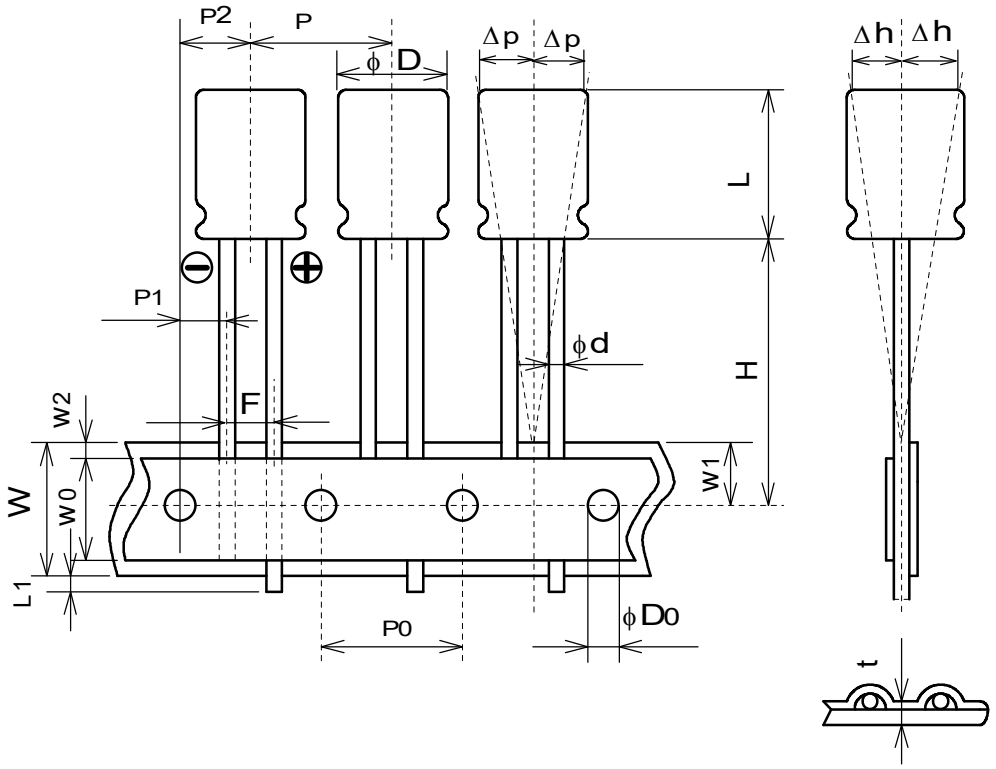

Symbol	Case Dia ϕ mm	Remarks
	ϕ10	
ϕd	0.6 ±0.05	Dia. of lead
P	12.7 ±1.0	Distance from center to center of next body
P0	12.7 ±0.2	Distance from center to center of next driving hole
P1	3.85 ±0.5	Distance between center of driving hole and lead (at the upper edge of the carrier tape)
P2	6.35 ±1.0	Distance between center of driving hole and body
F	5 ±0.8	Pitch of lead(at the upper edge of the carrier tape)
W	18 ±0.3	Width of mounting tape
W0	5 MIN	Width of adhesive tape
W1	9 ±0.5	Distance between center of driving hole and mounting tape edge
W2	1.5 MAX	Max. allowable distance between mounting and adhesive tape edges
H	18.5 $^{+0.75}_{-0.5}$	Distance between center of driving hole and bottom of body
L1	0.5 MAX	End of lead
ϕD0	4 ±0.2	Dia. of driving hole
Δh	2 MAX	Off alignment of body top
Δp	1 MAX	Off alignment of body top
t	0.6 ±0.3	Sum of thickness for mounting and adhesive tape without lead dia.

CODE : G4 (Positive leading)
LEAD TYPE (DIA. ϕ12.5)

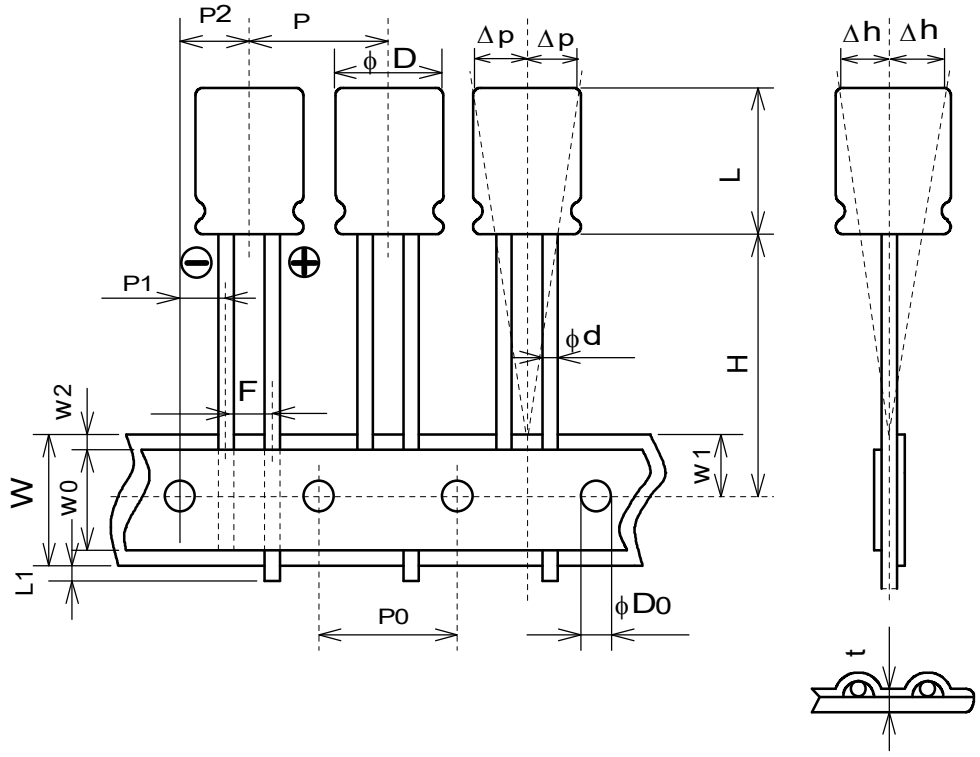

Symbol	Case Dia ϕ mm	Remarks
	ϕ12.5	
ϕd	0.6 ±0.05	Dia. of lead
P	15 ±1.0	Distance from center to center of next body
P_0	15 ±0.2	Distance from center to center of next driving hole
P1	5 ±0.5	Distance between center of driving hole and lead (at the upper edge of the carrier tape)
P2	7.5 ±1.0	Distance between center of driving hole and body
F	5 ±0.8	Pitch of lead(at the upper edge of the carrier tape)
W	18 ±0.3	Width of mounting tape
W_0	5 MIN	Width of adhesive tape
W1	9 ±0.5	Distance between center of driving hole and mounting tape edge
W2	1.5 MAX	Max. allowable distance between mounting and adhesive tape edges
H	18.5 $^{+0.75}_{-0.5}$	Distance between center of driving hole and bottom of body
L1	0.5 MAX	End of lead
ϕD_0	4 ±0.2	Dia. of driving hole
Δh	2 MAX	Off alignment of body top
Δp	1 MAX	Off alignment of body top
t	0.6 ±0.3	Sum of thickness for mounting and adhesive tape without lead dia.

CODE : GC (Positive leading)
LEAD TYPE (DIA. ϕ16)

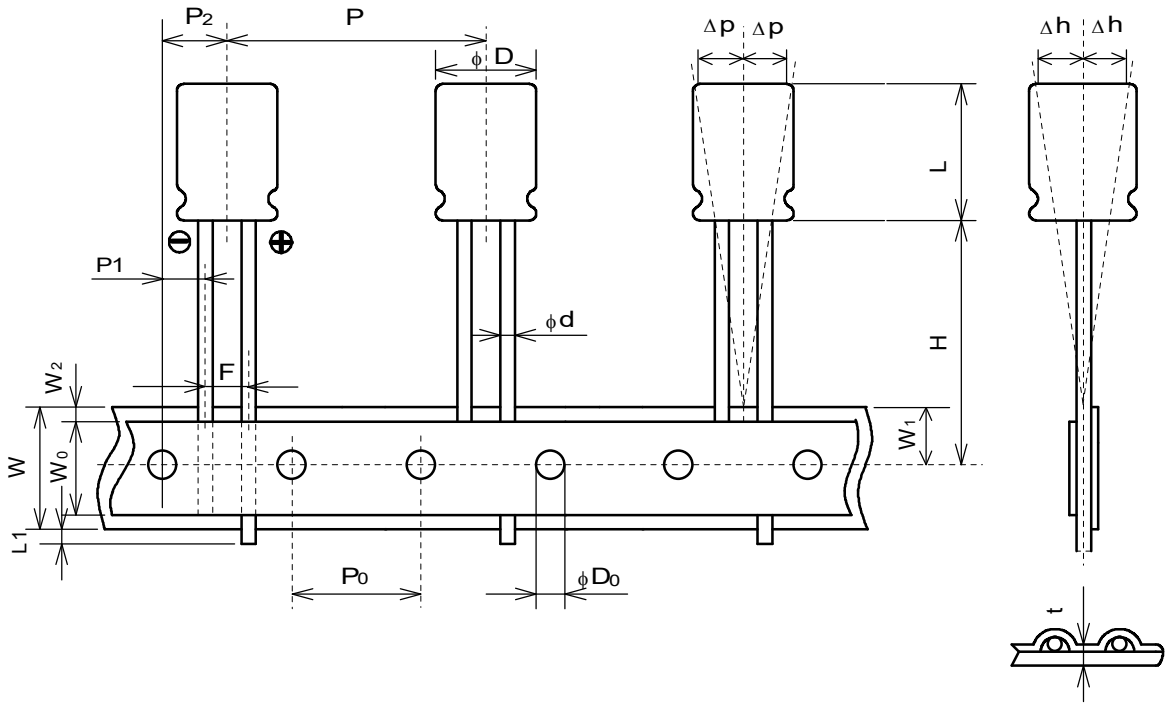

Symbol	Case Dia ϕ mm	Remarks
	ϕ16	
ϕd	0.8 ±0.05	Dia. of lead
P	30 ±1.0	Distance from center to center of next body
P_0	15 ±0.3	Distance from center to center of next driving hole
P1	3.75 ±0.5	Distance between center of driving hole and lead (at the upper edge of the carrier tape)
P2	7.5 ±1.0	Distance between center of driving hole and body
F	7.5 ±0.8	Pitch of lead(at the upper edge of the carrier tape)
W	18 ±0.3	Width of mounting tape
W_0	5 MIN	Width of adhesive tape
W1	9 ±0.5	Distance between center of driving hole and mounting tape edge
W2	1.5 MAX	Max. allowable distance between mounting and adhesive tape edges
H	18.5 $^{+0.75}_{-0.5}$	Distance between center of driving hole and bottom of body
L1	0.5 MAX	End of lead
ϕD_0	4 ±0.2	Dia. of driving hole
Δh	2 MAX	Off alignment of body top
Δp	1 MAX	Off alignment of body top
t	0.6 ±0.3	Sum of thickness for mounting and adhesive tape without lead dia.