



開發部
2023.07.19
發行
鈺鐘科技開發股份有限公司

Specification For Approval

承 認 書

客　　戶　（Customer）	鈺緯		
品　　名　（Product Name）	**Speaker Ass'y**		
機　　種　（Model No.）			
客戶料號（Customer Parts No.）	2AAD5390141 (T0197)		
供應商料號(Supplier Model No.)	**PB32KC04-1-7RZ**		
規格說明(Description)	**HSG:A1253HA-02P** **TER:A1253-TPE-A** **WIRE: UL1571 AWG28,OD=0.8mm,絞線**		
客戶承認簽章 Customer Approval Signature	**In Charge**	**Checked**	**Approval** 開發部 2023.07.19 發行

Revision History

Version	Date	Description	Author
00	2023/02/16	Release	DSY

❑紘立企業有限公司　*E-mail:* vecot@veco.com.tw
Vansonic Enterprise Co., Ltd.　Tel: +886-2-2267 2389　Fax: +886-2-2267 2588
✓佛山鋐利電子有限公司　*E-mail*: fsveco @veco.com.cn　*Office*: fs_sales@veco.com.cn
Vanson Electronics(Nanhai)Limited. Tel: +86-757-8126 6388　Fax: +86-757-8126 6389
❑鴻立電子上海有限公司　*E-mail*: vesf@shtel.net.cn　*Office*: vesi@shtel.net.cn
Vanson Electronics Shanghai Inc.　Tel: +86-21-5958 5999　Fax: +86-21-5958 5678
❑宏立電子 (合肥)有限公司 *E-mail*: reception@veco-hf.com
HeFei Vanson Electronics Inc.　Tel:　+ 86-551-568 9589　Fax: + 86-551-568 9593
❑重慶弘立電子有限公司　*E-mail*:ceng@veco.com.cn
Vanson Electronics (ChongQing)cn.,Ltd.　Tel: + 86-023-49521999　Fax:+ 86-023-49655990

Design： *杜少燕*　**Checked：** *曾憲財*　**Approval：** *高紅華*

不使用 1 級環境管理物質

Vanson Electronics(Nanhai) Co., Ltd.

Luocun Industrial zone Nanhai District Foshan city Guangdong Province China

TEL : + 86-757-8126 6388 FAX: + 86-757-8126 6389 E-mail: fsveco @veco.com.cn

SPEAKER WITH AUDIO BOX		MODEL No. : **PB32KC04-1-7RZ**
01	TYPE	SOUND BOX
02	DC RESISTANCE	**8** Ω ± 15 %
03	RESONANCE FREQUENCY	FO : **280** ± 20 % Hz.
04	SOUND PRESSURE LEVEL	**81** ± 3 db 1.0 Watt 0.5 Meter Measured by KLIPPEL At 800 1000 1200 1500 Hz Average
05	FREQUENCY RANGE	FO ~ 20000 Hz Average SPL–10 db
06	POWER RATING	Normal **6.0** Watt Maximum **6.5** Watt
07	DISTORTION	5 % Maximum At 1000 Hz 1.0 Watt 0.5 Meter
08	BUZZ&RATTLE	Must be Normal Test by 6.0 Volts Sine Wave.(10Hz~1.1KHz 掃頻 15 次)
09	LOAD TEST	Pink noise with HPF 6.0 Volts（RMS.） 96 Hours
10	HEAT TEST	+60 ± 2 °C 96 Hours
11	LOW TEST	-25 ± 2 °C 96 Hours
12	TEMPERATURE CYCLE TEST	-25 ~ +60 ℃ 4 Cycles
13	HUMIDITY TEST	+40 ± 2 ℃ 90 % ~ 95 % 96 Hours
14	VIBRATION	Frequency 30 ± 15 Hz, Amplitude 1.5 mm for 3 Hours.
15	DROP TEST	75 CM free falling on Concrete floor, 10 times.

Test method and User precaution.

1. Characteristics measured according to standard GB/T12060.5-2011

   1.1 Except other specified, measuring are under Temperature 15~35℃ R.H. 25 ~75%

   1.2 Judgement condition Temperature 20 ±2 R.H. 63~67%

   1.3 Product shelf life is valid for 12 months only.

2. Output Sound Pressure Level (S.P.L.) and distortion testing setup

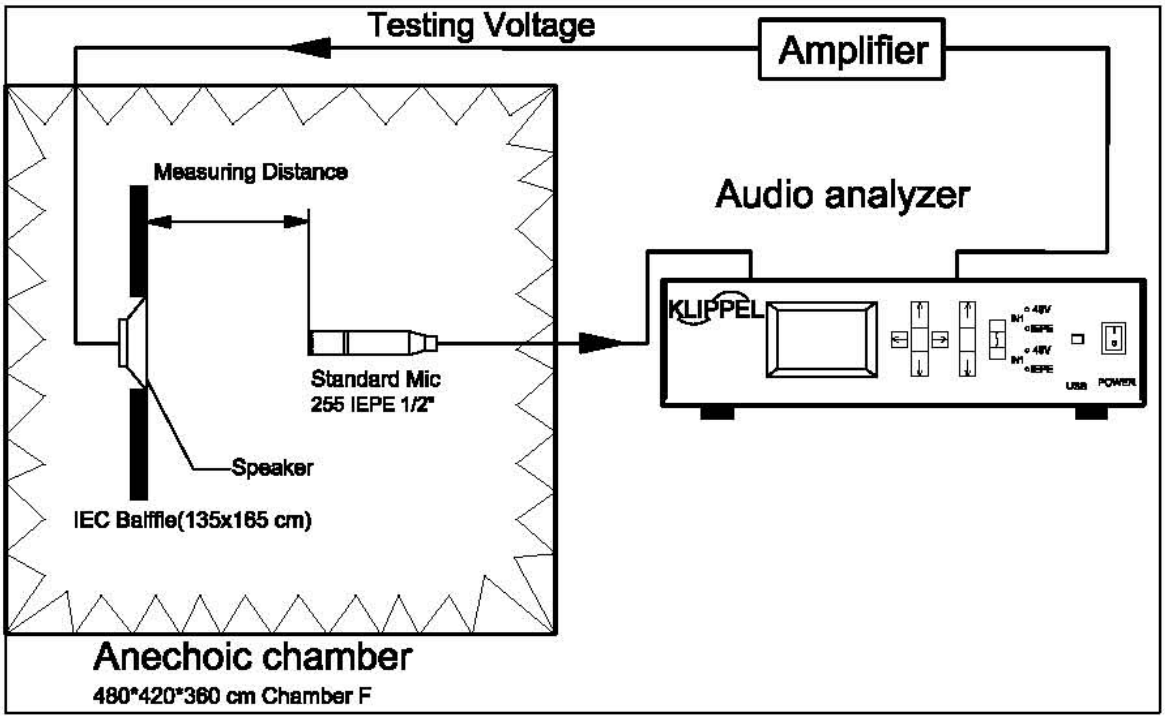

3. Environment & Mechanical test:

   3.1 High Temperature: GB2423.2-81

   After exposure the speaker in the + 60 ± 2 °C chamber for 96 hours, then leave the speaker at room temperature for 1 hour, the SPL should not deviate by ± 3 db, and resonant frequency should not deviate by ± 50 Hz, compare with pre-test measurement.

   3.2 Low Temperature: GB2423.1-81

   After exposure the speaker in the –25 ± 2 °C chamber for 96 hours, then leave the speaker at room temperature for 1 hour, the SPL should not deviate by ± 3 db, and resonant frequency should not deviate by ± 50 Hz, compare with pre-test measurement.

   3.3 Temperature cycle: GB5170.18-87

   After exposure the speaker in the chamber, temperature cycle setting as below shows, SPL should not deviate by ± 3 db, and resonant frequency should not deviate by ± 80 Hz, compare with pre-test measurement.

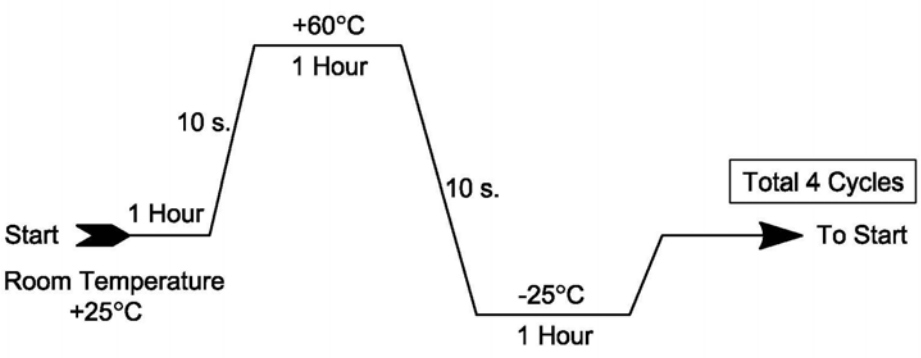

3.4 Humidity: GB5170.18-87

After exposure the speaker in the + 40±2 °C, relative humidity 90% ~ 95% chamber for 96 hours, then leave the speaker at room temperature for 6 hours, the SPL should not deviate by ±3 db, and resonant frequency should not deviate by ±50 Hz, compare with pre-test measurement.

3.5 Vibration: GB11606.8-89

Frequency 30±15 Hz, Amplitude 1.5 mm for 3 Hours. After test, SPL shall not deviate by ±3 db from pre-test measurement,

3.6 Load test: GB/T12060.5-2011

Speaker should not fail after apply 20 ~ 20K Hz Pink noise with HPF rated power input (RMS), 96 hours. After test, SPL shall not deviate by ±3 db from pre-test measurement,

3.7 Drop test: GB2423. 8-81

75 cm free falling on concrete floor, 10 times. After test, SPL shall not deviate by ±3 db from pre-test measurement,

4. Mounting precaution

In order to keep speaker work normally, there shall leave enough free space for diaphragm moving, minimum distance required is marked in speaker mechanical drawing.

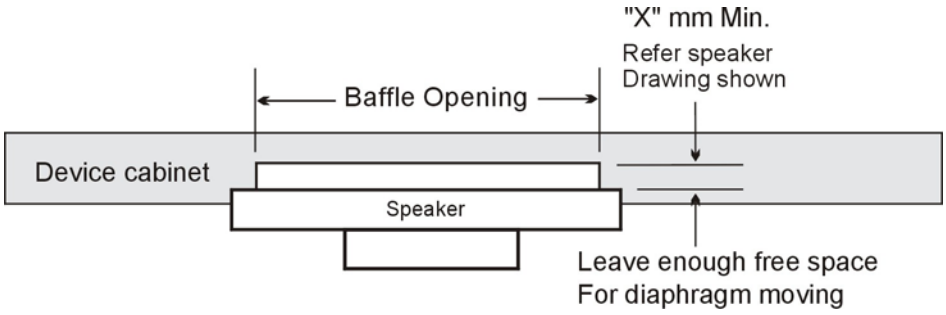

5. Measuring & standard referenced

Abstract from GB/T 12060.5-2011 and IEC 60268-5:2007 methods of measurement for main characteristics of loud speakers.

5.1 Rated sine voltage.

It is stipulated by manufacturer, sine signal voltage that make speaker work continuously in rated frequency range, but the speaker wouldn’t be damaged heartily or mechanically. The persist time of the voltage is 1 hour.

5.2 The rated sine power.

The rated sine power is corresponding with the rated sine voltage, its definition is U_s^2/R, Us indicates the rated sin voltage, R indicates the rated impedance.

5.3 The rated noise power.

The rated noise power is corresponding with the rated noise voltage, its definition is U_n^2/R, Un indicates the rated noise voltage, R indicates the rated impedance.

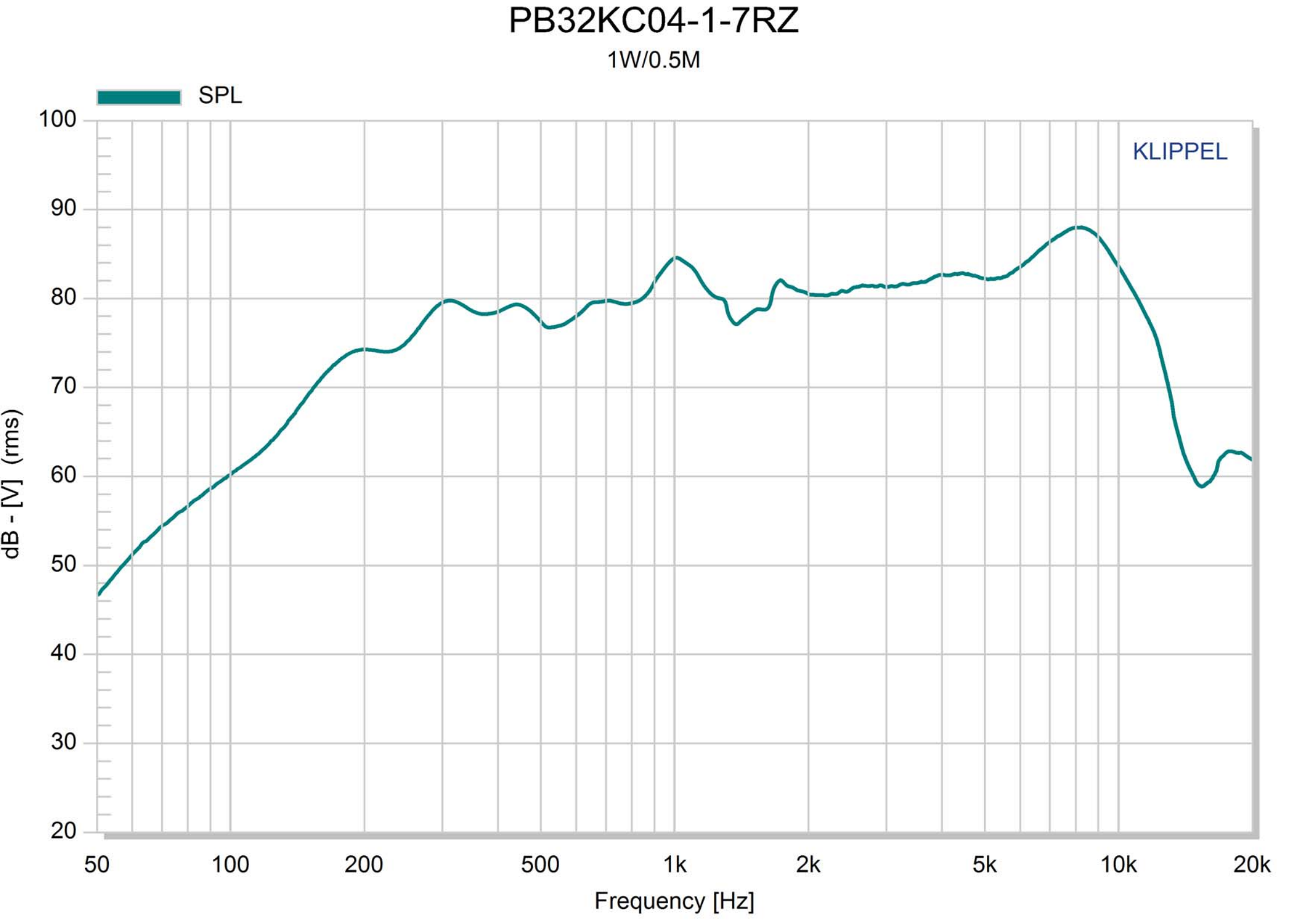
PB32KC04-1-7RZ
1W/0.5M
SPL
KLIPPEL
100
90
80
70
60
50
40
30
20
dB - [V] (rms)
50
100
200
500
1k
2k
5k
10k
20k
Frequency [Hz]

PB32KC04-1-7RZ

1W/0.5M

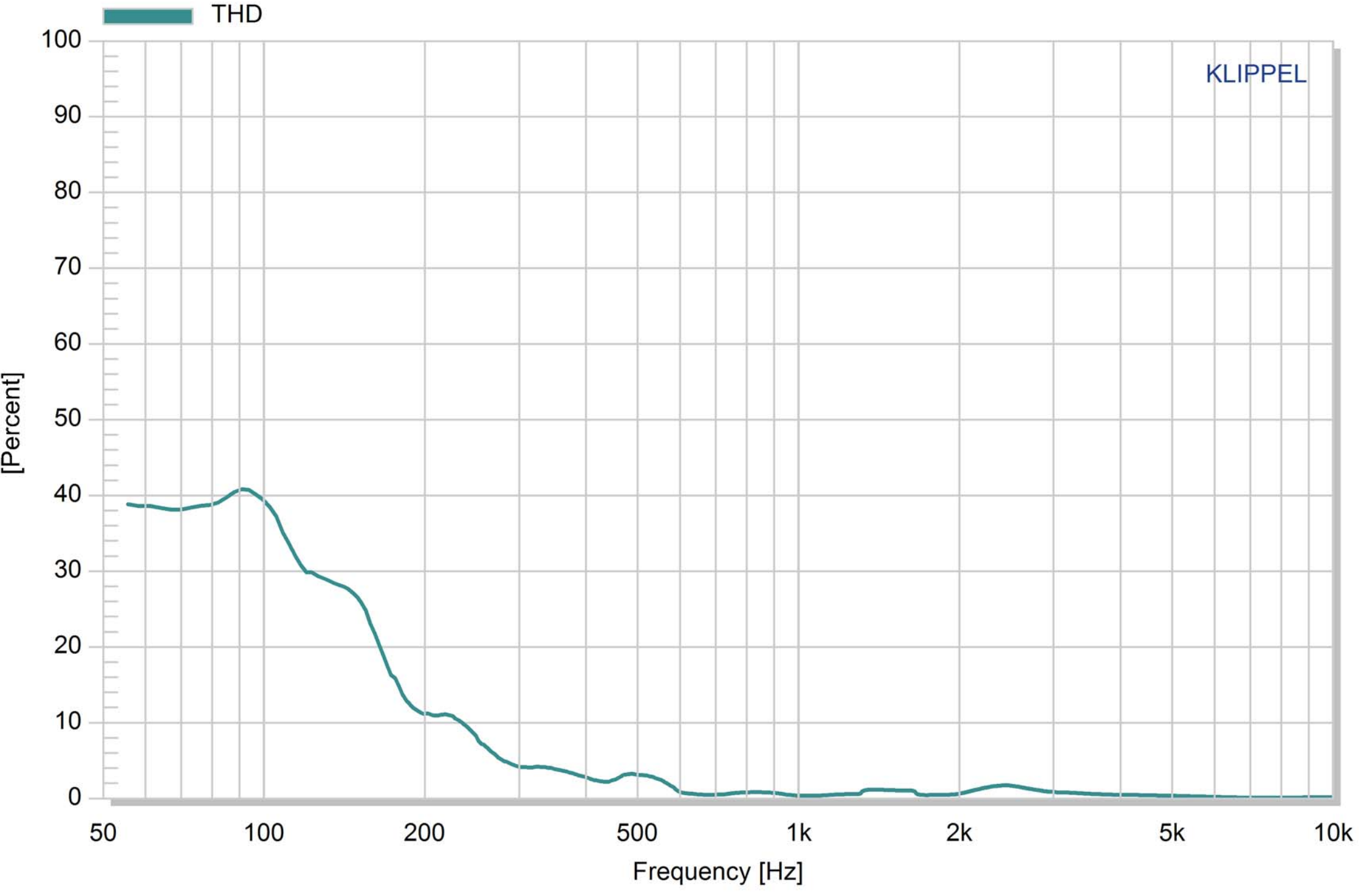

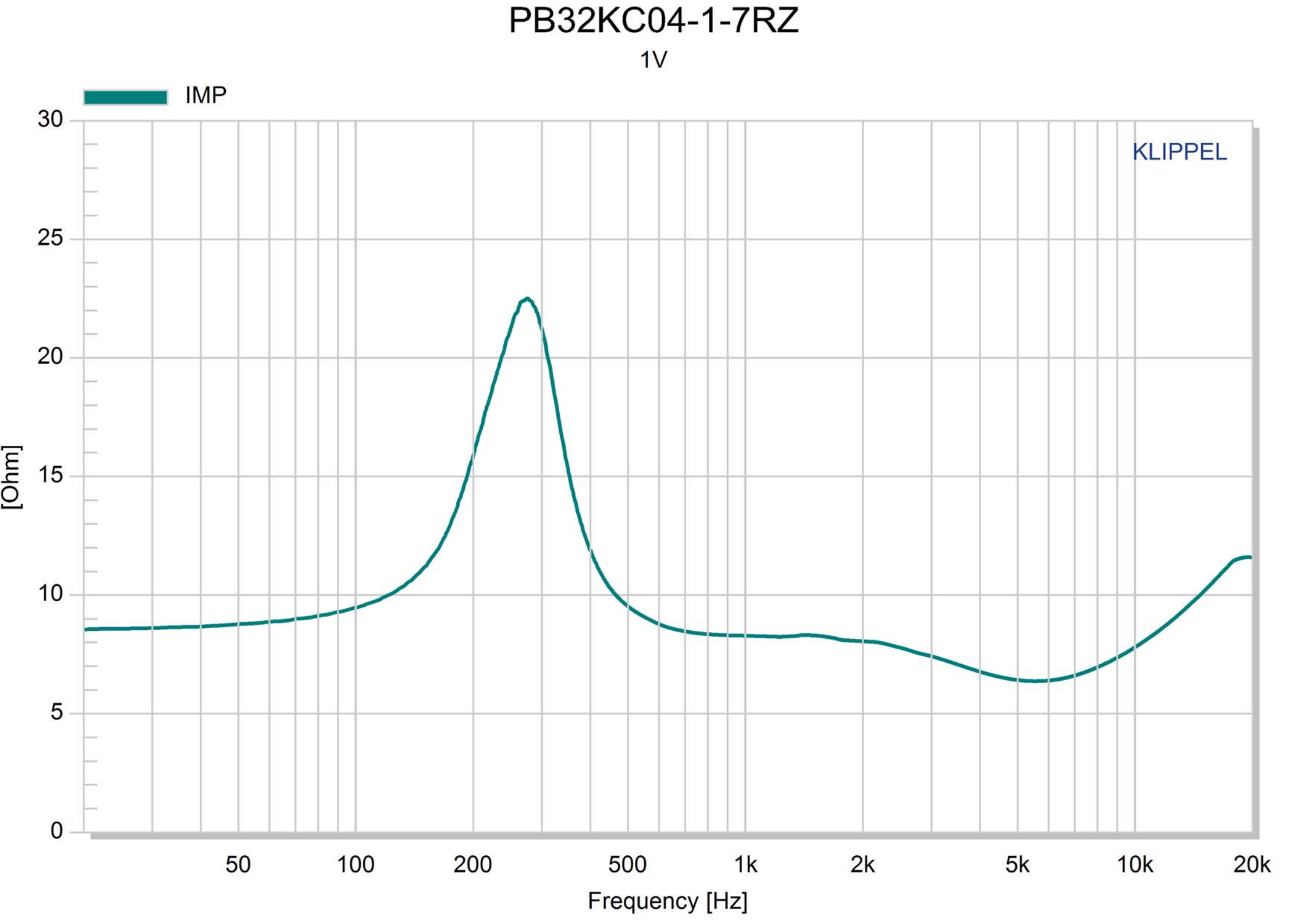
PB32KC04-1-7RZ
1V
IMP
KLIPPEL
30
25
20
15
10
5
0
[Ohm]
50
100
200
500
1k
2k
5k
10k
20k
Frequency [Hz]

不准使用鉍利
電子禁止使用的
環境管理物質

透氣孔截面:
(比例 3:1)

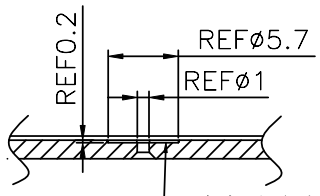

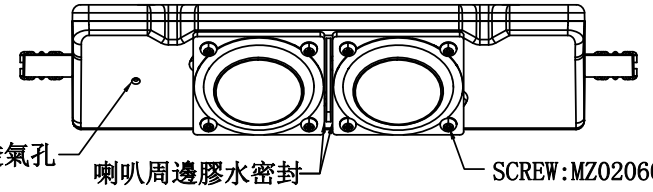

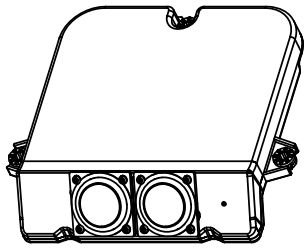

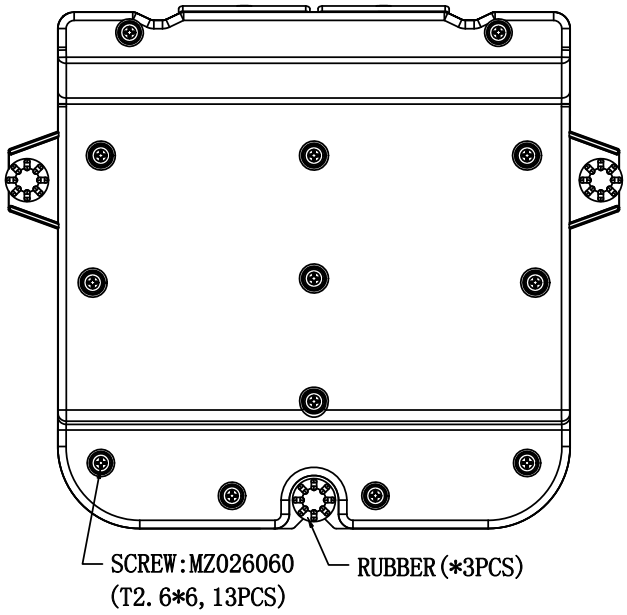

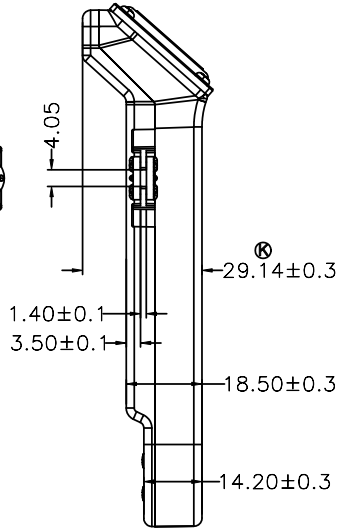

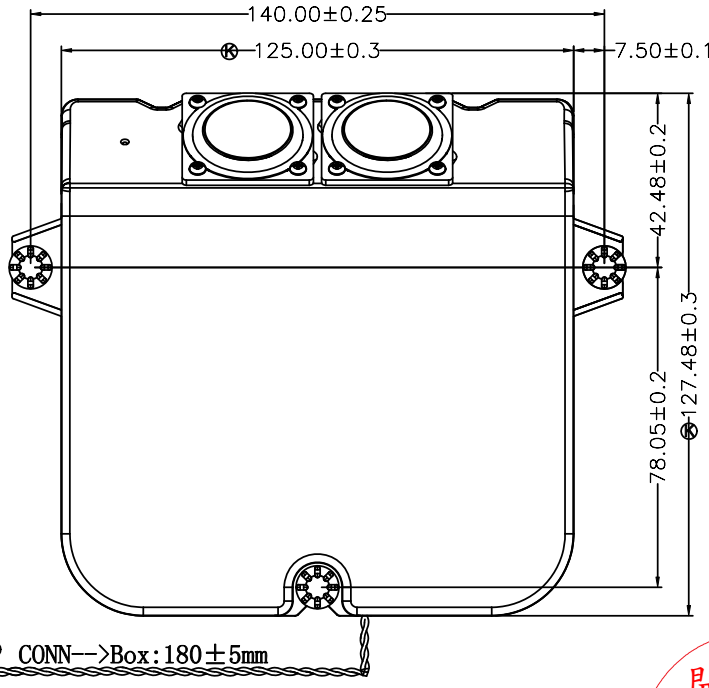

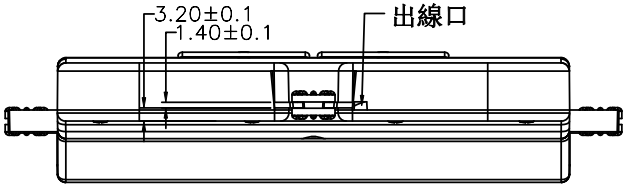

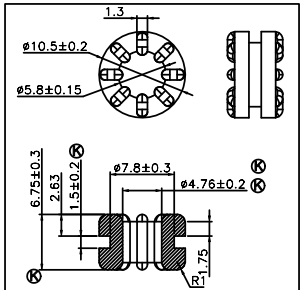

RUBBER:MUR3H090000110
黑色硅膠45° ±10°

PIN2 + RED
PIN1 - BLACK
1. HSG:A1253HA-02P
2.TER:A1253-TPE-A
3.WIRE: UL1571
AWG28,OD=0.8mm,絞線

開發部
2023.07.19
發行
鉍利科技開發股份有限公司

2AAD5390141(T0197)

TOL / RANGE		V			
0-8	±0.05	±0.1	±0.15	±0.2	±1
8-16	±0.1	±0.15	±0.2	±0.2	±2
16-24	±0.15	±0.2	±0.3	±0.3	±2
24-50	±0.2	±0.25	±0.3	±0.4	±3
50-100	±0.25	±0.3	±0.5	±0.5	±3
>100	±0.3	±0.4	±0.4	±0.8	±5

Ⓚ CRITICAL DIMENSIONS | ENVIRONMENT REQUIREMENT:HF
CUSTOMER PN: | VECO PN:
DATE: 2023/04/26 | MATERIAL: | COLOUR:

ITEM	Y/M/D	CONTENTS OF CHANGE	SPONSOR

Vanson Electronics (Nanhai) Co., Ltd.
鉍利電子
E-MAIL: fsveco@veco.com.cn
TEL:+86-757-81266388 FAX:+86-757-81266389

Title: PB32KC04-1-7RZ

Unit: mm | VER: 00 | Appr.:
Scale: 1:1 | CHK.: | Dwg.: 王麗紅

PB32KC04-1-7RZ



