REV	DATE	DESCRIPTION	DRAFT	APPROVED
0	2025-07-24	INITIAL RELEASE	Laslie Chen	
1	2025-08-21	TS RELEASE	Laslie Chen	

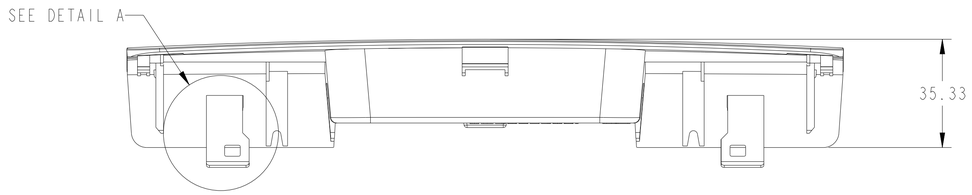

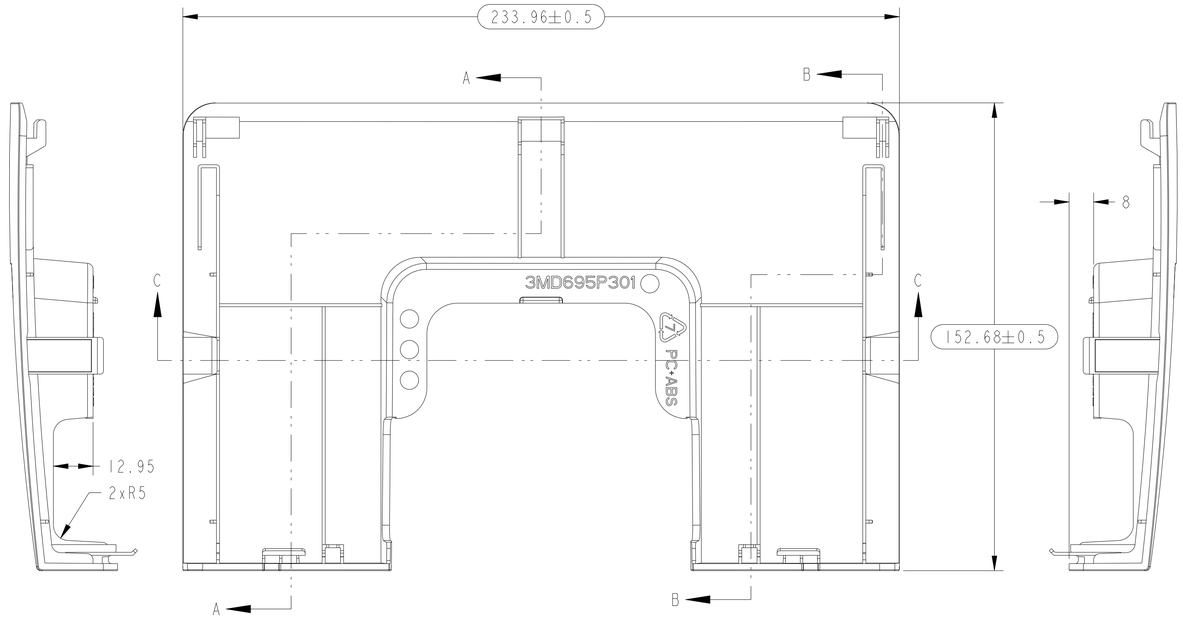

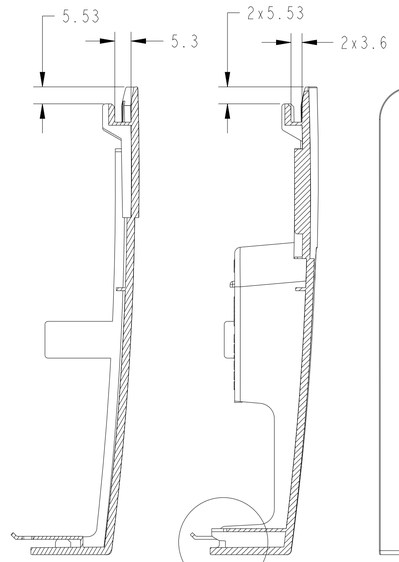

SECTION A-A

SECTION B-B

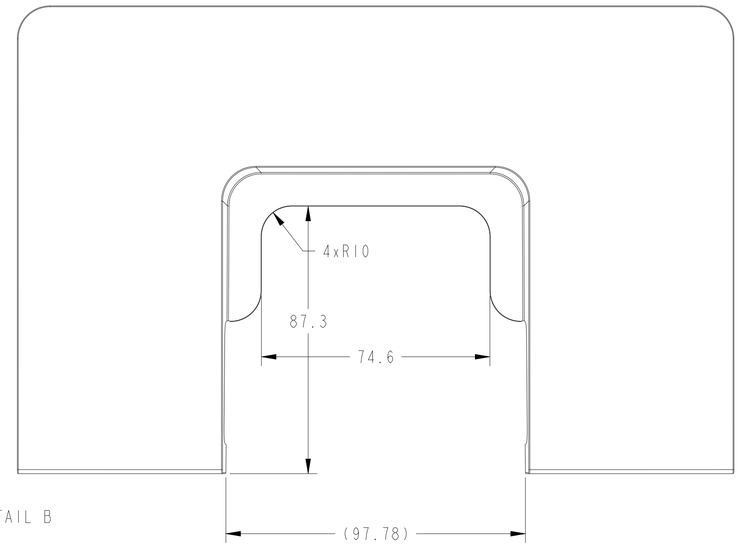

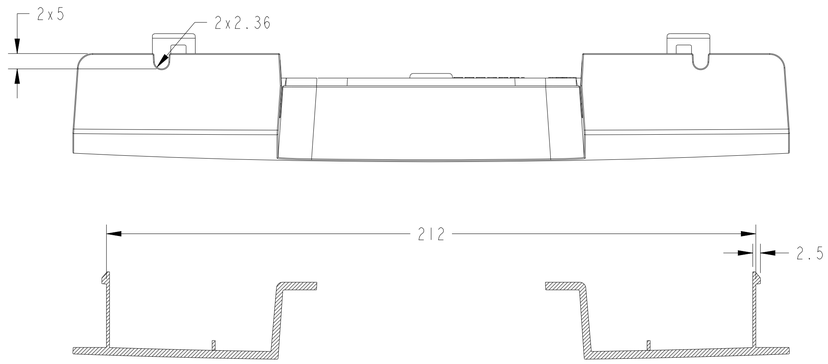

SECTION C-C

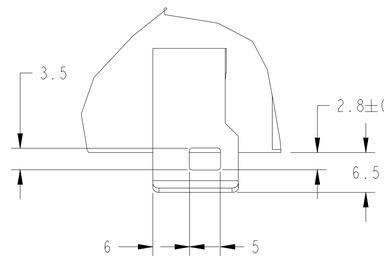

DETAIL A
SCALE 2:1

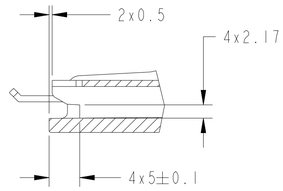

DETAIL B
SCALE 2:1

NOTE:
1. Material: PC+ABS, Bayblend FR3010.
2. Resin Color:Alpline white-90273.
3. Finish Color:Alpline white-90273.
4. Textuer : MT-11010.
5. Generally Thickness:2.5 mm
6. Unspecified dimension refer to CAD drawing file.
7. Warpage and flatness tolerance : <1.0 mm .
8. Packing : EPE pearl bag.
9. RoHS Compliant.

UNLESS OTHERWISE SPECIFIED ALL DIMENSIONS ARE IN MM. TOLERANCES:
.X : ± 0.5
.XX : ± 0.30
.XXX : ± 0.150
ANGLE : ± 1.0°
INTERPRET DIM AND TOL PER ASME Y14.5-2009
THIRD ANGLE PROJECTION

MATERIAL: PC+ABS	FINISH: NA
DRAWN BY: Laslie Chen 2025-06-26	PART NAME: CABLE COVER
CHECKED BY	PART NUMBER: 3MD695P3010
APPROVED BY	MFG. PART NUMBER: NA
MODEL NAME: VMI5	SIZE: A1
SCALE: 1/1	SHEET: 1 OF 1
REV: 0	

DNA Laboratories. Ltd.

THIS DOCUMENT IS SUPPLIED IN CONFIDENCE. NO REPRODUCTION OF THIS DOCUMENT IN PART OR IN WHOLE OR THEREON OF THE ITEMS SHOWN MAY BE MADE WITHOUT THE COPYRIGHT OWNERS WRITTEN PERMISSION.

TOOLING NO. 3MD695P3000