REV	DATE	DESCRIPTION	DRAFT	APPROVED
0	2025-08-06	INITIAL RELEASE	Laslie Chen	
1	2025-08-25	TS RELEASE	Laslie Chen	

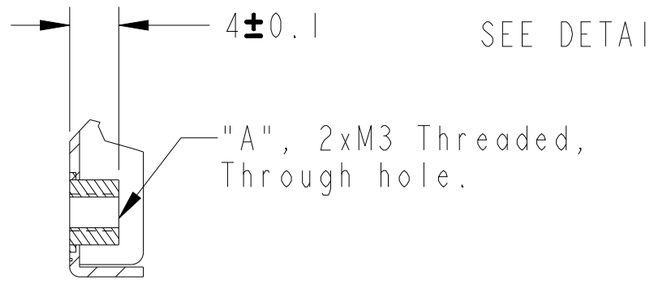

DETAIL A
SCALE 2:1

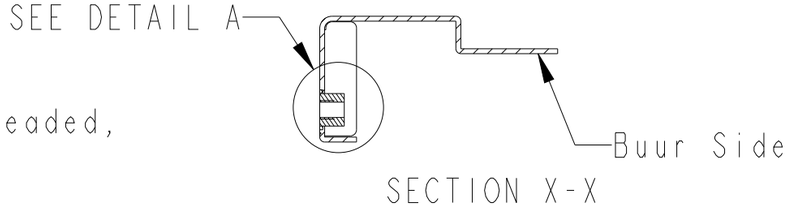

SECTION X-X

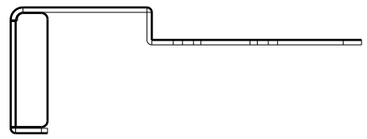

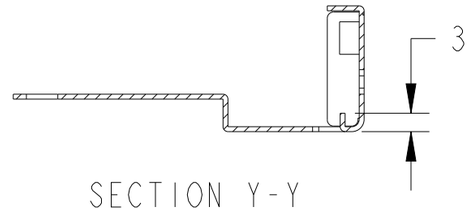

SECTION Y-Y

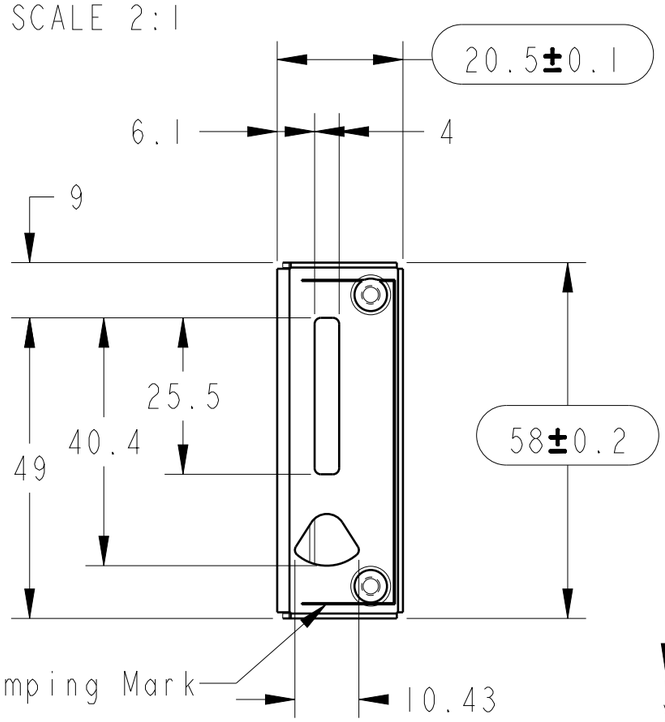

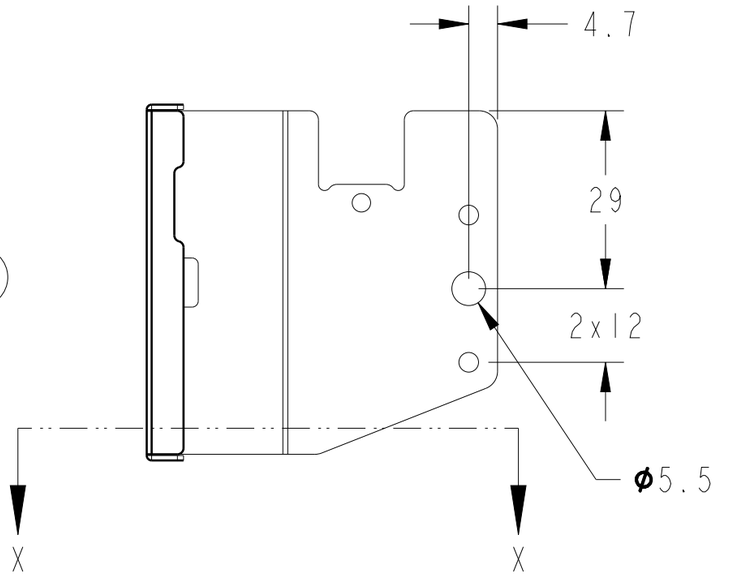

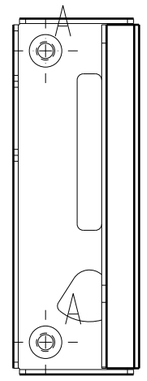

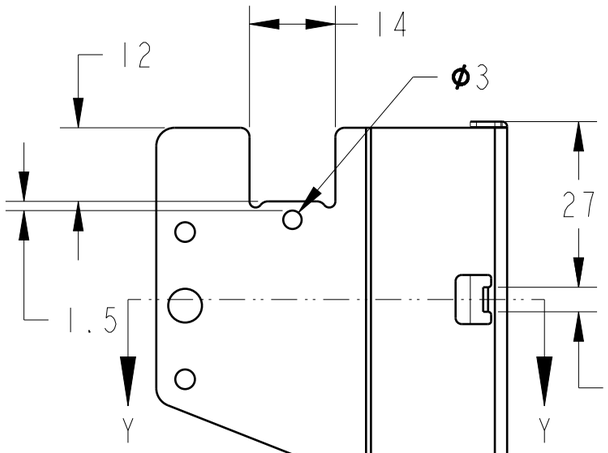

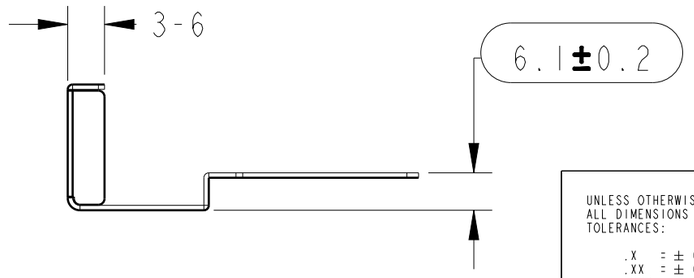

NOTE:
1. Material: SECC t=0.8
2. Threaded Torque: M3 >10 kgf/cm.
3. Burrs & sharp edge(s) allowed in 0.03 mm MAX..
   based on the principle of not hurtting hands.
4. Unspecified Dimension refer to CAD Drawing file.
5. Packing: PE bag (each).
6. RoHS Compliant.

TOOLING NO.	3MD695M2000

UNLESS OTHERWISE SPECIFIED
ALL DIMENSIONS ARE IN MM.
TOLERANCES:

.X = ± 0.5
.XX = ± 0.30
.XXX = ± 0.150
ANGLE = ± 1.0°

INTERPRET DIM AND TOL
PER ASME Y14.5-2009

THIRD ANGLE PROJECTION

MATERIAL:	FINISH:	DIVA Laboratories. Ltd.				
SGCC	NA					
DRAWN BY: Laslie Chen 2025-07-16		PART NAME: BADGE BD BRACKET				
CHECKED BY:		PART NUMBER: 3MD695M2010	MFG. PART NUMBER: NA			
APPROVED BY:		MODEL NAME: VM15	SIZE: A3	SCALE: 1:1	SHEET: 1 OF 1	REV: 1
FILE NAME: 027_216_BADGE_BD_BKT	APPROVED NO.:	THIS DOCUMENT IS SUPPLIED IN CONFIDENCE. NO REPRODUCTION OF THIS DOCUMENT IN PART OR IN WHOLE OR THEREON OF THE ITEMS SHOWN MAY BE MADE WITHOUT THE COPYRIGHT OWNERS WRITTEN PERMISSION.				