REV	DATE	DESCRIPTION	DRAFT	APPROVED
0	2025-07-24	INITIAL RELEASE	Laslie Chen	
1	2025-08-21	TS RELEASE	Laslie Chen	

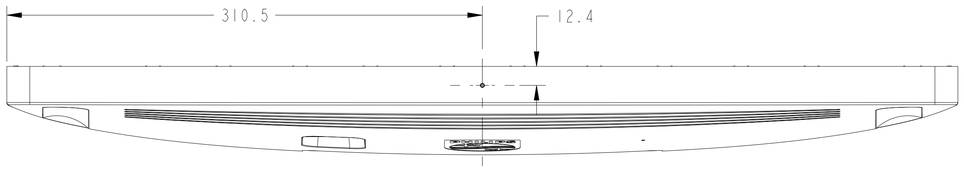

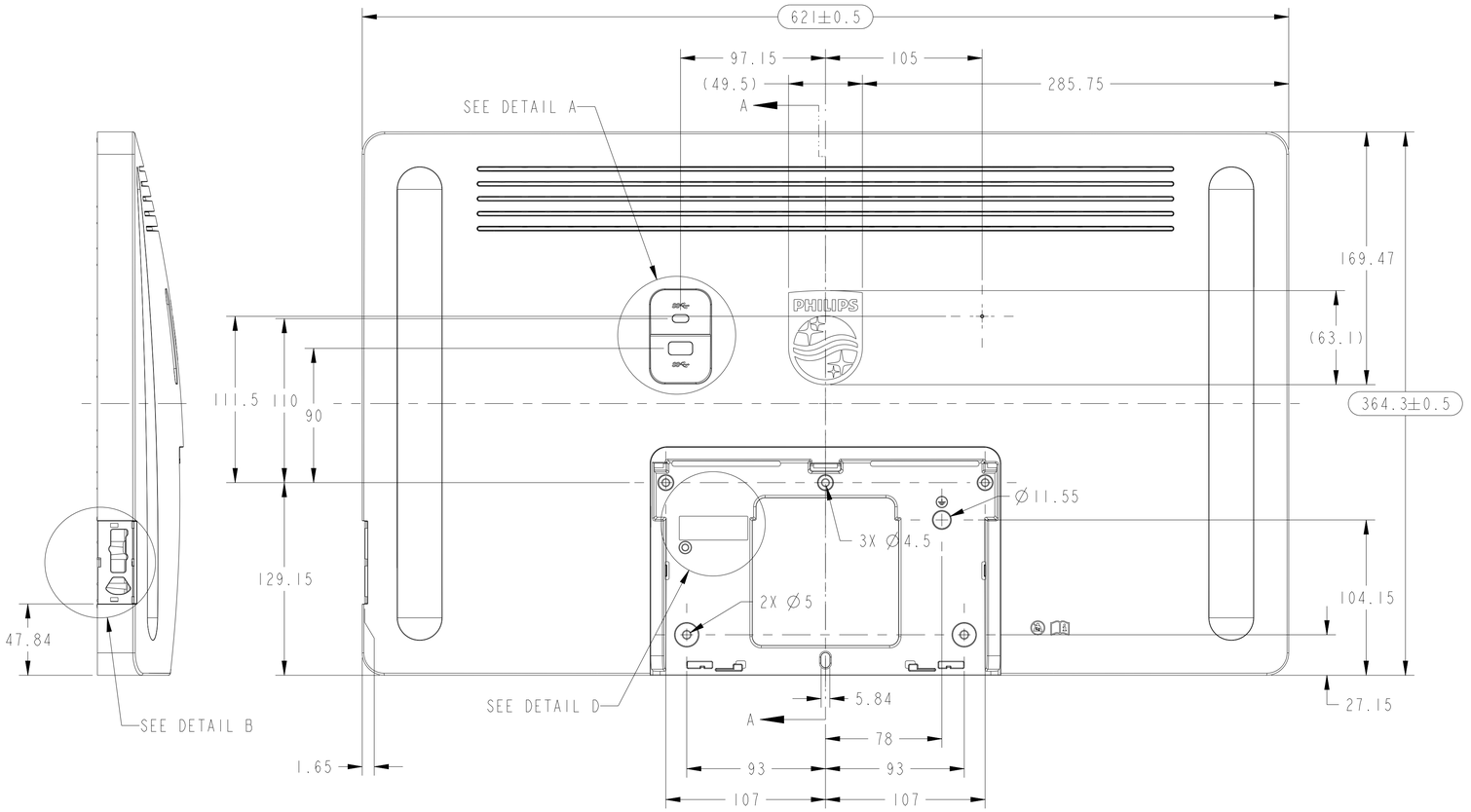

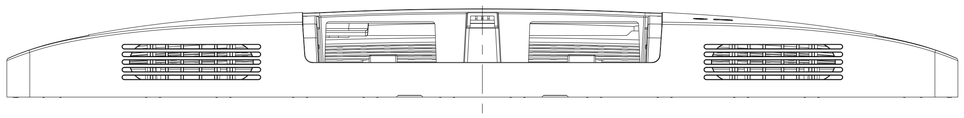

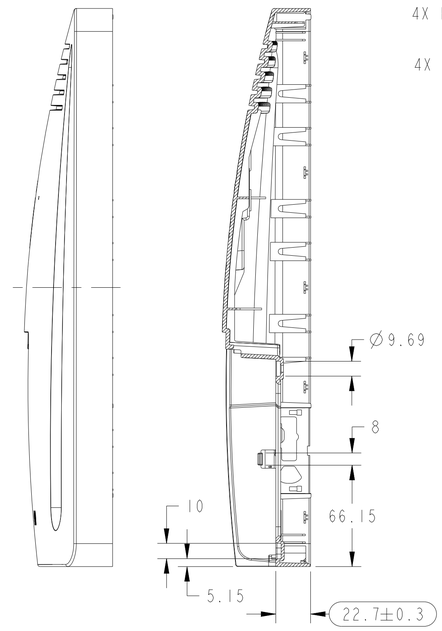

SECTION A-A

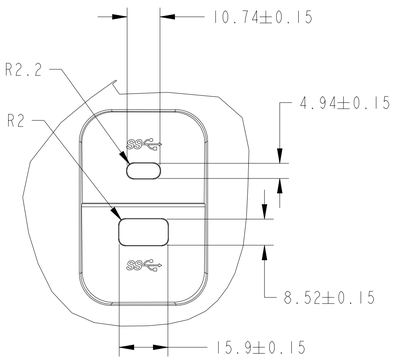

DETAIL A
SCALE 1:1

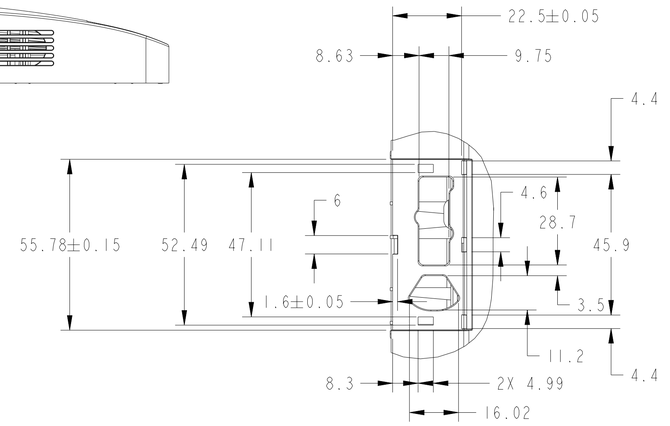

DETAIL B
SCALE 1:1

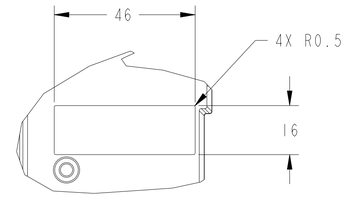

DETAIL D
SCALE 1:1

NOTE:
1. Material: PC+ABS, Bayblend FR3010.
2. Resin color: Alpline white-90273.
3. Finish color: Alpline white-90273.
4. Textuer: MT-11010.
5. Generally Thickness: 2.5 mm
6. Unspecified dimension refer to CAD drawing file.
7. Warpage and flatness tolerance : <0.5 mm .
8. Packing : EPE pearl bag.

TOOLING NO. 3MD695P2000

UNLESS OTHERWISE SPECIFIED ALL DIMENSIONS ARE IN MM.
TOLERANCES:
X : ± 0.5
.XX : ± 0.30
.XXX : ± 0.150
ANGLE : ± 1.0°
INTERPRET DIM AND TOL PER ASME Y14.5-2009
THIRD ANGLE PROJECTION

MATERIAL: PC+ABS	FINISH:	DNA Laboratories. Ltd.			
DRAWN BY: Laslie Chen 2025-06-25		PART NAME: REAR COVER			
CHECKED BY		PART NUMBER: 3MD695P2010	MFG. PART NUMBER NA		
APPROVED BY		MODEL NAME: VMI5	SIZE: A1	SCALE: 1:2	SHEET: 1 of 2 REV 1
FILE NAME: 827.216.REAR.COVER.ENG	APPROVED NO.:	THIS DOCUMENT IS SUPPLIED IN CONFIDENCE. NO REPRODUCTION OF THIS DOCUMENT IN PART OR IN WHOLE OR THEREIN OF THE ITEMS SHOWN MAY BE MADE WITHOUT THE COPYRIGHT OWNERS WRITTEN PERMISSION.			

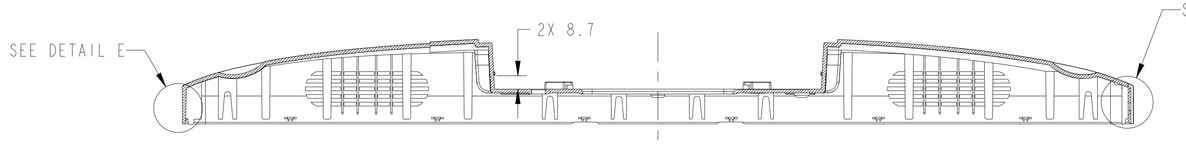

SECTION C-C

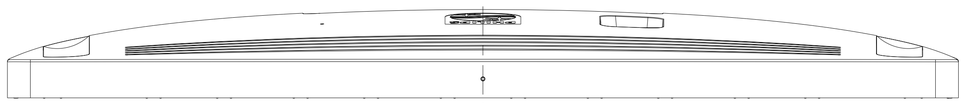

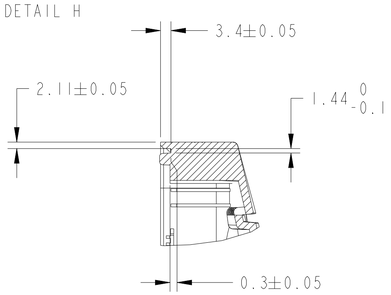

DETAIL C
SCALE 1:1

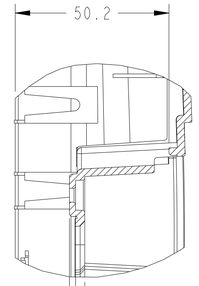

DETAIL G
SCALE 1:1

3X 3
3X 5

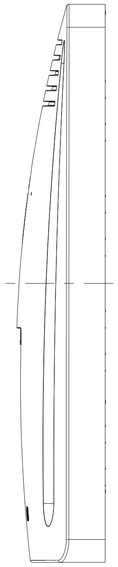

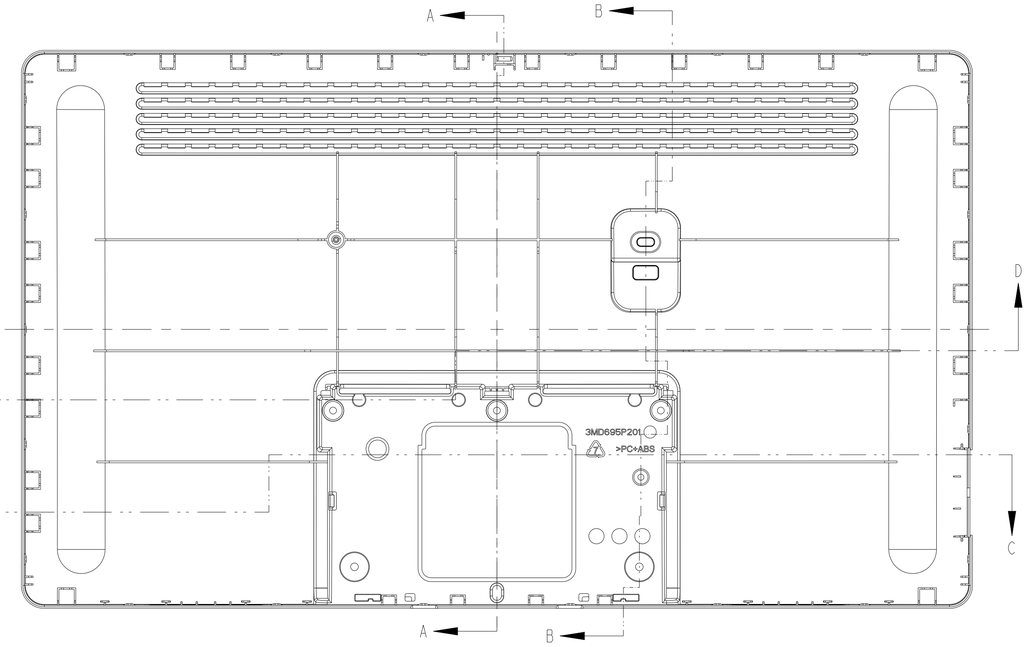

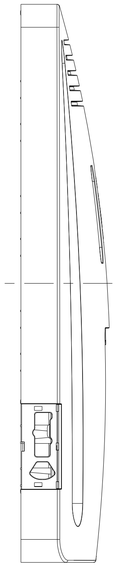

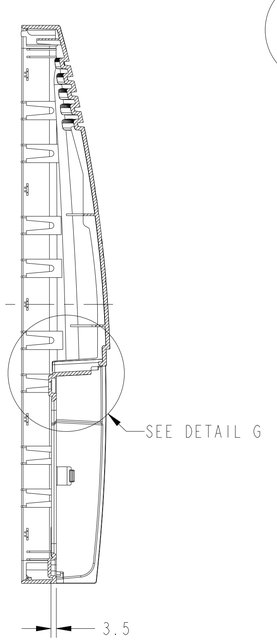

SECTION A-A

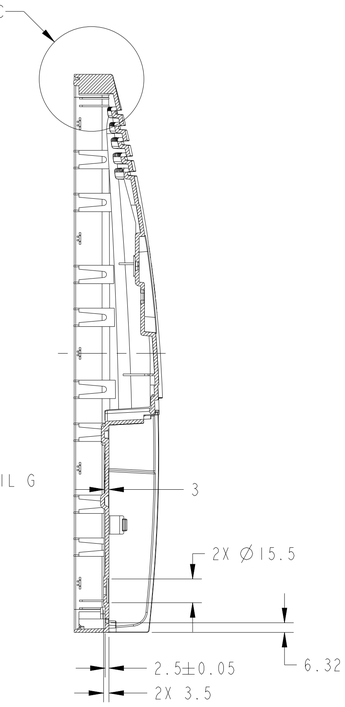

SECTION B-B

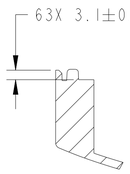

DETAIL F
SCALE 1:1

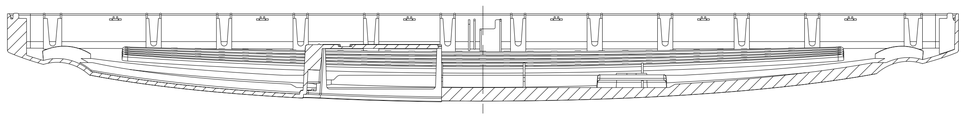

SECTION D-D

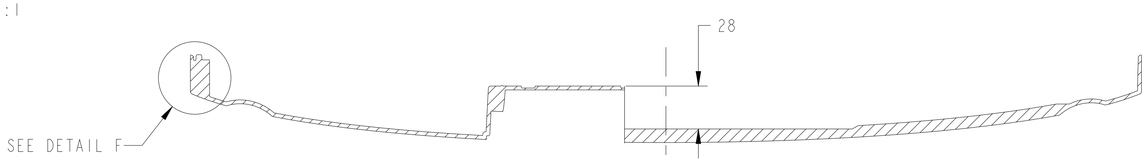

SECTION D-D

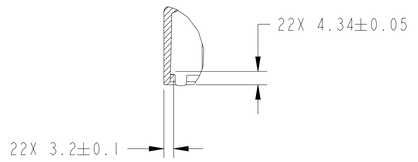

DETAIL E
SCALE 1:1

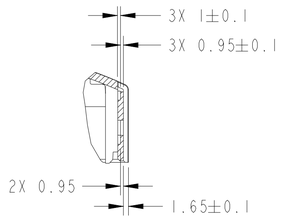

DETAIL H
SCALE 1:1

DIVA Laboratories. Ltd.

PART NAME: REAR COVER				
PART NUMBER: 3MD695P2010		MFG. PART NUMBER NA		
MODEL NAME: VM15	SIZE: A1	SCALE: 1:2	SHEET: 2 of 2	REV 1