







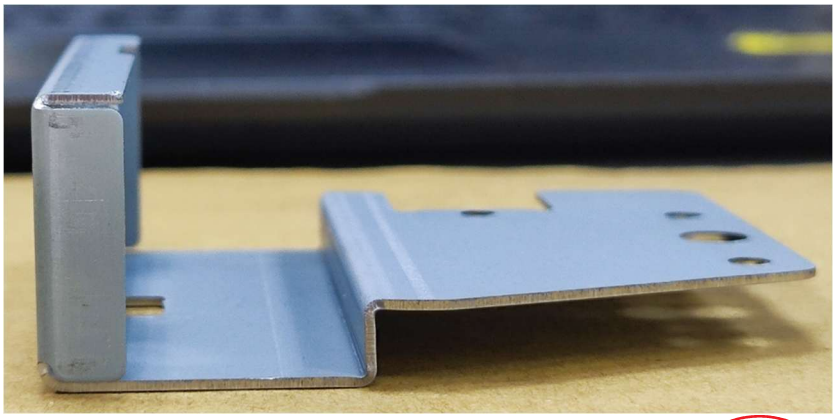



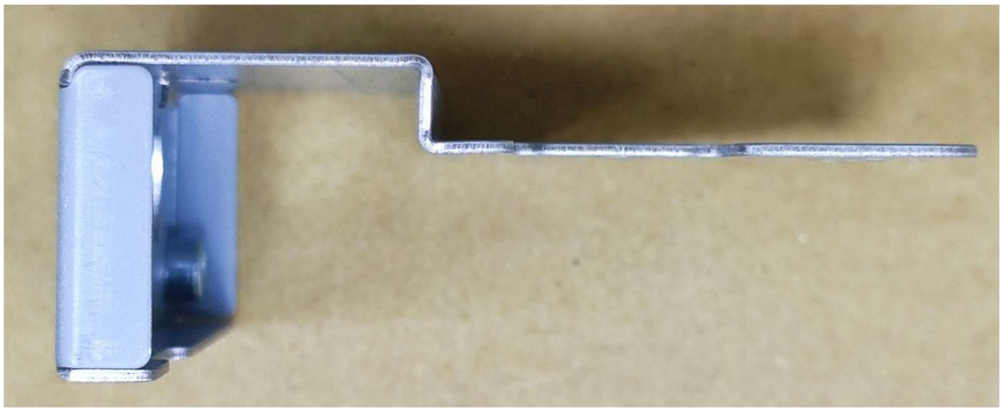

設計驗證
工程課
2025 -11- 06
發行

仕義股份有限公司

承認書

APPROVAL SHEET

機種/USER FOR：

品名/PART NAME： 3MD695M2010 (M3524)

規格/DESCRIPTION： BADGE BD BRACKET

日期/ISSUDE DATE： 2025/10/30

( ) 新規(NEW TYPE)

( ) 限量(LIMITED) Q' TY ( )PCS.

( ) 變更(MODYFI)

設計驗證
工程課
2025 -11- 06
發行
鈺鐘科技開發股份有限公司

核 准 Approved By	審 核 Checked By	品 管 Q.A.
溫志雄	林惠敏	溫孟華

公司：新北市樹林區東興街6巷12號
廠房：新北市樹林區東興街6巷12號
TEL：(02)8685-6622 FAX：(02)8686-6202
統一編號：34581060
E-MAIL：win22649@ms2.[illegible]

仕 義 股 份 有 限 公 司

SUITABLE INC.

零件承認書

PART&VENDOR INFORMATION:

PART NO.	3MD695M2010	APPROVAL	
DESCRIPTION	BADGE BD BRACKET	REJECT	
USED IN MODEL		CONDITION APPROVAL	
		C.A QUANTITIES	

TO THE VENDOR:

1.AS SHOWING IN THE FORMAL DRAWING,THE DIMENSIONS OF THE APPROVAL SAMPLE CHECKED OK.
如正式圖面所示,承認樣品尺寸檢驗OK.
2.THE FUNCTION OF THE PARTS TESTED OK.
零件之功能測試OK.
3.MATERIAL:
SECC 0.8t
4.CHANGE OF MATERIAL MUST TO BE APPROVED BY R&D
材質變更須經R&D同意.
5.ALL OF SURFACE SHOULD BE CLEANED,DEGRASED AND FREE OF SHARP EDGES.
所有成品外觀不能有油污及銳角.
6.NO PLATED FAILURE,BEND DEFORMATION AND SO ON ALLOWED.
所有成品外觀不能有電鍍不良及彎曲變形現象.
7.ALL EXTERNAL SURFACES PLEASE BASE ON THE R&D APPROVAL SAMPLE.
所有外觀請以R&D所承認之樣品為基準(允收下限).
8.MANUFACTURING,PACKING,SHIPPING AND INSPECTING PLEASE FOLLOW THE NOTES AND SPECIFICATIONOF THE ISSUED DRAWING.
請按照所發行圖面之規格及注意事項進行製造,包裝,運送及檢驗作業.
9.THE CONDITION APPROVAL SAMPLE WAS ATTACHED TO VQA ALREADY.
限量承認樣品已先行送至VQA.

SIGNATURE:

PREPARED BY:		DATE:		PREPARED BY:		DATE:	
CHECKED BY:		DATE:		CHECKED BY:		DATE:	

仕 義 股 份 有 限 公 司

SUITABLE INC.

檢驗報告表

P / N	3MD695M2010	品　名	BADGE BD BRACKET		
客　戶	鈺緯科技	認 可 者		認可日期	
審　核		承　認		試模次數	
認可項目					
材　質	SECC 0.8t	表面處理	淨化處理	淨化處理	
空殼組立		實體組立		防火等級	

NO.	圖面尺寸	公差	測量值(1)	測量值(2)	測量值(3)	判定	量測等級 檢驗等級	建議設變尺寸 (含公差)	備註
1	57.20	+0.50 -0.50	57.46	57.47	57.49	OK			
2	20.50	+0.30 -0.30	20.52	20.52	20.53	OK			
3	58.00	+0.30 -0.30	58.01	58.00	58.00	OK			
4	6.10	+0.50 -0.50	6.17	6.18	6.20	OK			
5	5.25	+0.30 -0.30	5.24	5.27	5.28	OK			
6	M3鉚釘X2		OK	OK	OK	OK			
7	14.00	+0.80 -0.20	14.04	14.03	14.03	OK			
8	Ø5.5	+0.50 -0.50	5.48	5.47	5.48	OK			
9	Ø3.2	+0.50 -0.50	3.18	3.17	3.17	OK			
10									
11									
12									
13									
14									
15									
16									
17									
18									
19									
20									

REV	DATE	DESCRIPTION	DRAFT	APPROVED
0	2025-08-06	INITIAL RELEASE	LASLIE	
A	2025-10-15	PRODUCTION RELEASE	LASLIE	FERRIS

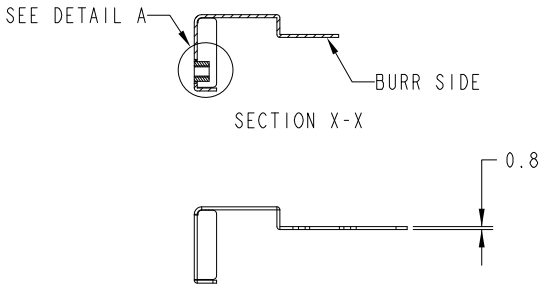

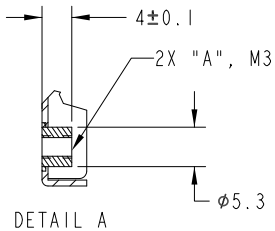

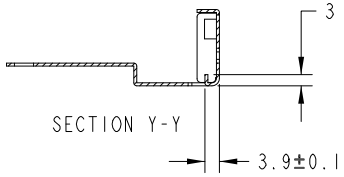

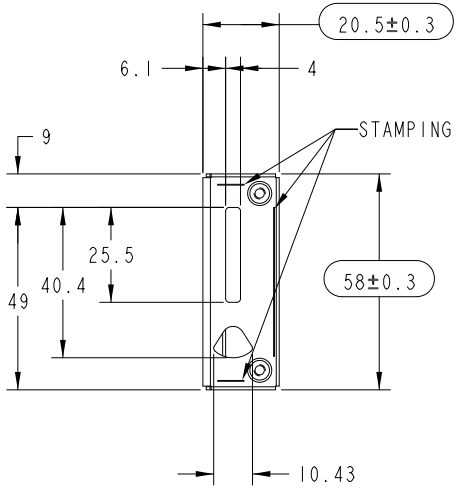

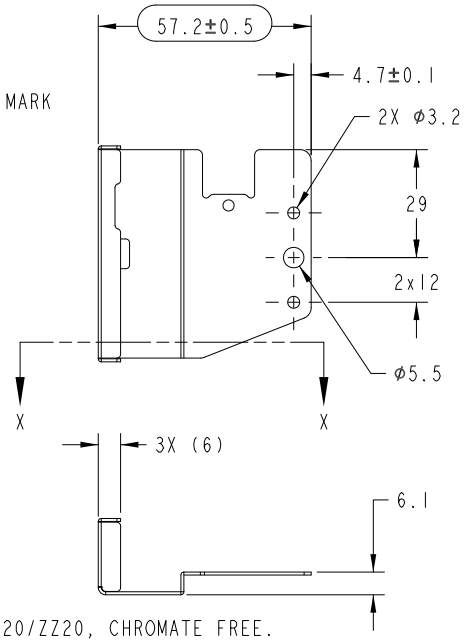

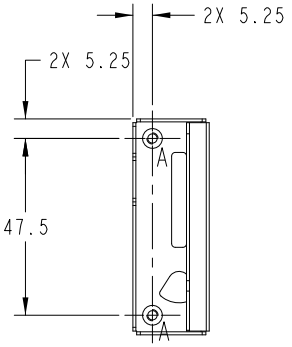

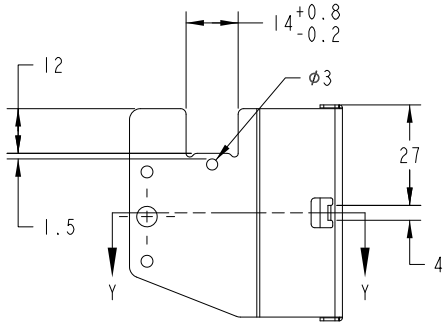

設計驗證
工程課
2025-11-06
發行

NOTE:
1. MATERIAL: CSC SECC, ZINC COATING MASS:ZZ20/ZZ20, CHROMATE FREE.
2. THREADED TORQUE: M3 >10 kgf/cm.
3. BURRS & SHARP EDGE(S) ALLOWED IN 0.03 MM MAX.
   BASED ON THE PRINCIPLE OF NOT HURTTING HANDS.
4. INSPECTION CLASS C: MINOR IMPERFECTIONS ALLOWED.
   PERMITTED TYPES OF DEFECTS (E.G., SCRATCHES, DENTS, COLOR VARIATIONS/CHROMATIC ABERRATION).
5. UNSPECIFIED DIMENSION REFER TO CAD DRAWING FILE.
6. PACKAGING REQUIREMENTS ARE NON-PRESCRIPTIVE; SOLE CRITERION IS PREVENTION OF IN-TRANSIT DAMAGE.
7. RoHS COMPLIANT.

TOOLING NO.	3MD695M2000

UNLESS OTHERWISE SPECIFIED ALL DIMENSIONS ARE IN MM. TOLERANCES:
.X = ± 0.5
.XX = ± 0.30
.XXX = ± 0.150
ANGLE = ± 1.0°
INTERPRET DIM AND TOL PER ASME Y14.5-2009

THIRD ANGLE PROJECTION

MATERIAL:	FINISH:	DIVA Laboratories. Ltd.				
SECC	NA					
DRAWN BY: LASLIE 2025-07-16		PART NAME: BADGE BD BRACKET				
CHECKED BY: FERRIS 2025-09-15		PART NUMBER: 3MD695M2010(M3524)	MFG. PART NUMBER: NA			
APPROVED BY: LASLIE 2025-10-15		MODEL NAME: VMI5	SIZE: A2	SCALE: 1:1	SHEET: 1 OF 1	REV: A
FILE NAME: 021_216_BADGE_BD.DWT	APPROVED NO.:					

THIS DOCUMENT IS SUPPLIED IN CONFIDENCE. NO REPRODUCTION OF THIS DOCUMENT IN PART OR IN WHOLE OR THEREON OF THE ITEMS SHOWN MAY BE MADE WITHOUT THE COPYRIGHT OWNERS WRITTEN PERMISSION.