SPECIFICATION FOR APPROVAL

Customer : DIVA

Customer P/N: 3ZAD24V1112 (Z0402)

Part No : _____ **Rev :** _____

Description : OPEN FRAME

Delta Model No : MDS-250APB24 AB

Document Rev : 08

Sample Issue Date : Jan.05,2026

DELTA ELECTRONICS, INC.

16, Tung Yuan Road
Chungli Industrial Zone.
Taoyuan City 320023, Taiwan, R.O.C
Internet : http:/www.deltaww.com
TEL:886-3-4526107 FAX:886-3-4343617

TABLE OF CONTENTS

1. Revision History
2. Electrical Specification
3. Physical Dimension
4. Label Drawing
5. Packing
6. Safety License

Please send one copy of this specification back after you signed approval for production pre-arrangement.

Customer Sign : _____ **Date :** _____

設計驗證
工程課
2026 -01- 09
發行
益博科技開發股份有限公司

Approved By : _____ **Date :** _____

Engineer By: TOM.LIN M.Engineer By: LEO.JY.WU Approved By: JASON.HH.CHANG

1. Revision History

DELTA P/N	MDS-250APB24 AB	SHEET 1 OF 1
CONTENT	Revision History	DATE May.07,2024

1.Revision History

REV.	DESCRIPTION	ENGINEER	DATE
00	ISSUE	ALAN.CHUANG	09/05/2018
01	SPEC LABEL增加產品CC code: AB, REV.: 02 打印資訊請參考Label Drawing	TERRY.LIN	09/15/2020
02	將CN101由原本MOLEX變更為JST (原Molex EOL),	TERRY.LIN	09/30/2021
03	SPEC LABEL REV變更為03 UPDATED Label Drawing, 增加UKCA和變更廠區代碼為DCGP,SPEC LABEL REV變更為04	ROCK.WEN	08/09/2022
04	修正Physical Dimension CN101為JST	ROCK.WEN	12/28/2022
05	Physical Dimension加貼 CCC Label Label Drawing Add CCC Label	LEO.WU	11/16/2023
06	Update Label Drawing	LEO.WU	01/08/2024
07	Update Label Drawing	LEO.WU	05/07/2024
08	Update Customer P/N, Change from 3ZAD24V1111 to 3ZAD24V1112	Alan.chuang	01/05/2026

2. Electrical Specification

MODEL LIST:MDS-250APB24 AB

1.0 INPUT SPECIFICATIONS

1.1 Input Voltage

PSU shall operate from 90 Vac to 264 Vac. Nominal line is 100Vac / 240Vac.

1.2 Input frequency

The power supply shall operate with an input frequency from 47 Hz to 63 Hz.

1.3 Input current

Maximum steady state input current is less than 4A.

1.4 Input Protection

Internal T5.0AL/250V fuses protection on Line and Neutral.

1.5 Inrush current (cold start)

less than 40A at 115 and 230 Vac, room temperature, cold start with 3KV ac source.

1.6 Input Surge Voltage

The power supply shall survive input surge voltage of 300Vac for 100ms without any component damage or performance deviation.

1.7 Leakage current

The total combined leakage current shall not exceed 100 microamperes when test at 240Vac/ 50Hz in a normal operating condition.

1.8 Power Factor

The Power Factor must be equal to or greater than 0.9 when measured at maximum load (@ 250W) and the nominal operating input voltage range ($100V_{rms}$/50Hz to 60Hz, 115V/50Hz and $230V_{rms}$/50Hz).

1.9 Brown Out Protection

The power supply must be able to return to normal power up state after a slow brownout condition. While the power supply is operated at full rated DC load, the AC line voltage is reduced from 90VAC/60Hz to 0VAC at a constant rate of (1V/sec), the power supply should shut down safely. When the power is reapplied from 0VAC to 90VAC/60Hz at a constant rate of (1V/sec), the power supply must return to a normal power up state.

2.0 OUTPUT SPECIFICATIONS

2.1 General output spec

	Output Vnor	Regulation	Full Load Power	Ripple Noise No load and Full load
V_{MAIN}	24V	+/- 3%	250W	1% Vnor max
V_{STBY}	5V	+/- 3%	2.5W	Vstby<100mVp-p

Ripple noise measured methods:

T1. Ripple noise range tested under room temperature.

T2. Performed by 20M Hz bandwidth in oscilloscope.

T3. Applied 0.47uF high frequency capacitor and 10uF electrolytic capacitor across output connector terminals.

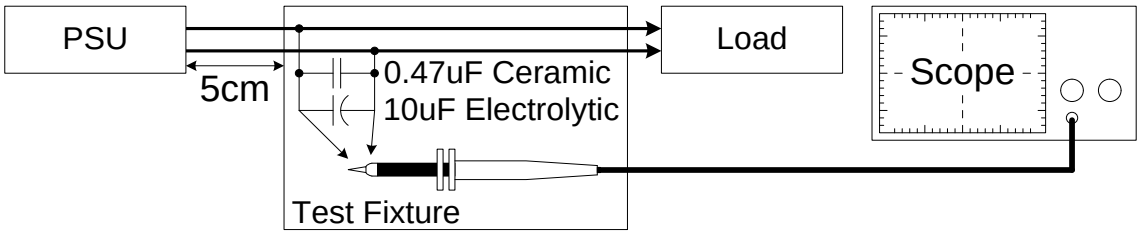

2.2 Efficiency

Full load efficiency > 89% at 115V/60Hz, 230V/50Hz.

No load input power < 0.5W with main output inhibited, only standby working at 115V/60Hz, 230V/50Hz.

Note: Efficiency is tested under room temperature on board end.

3.0 GENERAL FEATURES

3.1 Dynamic load response

3.1.1 Turn-On & Turn-Off Response

PSU main output overshoot at turn-on & turn off shall not exceed 10% of nominal voltage value.

3.1.2 Transient Load

Vmain_24V：± 5% @ with 50-100% load change

3.1.3 Capacitive Load

PSU should be able to power up and operate normally with the following maximum capacitances present at DC outputs.

Output Voltage	Max
24V Vmain version	1500μF

3.2 Hold up time

12ms(min) @ 115Vac, with 150W load

3.3 Start up time and rise time

Upon application of the AC input, Vmain output shall be within regulation in 2000ms startup time, and Vmain output voltage shall rise monotonically from 10% to 90% of its final value within 100ms.

3.4 Protection

3.4.1 Over voltage protection

Output	Over Voltage Protection Limit	Specs
V_{main}	125% Vnor max	Latch
V_{Stanby}	125% Vnor max	Latch

3.4.2 Over load protection

Main output 160% of rated current
Standby 1.06A max
Hiccup Mode(Non-Latching, Auto-Recovery)

3.4.3 Short circuit protection

The power supply is protected at a short happened between the output terminals and shall not damage, and shut down.

Protection mode：Auto recovery

3.4.4 Over temperature protection

Protection mode：Latch off

3.4.5 Acoustic

Acoustic noise shall be less than 40dB tested with microphone set 15cm above PSU component C1 and placed in the center of PSU.

4.0 ENVIRONMENT SPECIFICATIONS

Surrounding Air Temperature	Operating	Absolute Max -10°C to +70°C, full load linearly de-rate from 50°C to 50% rated power up to 70°C Note: see below power de-rating curve
	Storage	-40°C to +85°C
Operating Humidity		5-95% RH (Non-Condensing)
Operating Altitude		5,000 meters
Shock Test (Non-Operating)		50G, 11ms, 3 shocks for each direction
Vibration (Operating)		5-500Hz, 2Grms, 15 minute for each three axis

Power De-rating curves

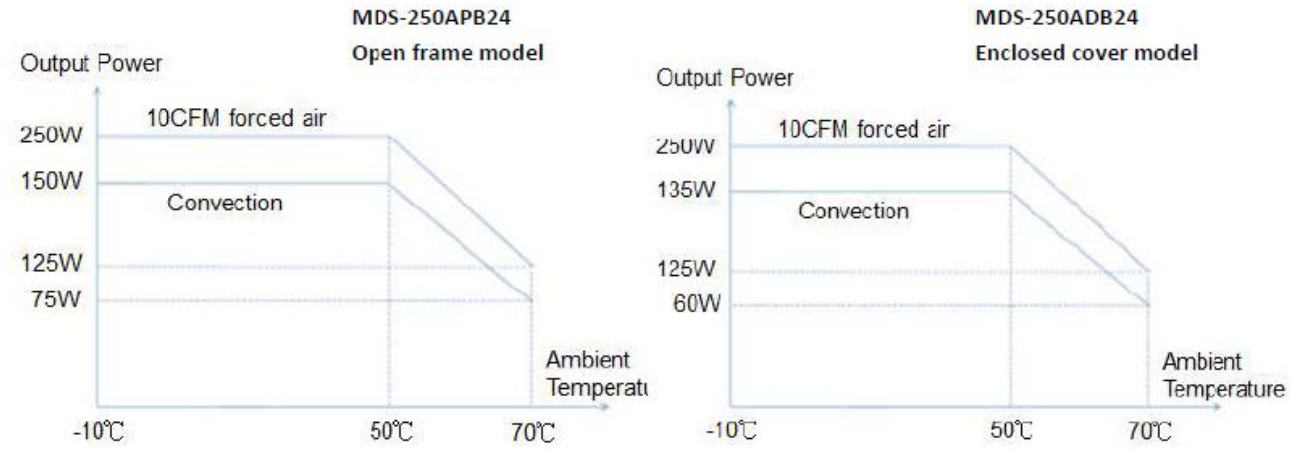

5.0 Production Life

>3years Cap Life (3years warranty)

(Measure and calculated at room temperature at 150W load with 115Vac and

convection cooling) at 35℃ ambient for MDS-250APB24 XX

(Measure and calculated at room temperature at 135W load with 115Vac and convection cooling) at 35 deg C ambient for MDS-250ADB24 XX

MTBF:

500 kHrs based on Telecordia SR-332

6.0 International Standard

6.1 Safety standards

Medical Safety		IEC60601-1, UL60601-1.TUV60601-1 2nd and 3rd edition, 3rd+A1
ITE Safety		IEC60950-1 (Ed.2,2005), UL60950-1, TUV60950-1 GB4943.1-2011, GB9254-2008, GB17625.1-2003
CE		MDD Directive 93/42/EEC
Material and Parts		RoHS Directive 2011/65/EU Compliant
Electrical Strength test voltage	Input to/Output Input to/Earth Output to/Earth	4000 Vac 2500 Vac 1500 Vac

6.2 EMC compliance

EMC / Emissions		Class I model: EN55011, EN55022, FCC Title 47: Class B
Immunity to		
Voltage Flicker	IEC61000-3-3	
Electrostatic Discharge	IEC61000-4-2	Level 4 Criteria A1) Air Discharge: 15kV Contact Discharge: 8kV
Radiated Field	IEC61000-4-3	Level 2 Criteria A1) 80MHz-1GHz, 3V/M with 1kHz tone / 80% modulation
Electrical Fast Transient / Burst	IEC61000-4-4	Level 3 Criteria A1) 2kV

Surge	IEC61000-4-5	Level 3 Criteria A[1)] Common Mode[2)]: 2kV Differential Mode[3)]: 1kV
Conducted	IEC61000-4-6	Level 2 Criteria A[1)] 150kHz-80MHz, 3Vrms
Power Frequency Magnetic Fields	IEC61000-4-8	Criteria A[1)] Magnetic field strength 3A/Meter
Voltage Dips	IEC61000-4-11	30% 10ms Criteria A ; 60% 100ms and 100% 5000ms Criteria B
Harmonic current	IEC61000-3-2	Meet Class D limit

1) Criteria A: Normal performance within the specification limits

2) Asymmetrical: Common mode (Line to earth)

3) Symmetrical: Differential mode (Line to line)

7.0Control signals

Control and STANDBY connector CN101	
Pin 1	Remote sense +
Pin 2	Remote sense –
Pin 3	Power Good +
Pin 4	Power Good - (GND)
Pin 5	Remote ON_OFF/INHIBIT +
Pin 6	Remote ON_OFF/INHIBIT - (GND)
Pin 7	5V Standby
Pin 8	GND
Pin 9	5V Standby
Pin 10	GND

7.1 Remote sense

Remote sense function can compensate the voltage drop at the output DC wires to system, compensate voltage is 500mV max. Remote sense + and Remote sense – pins short/reverse connection can be protected. PSU can work normally without remote sense connection and left open the remote sense pins.

7.2 Power Good

Power good pin is an open collector of transistor. A resistor (suggest 10Kohm, 1/8W) can be added between 5V STANDBY pin and Power good pin. Please see the attached picture. When AC input is on, power good pin will be high. When AC input is off, power good pin will be low. It will provide a minimum of 3ms (at 250W load and room temperature) warning of output drops to 90% of normal regulation.

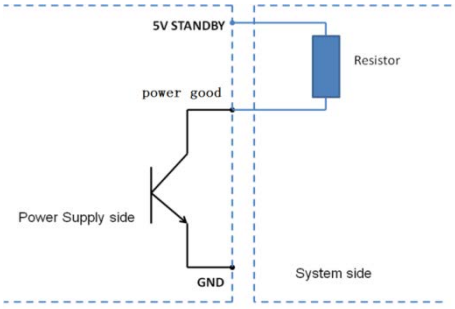

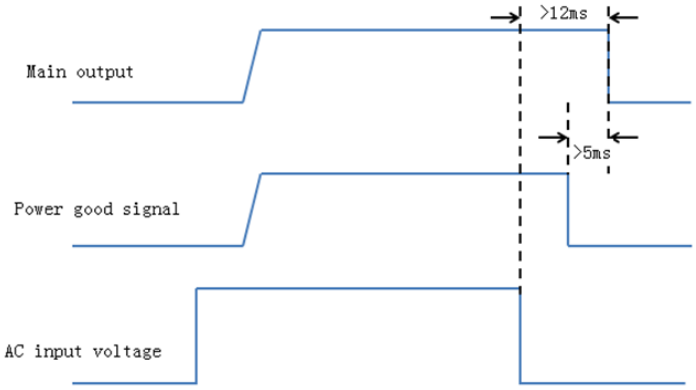

7.3 Remote ON_OFF/INHIBIT

Remote ON_OFF/INHIBIT can be used to disable the main output, only left standby working alone, user can pull the signal lower than 0.3V or short the signal to ground to enable the main output, left the signal open or pull it up to above 3V will disable the main output.

8.0 Mechanical test process:

8.1 Outline Dimensions

MDS-250APB24 XX (76.5x127.3x36.1mm)

MDS-250ADB24 XX (88.9x140.0x44.4mm)

8.2 PIN Assignment

ITEM	PIN NO	FUNCTION
CN1 (INPUT)	1	Neutral
	2	Line
CN2	1	GND
CN101 (CONTROL)	1	Remote Sense +
	2	Remote Sense -
	3	Power Good +
	4	Power Good - (GND)
	5	Remote ON_OFF / INHIBIT +
	6	Remote ON_OFF / INHIBIT - (GND)
	7	5V Standby
	8	DC RTN
	9	5V Standby
	10	DC RTN
CN102	1	Vo
CN103	1	D GND
CN2	1	PE

8.3 IP Degree : N/A

9.0 Mechanical test process:

(1) Vibration

a. Non-operation – Random

b.

Frequency	SNOP(dB/Oct)	PSD(g2/Hz)
5~100		0.015
100~137	-6dB	
137~350		0.008
350~500	-6dB	

c. Acceleration: 2.09Grms

d. Duration: 20 minutes for each three axis (X,Y,Z)

Simulated: Unit transportation

Specification: 1. PSU must operate with specification after non-operation test.

2. PSU shall be no mechanical damage after test.

(2) Shock

a. Non-operation - Half Sine

b. Pulse duration: 11ms

c. Peak acceleration: 50G

d. Number of shock: 3 shock for each direction.

Simulated: Unit transportation

Specification: 1. PSU must operate with specification after non-operation test.

2. PSU shall be no mechanical damage after test.

10.0 Product Application: Medical Power

10.1 Sample set up location for heating test:

Thermal Test Direction

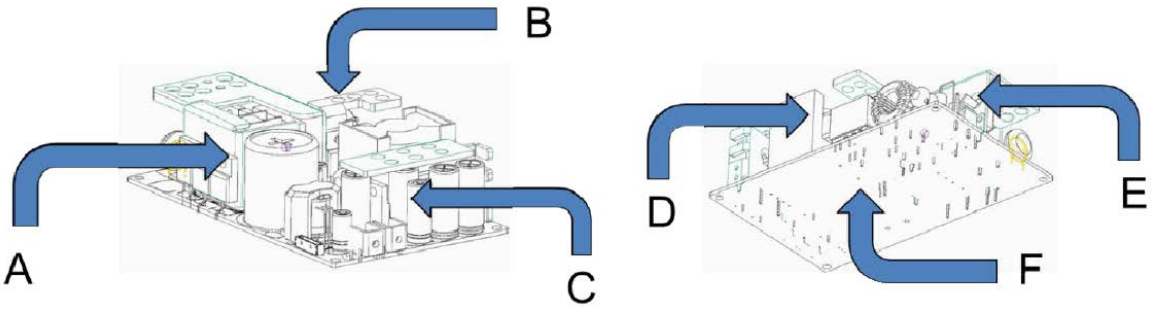

		A 面朝上	B 面朝上	C 面朝上	D 面朝上	E 面朝上	F 面朝上
有風	50℃	250W	250W	250W	250W	250W	
	70℃	125W	125W	125W	125W	125W	
無風	50℃	150W	150W		150W		
	70℃	75W	75W		75W		
有風情況 ： 風量 10CFM							

Test fixture diagram

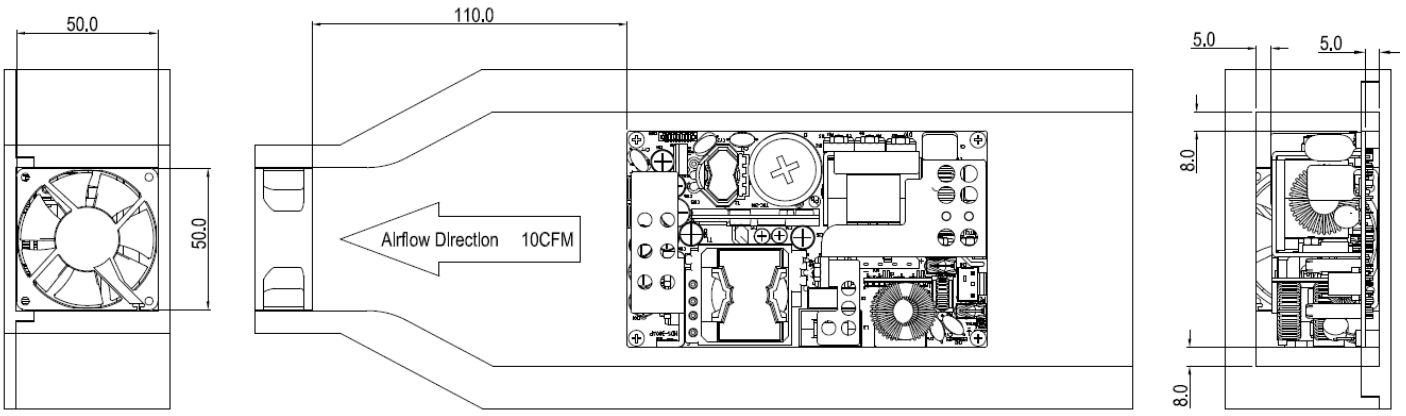

台達電子工業股份有限公司 DELTA ELECTRONICS, INC.				DESCRIPTION : 電氣規格(Electrical Specification)	
THESE DRAWINGS AND SPECIFICATIONS ARE THE PROPERTY OF DELTA ELECTRONICS, INC. AND SHALL NOT BE REPRODUCED OR USED AS THE BASIS FOR THE MANUFACTURE OR SELL OF APPARATUSES OR DEVICES WITHOUT PERMISSION.				MODEL NO. : MDS-250APB24 AB	
Date	Drawn	Design (EE)	Design (ME)	DOCUMENT NAME. : ES-250AXB24 SERIES	REV. S07
07/01/2016	呂翠娥	李振宏	游鈞皓		

3. Physical Dimension

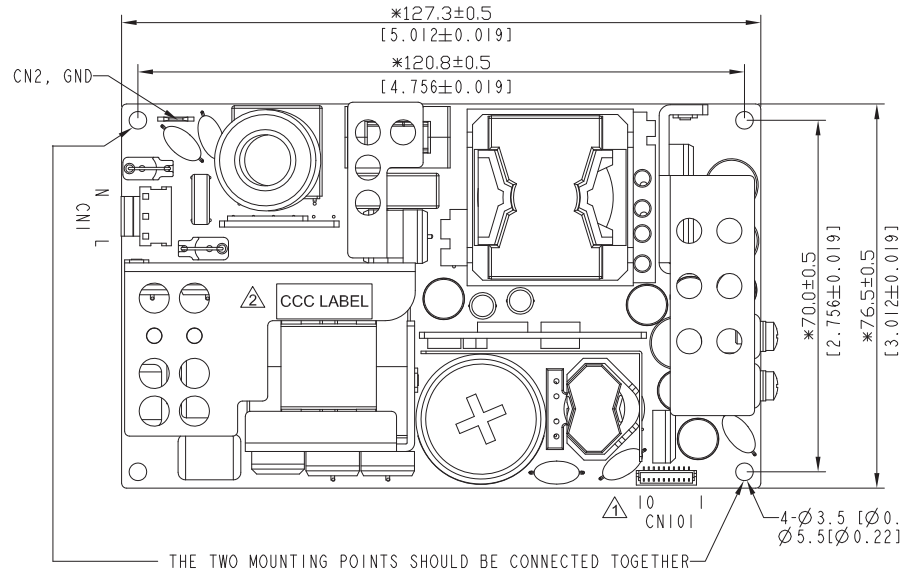

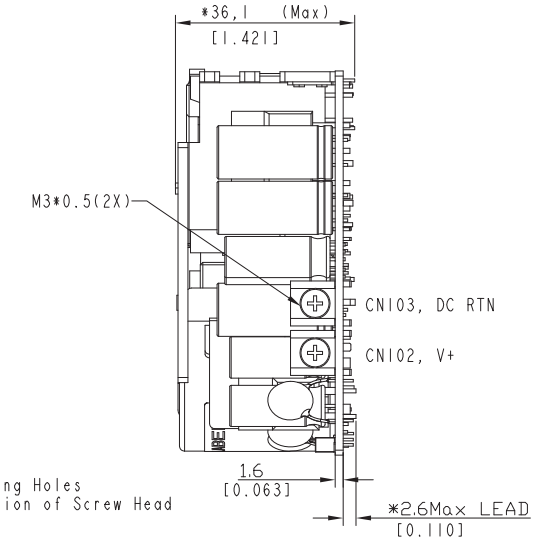

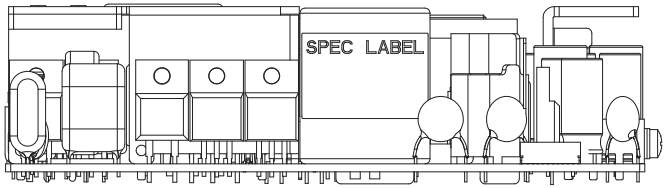

NOTES:
1. CN1(Molex 26-62-4030) MATES WITH MOLEX HOUSING 26-03-4030 AND MOLEX SERIES 6838 CRIMP TERMINALS. INPUT LINE CAN ALSO BE CONNECTED TO INPUT NEUTRAL, AND INPUT NEUTRAL CAN BE CONNECTED TO INPUT LINE.
2. CN102 & CN103(KANG YANG : PCB-12) : CROSS RECESSED PAN HEAD SCREWS M3X0.5X10, WITH SPRING WASHERS AND FLAT WASHERS, FORCE REQUIRED TO TIGHTEN THE SCREWS IS 7~8KGF.CM(6.1~7.0INCH-LB)
3. CN2 (PINGOOD JP-13T) MATES WITH KST:FDFNYD1-187 OR OTHER APPLICABLE CONNECTORS.
⚠1 4. CN101 (BM10B-SRSS-TB1(LF)(SN)) MATES WITH JST HOUSING SHR-10V-S AND JST SERIES SSH-003T-P0.2-H CRIMP TERMINAL.

Control and STANDBY connector CN101	
Pin1	Remote sense +
Pin2	Remote sense -
Pin3	Power Good +
Pin4	Power Good -(DC RTN)
Pin5	Remote ON_OFF/INHIBIT +
Pin6	Remote ON_OFF/INHIBIT -(DC RTN)
Pin7	5V Standby
Pin8	DC RTN
Pin9	5V Standby
Pin10	DC RTN

5. DIMENSIONS WITH " * " MARK MUST BE INSPECTED AND CONTROLLED STRICTLY BY IQC.
6. MODEL LIST : MDS-250APB12 AA, MDS-250APB12 AK, MDS-250APB24 AA;

台達電子工業股份有限公司
DELTA ELECTRONICS, INC.

Drawn: LEO.WU 11/16'23

Design: LEO.WU 11/16'23

THESE DRAWINGS AND SPECIFICATIONS ARE THE PROPERTY OF DELTA ELECTRONICS, INC. AND SHALL NOT BE REPRODUCED OR USED AS THE BASIS FOR THE MANUFACTURE OR SELL OF APPARATUSES OR DEVICES WITHOUT PERMISSION.

THIRD ANGLE PROJECTION

Description: PHYSICAL DIMENSION

DIMENSIONAL TOLERANCES HOLES : ±0.05 ANGLES : ±0.5°

( )		(V)		( )		( )	
<30	: ±0.25	DECIMALS		UP~100	: ±0.2	250~300	: ±0.4	UP~600	: ±1.5
>30~100	: ±0.35	X	: ±0.3	100~150	: ±0.25	300~350	: ±0.45	600~900	: ±2.4
>100~300	: ±0.5	X.X	: ±0.2	150~200	: ±0.3	350~400	: ±0.5	900~OVER	: ±3.1
ABOVE 300	: ±0.6	X.XX	: ±0.1	200~250	: ±0.35				

A3 SIZE

Part No. MDS-250APBXX SERIES

REV. 02

SCALE	--	UNIT	mm	USED ON	MDS-250APBXX SERIES

SHEET 2 OF 3 ISSUE DATE: 11/16'23

FRAME NAME: DF-MEA3H-1R01.DWG

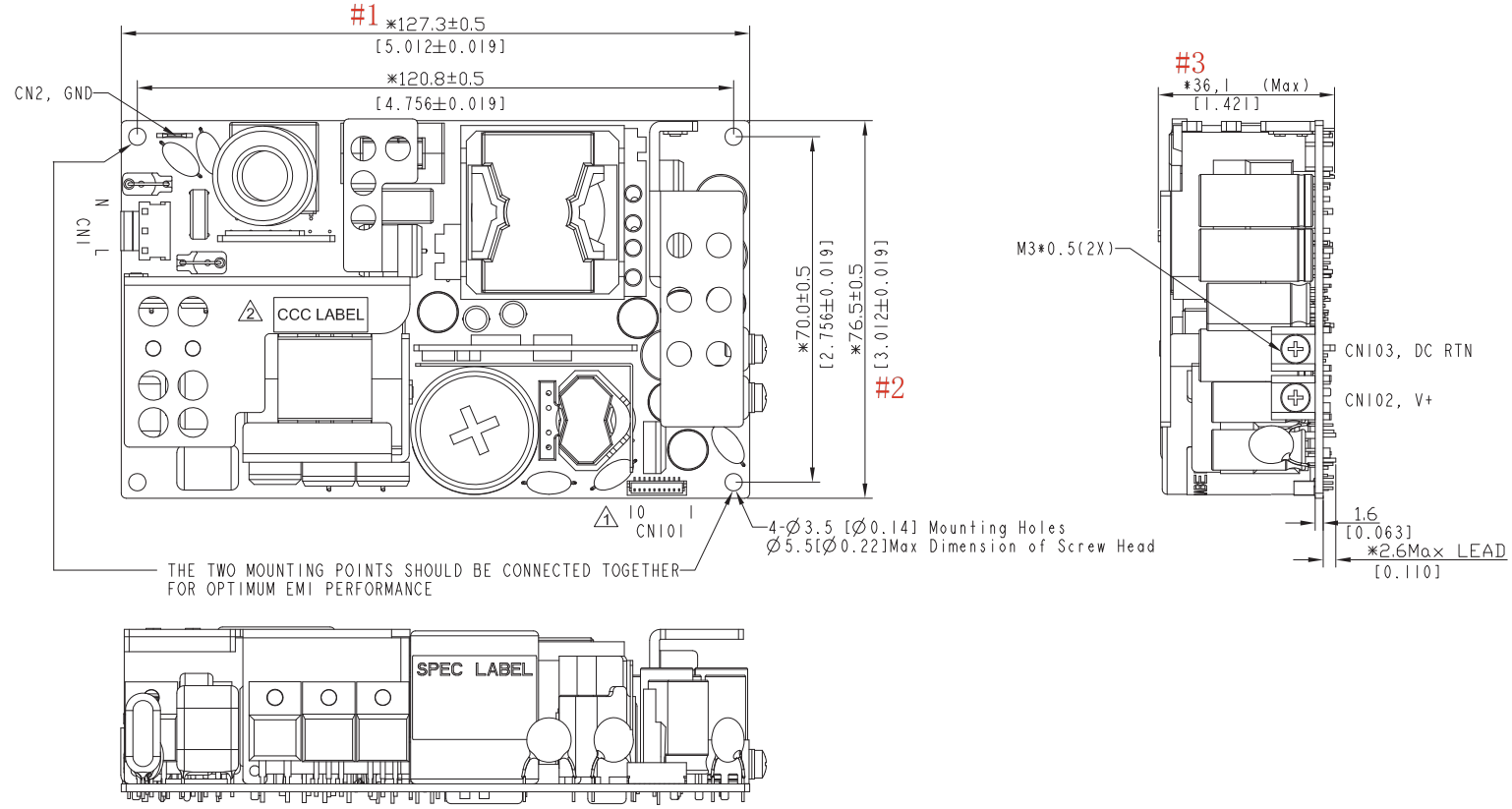

NOTES:
1. CN1(Molex 26-62-4030) MATES WITH MOLEX HOUSING 26-03-4030 AND MOLEX SERIES 6838 CRIMP TERMINALS. INPUT LINE CAN ALSO BE CONNECTED TO INPUT NEUTRAL, AND INPUT NEUTRAL CAN BE CONNECTED TO INPUT LINE.
2. CN102 & CN103(KANG YANG : PCB-12) : CROSS RECESSED PAN HEAD SCREWS M3X0.5X10, WITH SPRING WASHERS AND FLAT WASHERS, FORCE REQUIRED TO TIGHTEN THE SCREWS IS 7~8KGF.CM(6.1~7.0INCH-LB)
3. CN2 (PINGOOD JP-13T) MATES WITH KST:FDFNYD1-187 OR OTHER APPLICABLE CONNECTORS.
⚠1 4. CN101 (BM10B-SRSS-TB1(LF)(SN)) MATES WITH JST HOUSING SHR-10V-S AND JST SERIES SSH-003T-P0.2-H CRIMP TERMINAL.

Control and STANDBY connector CN101	
Pin1	Remote sense +
Pin2	Remote sense -
Pin3	Power Good +
Pin4	Power Good -(DC RTN)
Pin5	Remote ON_OFF/INHIBIT +
Pin6	Remote ON_OFF/INHIBIT -(DC RTN)
Pin7	5V Standby
Pin8	DC RTN
Pin9	5V Standby
Pin10	DC RTN

5. DIMENSIONS WITH " * " MARK MUST BE INSPECTED AND CONTROLLED STRICTLY BY IQC.
6. MODEL LIST : MDS-250APB12 AB, MDS-250APB24 AB;

設計驗證 工程課 2026-01-09 發行 台達電子工業股份有限公司

台達電子工業股份有限公司
DELTA ELECTRONICS, INC.

Drawn: LEO.WU 11/16'23
Design: LEO.WU 11/16'23

THESE DRAWINGS AND SPECIFICATIONS ARE THE PROPERTY OF DELTA ELECTRONICS, INC. AND SHALL NOT BE REPRODUCED OR USED AS THE BASIS FOR THE MANUFACTURE OR SELL OF APPARATUSES OR DEVICES WITHOUT PERMISSION.

THIRD ANGLE PROJECTION

Description: PHYSICAL DIMENSION

DIMENSIONAL TOLERANCES HOLES : ±0.05 ANGLES : ±0.5°

( )		(V)		( )		( )	
<30	: ±0.25	DECIMALS		UP~100	: ±0.2	250~300	: ±0.4	UP~600	: ±1.5
>30~100	: ±0.35	X	: ±0.3	100~150	: ±0.25	300~350	: ±0.45	600~900	: ±2.4
>100~300	: ±0.5	X.X	: ±0.2	150~200	: ±0.3	350~400	: ±0.5	900~OVER	: ±3.1
ABOVE 300	: ±0.6	X.XX	: ±0.1	200~250	: ±0.35				

A3 SIZE

Part No. MDS-250APBXX SERIES

REV. 02

SCALE	--	UNIT	mm	USED ON	MDS-250APBXX SERIES

SHEET 3 OF 3 ISSUE DATE: 11/16'23

FRAME NAME: DF-MEA3H-1R01.DWG

4.Label Drawing

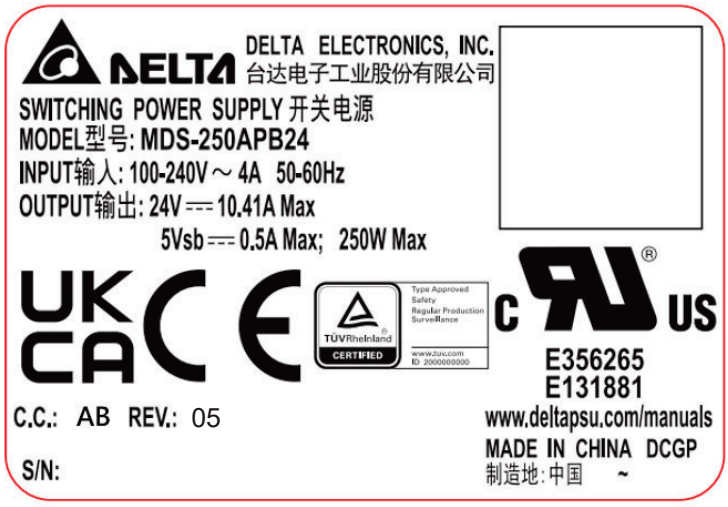



SCALE 5:1

DELTA CONFIDENTIAL

台達電子工業股份有限公司 DELTA ELECTRONICS, INC.		Drawn:	Design:
THESE DRAWINGS AND SPECIFICATIONS ARE THE PROPERTY OF DELTA ELECTRONICS, INC. AND SHALL NOT BE REPRODUCED OR USED AS THE BASIS FOR THE MANUFACTURE OR SELL OF APPARATUSES OR DEVICES WITHOUT PERMISSION.	THIRD ANGLE PROJECTION	Description:	
DIMENSIONAL TOLERANCES ( ) <30 : ±0.25 >30~100 : ±0.35 >100~300 : ±0.5 ABOVE 300 : ±0.6 (V) DECIMALS X : ±0.3 X.X : ±0.2 X.XX : ±0.1 ( ) UP~100 : ±0.2 100~150 : ±0.25 150~200 : ±0.3 200~250 : ±0.35 250~300 : ±0.4 300~350 : ±0.45 350~400 : ±0.5 ( ) UP~600 : ±1.5 600~900 : ±2.4 900~OVER : ±3.1 HOLES : ±0.05 ANGLES : ±0.5°	A4 SIZE	Part No.	REV. 00
SCALE -- UNIT mm USED ON		SHEET 2 OF 2	ISSUE DATE:

FRAME NAME: DF-MEA4V-1R01.DWG

5. Packing

NOTES:

1. 30PCS/CARTON*2*2CARTONS/LAYER*5LAYERS=600PCS/PALLET
2. ALL THE PACKING MATERIAL SHOULD MEET DELTA GENERAL SPEC:10000-0162.

ITEM	PART NO.	NAME	OUTSIDE DIM.(mm)	Q'TY	EXPLAIN
01	3522004000	AIR BUBBLE BAG	195X140	1/1	
02	3510803400	PAD PAPER	580X380X8	2/30	
03	3514361900	PARTITION	582X382X146	1/30	
04	3512319600	CARTON	600X400X190	1/30	
05	3524029000	PALLET	1200X800X120	1/600	
06	3510180100	ANGLE PAPER	1100X55X55	2/600	
07	3511706800	ANGLE PAPER	550X55X55	2/600	
08	3520142700	PLASTIC STRIP	W=12 T=0.5	18/600	
09	3520142800	STAPLE WIRE	28.0X21.5	4/600	
10	3520089900	PE SHEET	1500X1300	1/600	
11	3520082400	PE FILM	t=0.02mm	1g/600	

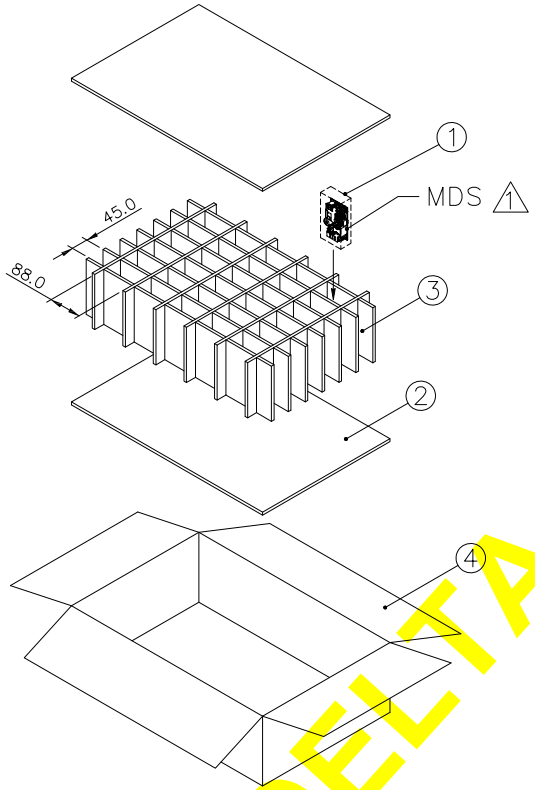

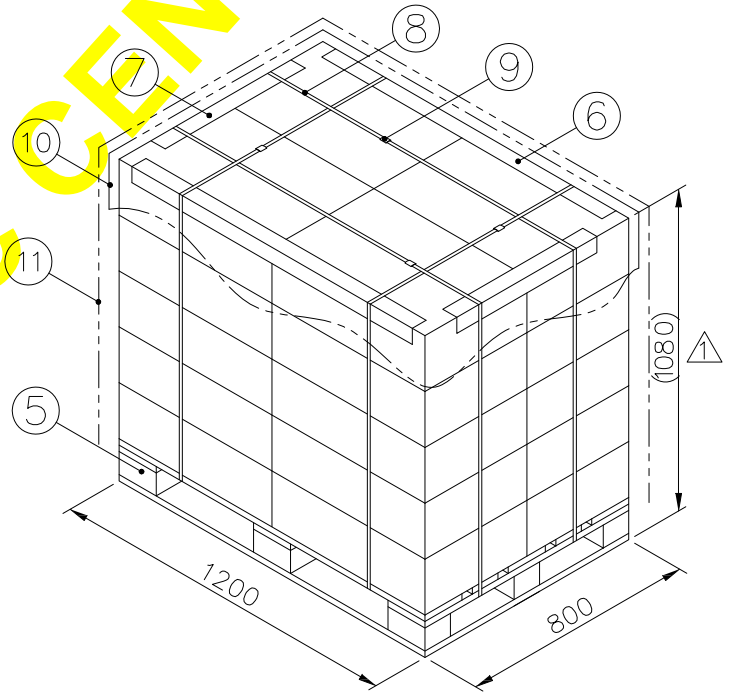

DELTA DOC CENTER

台達電子工業股份有限公司
DELTA ELECTRONICS, INC.

Drawn: XUEJUE 03/18'15

Design: WU.XIAOJUN 03/18'15

THESE DRAWINGS AND SPECIFICATIONS ARE THE PROPERTY OF DELTA ELECTRONICS, INC. AND SHALL NOT BE REPRODUCED OR USED AS THE BASIS FOR THE MANUFACTURE OR SELL OF APPARATUSES OR DEVICES WITHOUT PERMISSION.

THIRD ANGLE PROJECTION

Description: PML

DIMENSIONAL TOLERANCES HOLES : ±0.05 ANGLES : ±0.5°

( )		( )		( )		( )	
<30	: ±0.25	DECIMALS		UP~100	: ±0.2	250~300	: ±0.4	UP~600	: ±1.5
>30~100	: ±0.35	X	: ±0.3	100~150	: ±0.25	300~350	: ±0.45	600~900	: ±2.4
>100~300	: ±0.5	X.X	: ±0.2	150~200	: ±0.3	350~400	: ±0.5	900~OVER	: ±3.1
ABOVE 300	: ±0.6	X.XX	: ±0.1	200~250	: ±0.35				

A3 SIZE

Part No. 3525408401

REV. 01

SCALE	--	UNIT	mm	USED ON	MDS-300APB24 AA

SHEET 2 OF 2 ISSUE DATE: 03/18'15

FRAME NAME: DF-MEA3H-1R01.DWG