版本 REV.	日 期 DATE	DCN NO.	变更内容 DESCRIPTION	制图 DRAWN

成品规格图号DRAWING NO. W2011025S

No. of Contacts	DIMENSIONS A	B
2	2.00	6.00
3	4.00	8.00
4	6.00	10.00
5	8.00	12.00
6	10.00	14.00
7	12.00	16.00
8	14.00	18.00
9	16.00	20.00
10	18.00	22.00
11	20.00	24.00
12	22.00	26.00
13	24.00	28.00
14	26.00	30.00
15	28.00	32.00
16	30.00	34.00

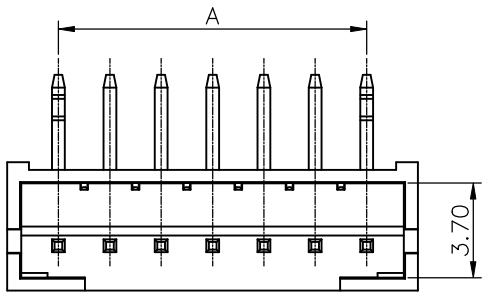

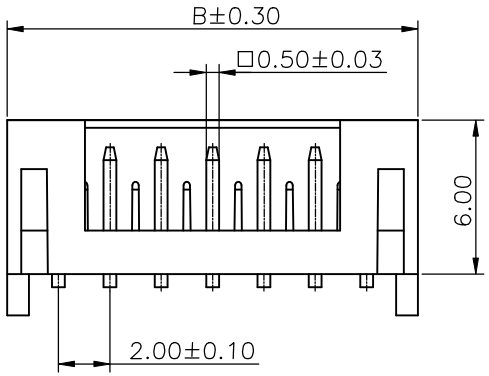

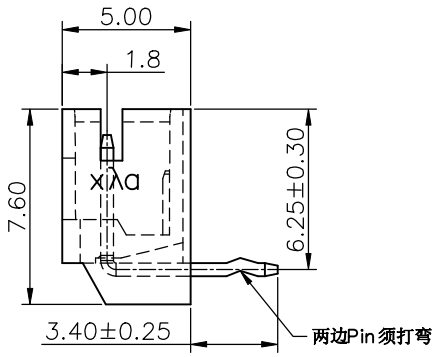

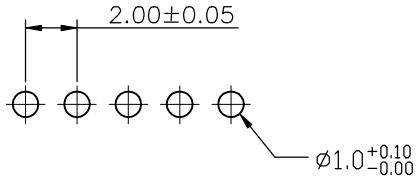

P.C.B LAYOUT

Product Code:

W2011 – XX R XX – S X 1 – B X
① ② ③ ④ ⑤ ⑥ ⑦

① Series NO.

② Circuits number

③ R: Right angle

④ Plating Code:

⑤ 0: Color is Nature
B: Color is Black

⑥ SOLDER AREA LENGTH

⑦ NONE: HALOGEN PART
H: HALOGEN FREE PART

Definition	Code
◎ Tin plated:	VA
◎ Matte Tin plated	WA
Prefix "V""W" means lead free plating	

SPECIFICATIONS:

1. Temperature range: −25℃ ~+85℃
2. Voltage rating: 250V,AC,DC
3. Current rating: 2A
4. Contact resistance: 10 mΩ Max
5. Insulation resistance: 1000MΩ Min
6. Withstand voltage: 800V,AC/minute
7. Material:
   HOUSING: PA66 , UL 94V–0.
   CONTACT: Copper Alloy

GENERL TOLERANCE		制 图 (DR.)		料 号 PART NO.	W2011–XXRXX–SX1–BX	版 本 REV.	A
X.±0.30	X.°±2°	审 核 (CHK.)		品 名 TITLE	P2.0 Wafer	页 次 SHEET	1/1
.X±0.25	.X°±1°	核 准 (APPD.)		客户料号 CUTM.NO.			
.XX±0.20	.XX°±0.5°	第1版 (OR.D.)	2018.12.19	Xya 苏州新亚电通股份有限公司 SUZHOU XINYA ELECTRIC COMMUNICATION Co.,LTD.			
.XXX±0.10	.XXX°±0.5°	单 位 UNITS	MM 比 例 SCALE 1:1				