Doc. Number :

☐Tentative Specification
☐Preliminary Specification
■Approval Specification

MODEL NO.: R315DCJ
SUFFIX: KS4

3TFTLCD316A (T0187)

Customer: Valued Customer

APPROVED BY **SIGNATURE**

Name / Title
Note

設計驗證
工程課
2026 -03- 24
發行
群創光電股份有限公司

Please return 1 copy for your confirmation with your signature and comments.

Approved By	Checked By	Prepared By
YUHSIANG.CHANG	YENYU.CHEN	RONGCHIN.KUO

The copyright belongs to InnoLux. Any unauthorized use is prohibited.

CONTENTS

1. GENERAL DESCRIPTION 5
1.1 OVERVIEW 5
1.2 GENERAL SPECIFICATIONS 5
2. MECHANICAL SPECIFICATIONS 6
3. ABSOLUTE MAXIMUM RATINGS 6
3.1 ABSOLUTE RATINGS OF ENVIRONMENT 6
3.2 ELECTRICAL ABSOLUTE RATINGS 7
3.2.1 TFT LCD MODULE 7
3.2.2 BACKLIGHT UNIT 7
4. ELECTRICAL SPECIFICATIONS 7
4.1 FUNCTION BLOCK DIAGRAM 7
4.2. INTERFACE CONNECTIONS 8
4.3 ELECTRICAL CHARACTERISTICS 10
4.3.1 LCD ELETRONICS SPECIFICATION 10
4.3.2. Vcc Power Dip Condition 12
4.3.3.BACKLIGHT UNIT 12
4.3.4 CONVERTER ELECTRICAL CHARACTERISTICS 13
4.3.5 CONVERTER INPUT CONNECTOR PIN ASSIGNMENT 16
4.4 V BY ONE INPUT SIGNAL SPECIFICATIONS 16
4.4.1 V BY ONE DATA MAPPING TABLE 16
4.4.2 COLOR DATA INPUT ASSIGNMENT 17
4.5 DISPLAY TIMING SPECIFICATIONS 18
4.6 V BY ONE INPUT SIGNAL TIMING DIAGRAM 20
4.7 BYTE LENGTH AND COLOR MAPPING OF V-BY-ONE HS 21
4.8 POWER ON/OFF SEQUENCE 22
5. OPTICAL CHARACTERISTICS 24
5.1 TEST CONDITIONS 24
5.2 OPTICAL SPECIFICATIONS 24
6. RELIABILITY TEST ITEM 27
7. PACKING 28
7.1 PACKING SPECIFICATIONS 28
7.2 PACKING METHOD 28
7.3 PALLET 29
7.4 UN-PACKING METHOD 30
8. INX MODULE LABEL 31

The copyright belongs to InnoLux. Any unauthorized use is prohibited.

9. PRECAUTIONS 32
9.1 ASSEMBLY AND HANDLING PRECAUTIONS 32
9.2 STORAGE PRECAUTIONS 32
9.3 OPERATION PRECAUTIONS 33
9.4 SAFETY PRECAUTIONS 33
9.5 SAFETY STANDARDS 33
9.6 OTHER 33
Appendix . OUTLINE DRAWING 34

The copyright belongs to InnoLux. Any unauthorized use is prohibited.

REVISION HISTORY

Version	Date	Page	Description
3.0	15th,Jul ,2025	All	Spec. Ver.3.0 was first issued.

The copyright belongs to InnoLux. Any unauthorized use is prohibited.

1. GENERAL DESCRIPTION

1.1 OVERVIEW

R315DCJ-KS4 is a 31.5” TFT Liquid Crystal Display medical module with WLED Backlight unit and 51 pins 8 lane – V by 1 interface. This module supports 3840 x 2160 UHD(Ultra High Definition) mode and can display up to 1.073G colors. The LCD module includes built-in converter for backlight and interlace led design for surgery application.

1.2 GENERAL SPECIFICATIONS

Item	Specification	Unit	Note
Screen Size	31.5” real diagonal	mm	
Driver Element	a-si TFT active matrix	-	-
Pixel Number	3840 x R.G.B. x 2160	pixel	-
Pixel Pitch	0.181 (H) x 0.181 (V)	mm	-
Pixel Arrangement	RGB vertical stripe	-	-
Display Colors	1.073G	color	-
Transmissive Mode	Normally Black	-	-
Surface Treatment	AG type, 3H hard coating, Haze 25	-	-
Color Gamut	102% of NTSC(Typ.)	-	-
Luminance, White	850	Cd/m2	
Power Consumption	Total 92.1 W(Typ.) @ cell 25.6 W(Typ.), BLU 66.5 W(Typ.)		(1)

Note (1) The specified power consumption : Total= cell (reference 4.3.1)+ Coverter (reference 4.3.4)

Note (2)

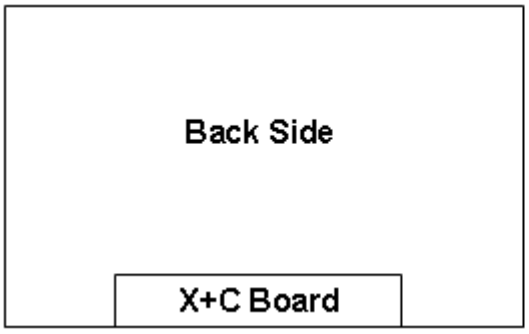

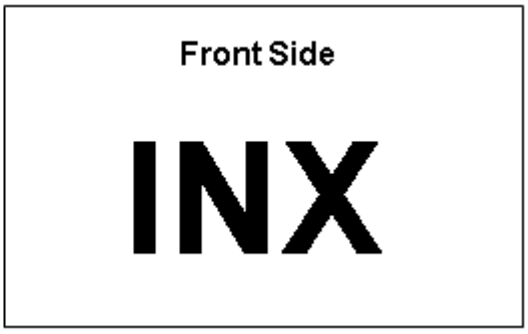

The copyright belongs to InnoLux. Any unauthorized use is prohibited.

2. MECHANICAL SPECIFICATIONS

Item		Min.	Typ.	Max.	Unit	Note
Module Size	Horizontal (H)	716.9	717.4	717.9	mm	(1)
	Vertical (V)	415.25	415.75	416.25	mm	
	Thickness (T)	23.4	24	24.6	mm	
Bezel Area	Horizontal	702.9	703.4	703.9	mm	
	Vertical	397.35	397.85	398.35	mm	
Active Area	Horizontal	-	697.31	-	mm	
	Vertical	-	392.23	-	mm	
Weight		4505	4693	4880	g	

Note (1) Please refer to the attached drawings for more information of front and back outline dimensions.

3. ABSOLUTE MAXIMUM RATINGS

3.1 ABSOLUTE RATINGS OF ENVIRONMENT

Item	Symbol	Value		Unit	Note
		Min.	Max.		
Storage Temperature	TST	-20	60	℃	(1)
Operating Ambient Temperature	TOP	0	50	℃	(1), (2)

Note (1)

(a) 90 %RH Max..

(b) Wet-bulb temperature should be 39 ℃ Max.

(c) No condensation.

Note (2) Panel surface temperature should be 0℃ min. and 60℃ max.

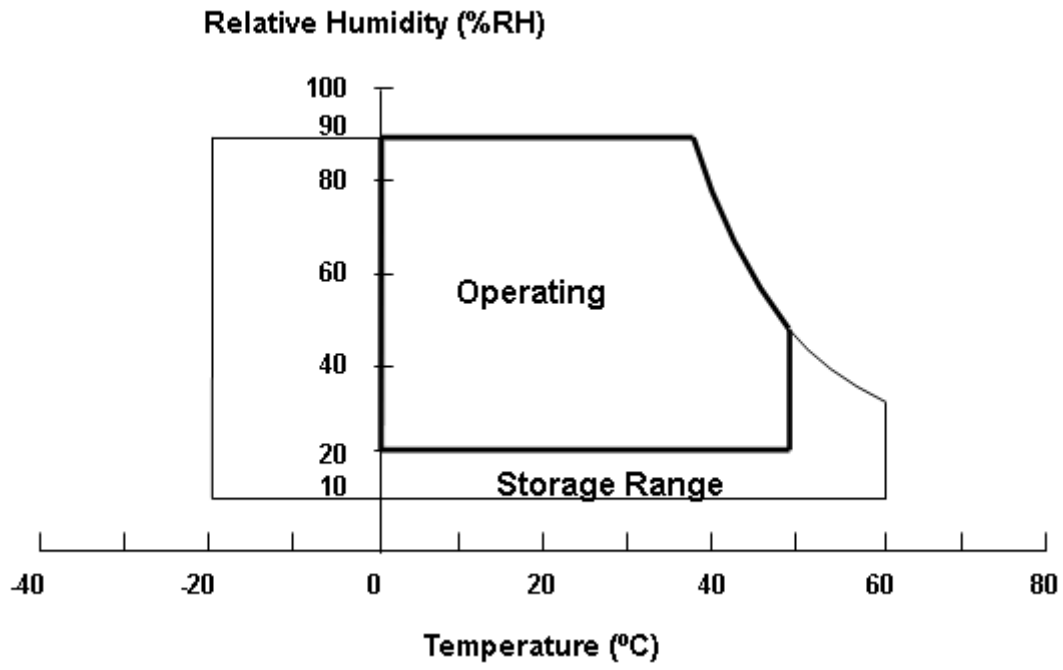

The copyright belongs to InnoLux. Any unauthorized use is prohibited.

3.2 ELECTRICAL ABSOLUTE RATINGS

3.2.1 TFT LCD MODULE

Item	Symbol	Value		Unit	Note
		Min.	Max.		
Power Supply Voltage	VCCS	-0.3	13.5	V	(1)
Logic Input Voltage	VIN	-0.3	3.6	V	

3.2.2 BACKLIGHT UNIT

Item	Symbol	Value			Unit	Note
		Min.	Typ	Max.		
LED Forward Current Per Input Pin	IF	-	-	200	mA	(1), (2) Duty=100%

Note (1) Permanent damage to the device may occur if maximum values are exceeded. Function operation should be restricted to the conditions described under Normal Operating Conditions.

Note (2) Specified values are for input pin of LED light bar at Ta=25±2 ℃ (Refer to 4.3.3 and 4.3.4 for further information).

4. ELECTRICAL SPECIFICATIONS

4.1 FUNCTION BLOCK DIAGRAM

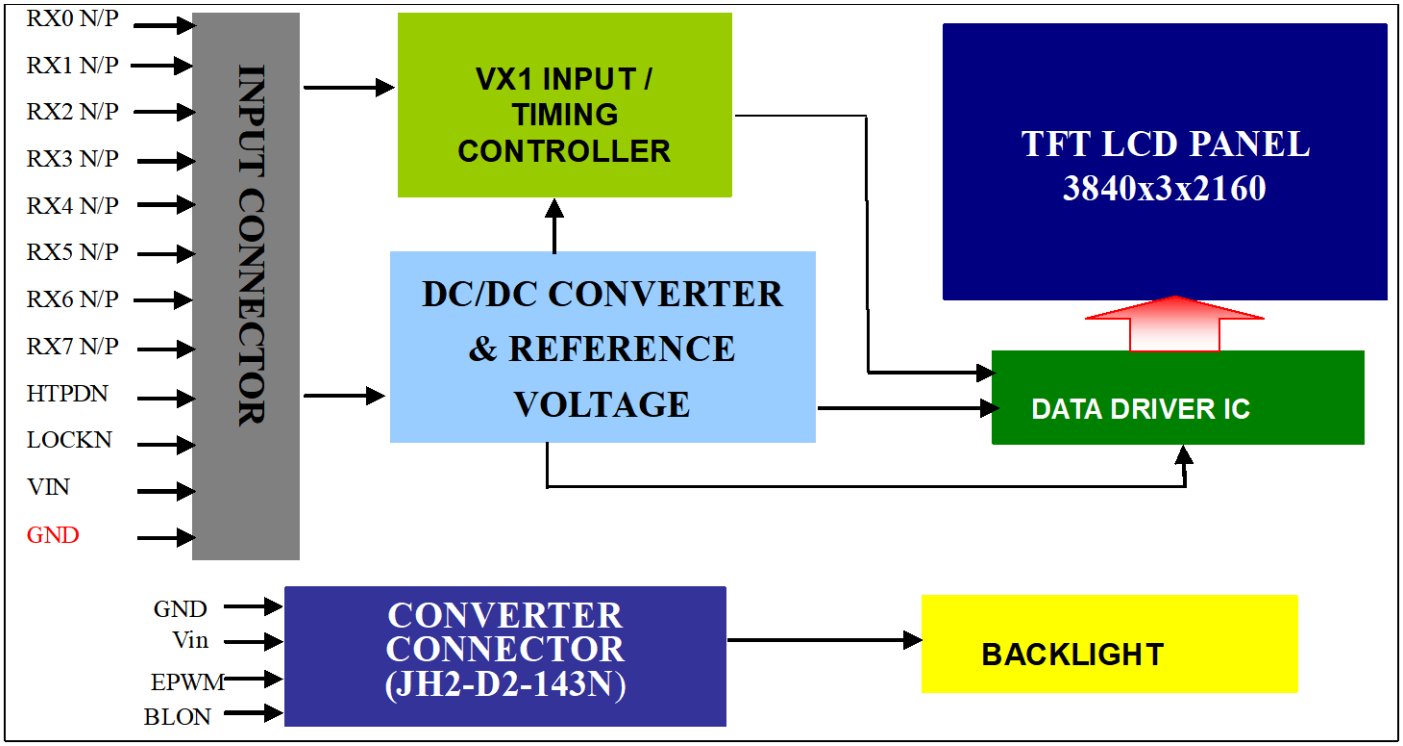

The copyright belongs to InnoLux. Any unauthorized use is prohibited.

4.2. INTERFACE CONNECTIONS

PIN ASSIGNMENT

Pin	Name	Description	Note
1	Vin	Power input (+12V)	
2	Vin	Power input (+12V)	
3	Vin	Power input (+12V)	
4	Vin	Power input (+12V)	
5	Vin	Power input (+12V)	
6	Vin	Power input (+12V)	
7	Vin	Power input (+12V)	
8	Vin	Power input (+12V)	
9	N.C.	No Connection	(2)
10	GND	Ground	
11	GND	Ground	
12	GND.	Ground	
13	GND.	Ground	
14	GND.	Ground	
15	N.C.	No Connection	(2)
16	N.C.	No Connection	(2)
17	N.C.	No Connection	(2)
18	N.C	For internal use, no connection	(2)
19	N.C	For internal use, no connection	(2)
20	N.C.	No Connection	(2)
21	N.C.	No Connection	(2)
22	N.C.	No Connection	(2)
23	N.C.	No Connection	(2)
24	N.C.	No Connection	(2)
25	HTPDN	Hot plug detect output, Open drain.	
26	LOCKN	Lock detect output, Open drain.	
27	GND	Ground	
28	RX0N	1st Pixel Negative VbyOne differential data input in area A. Lan 0	(1)
29	RX0P	1st Pixel Positive VbyOne differential data input in area A. Lan 0	
30	GND	Ground	
31	RX1N	2nd Pixel Negative VbyOne differential data input in area A. Lan 1	(1)
32	RX1P	2nd Pixel Positive VbyOne differential data input in area A. Lan 1	
33	GND	Ground	
34	RX2N	3rd Pixel Negative VbyOne differential data input in area A. Lan 2	(1)
35	RX2P	3rd Pixel Positive VbyOne differential data input in area A. Lan 2	
36	GND	Ground	
37	RX3N	4th Pixel Negative VbyOne differential data input in area A. Lan 3	(1)
38	RX3P	4th Pixel Positive VbyOne differential data input in area A. Lan 3	
39	GND	Ground	
40	RX4N	5th Pixel Negative VbyOne differential data input in area A. Lan 4	(1)
41	RX4P	5th Pixel Positive VbyOne differential data input in area A. Lan 4	
42	GND	Ground	
43	RX5N	6th Pixel Negative VbyOne differential data input in area A. Lan 5	(1)
44	RX5P	6th Pixel Positive VbyOne differential data input in area A. Lan 5	
45	GND	Ground	
46	RX6N	7th Pixel Negative VbyOne differential data input in area A. Lan 6	(1)
47	RX6P	7th Pixel Positive VbyOne differential data input in area A. Lan 6	
48	GND	Ground	

The copyright belongs to InnoLux. Any unauthorized use is prohibited.

Pin	Name	Description	Note
49	RX7N	8th Pixel Negative VbyOne differential data input in area A. Lan 7	(1)
50	RX7P	8th Pixel Positive VbyOne differential data input in area A. Lan 7	
51	GND	Ground	

Connector Information

Item	Description
Manufacturer	FCN/ P-TWO
Type part number	FCN: WF23-402-5133 P-TWO: 1870208-51AE1N001
User's Mating housing part number	JAE: FI-RE51HL

*Notice: There would be compatible issues if not using the indicated connectors in the matching list.

Note (1) V-by-One® HS Data Mapping

Lan	Data Stream
Lan 0	1, 9, 17, ..., 3825, 3833
Lan 1	2, 10, 18, ..., 3826, 3834
Lan 2	3, 11, 19, ..., 3827, 3835
Lan 3	4, 12, 20, ..., 3828, 3836
Lan 4	5, 13, 21, ..., 3829, 3837
Lan 5	6, 14, 22, ..., 3830, 3838
Lan 6	7, 15, 23, ..., 3831, 3839
Lan 7	8, 16, 24, ..., 3832, 3840

Note (2) Reserved for internal use. Please leave it open.

Note (3) V-by-One® HS connector pin order defined as following:

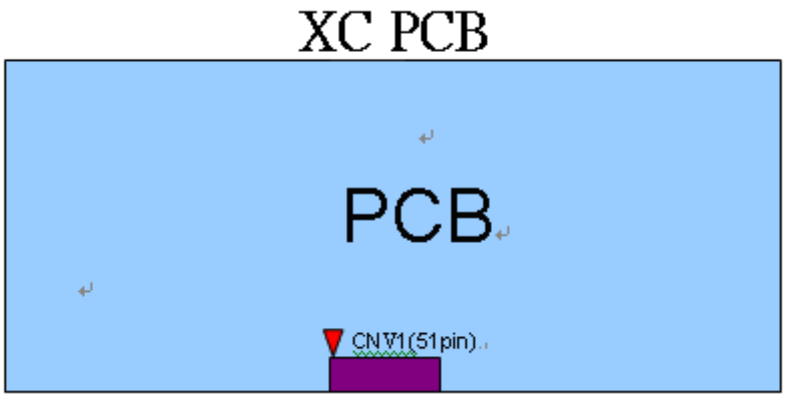

Note (4) V-by-One connector mating dimension range request is 0.93mm~1.0mm as below:

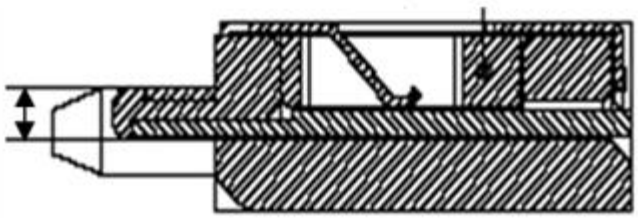

The copyright belongs to InnoLux. Any unauthorized use is prohibited.

Note (5) Pixel should be arranged as the picture.

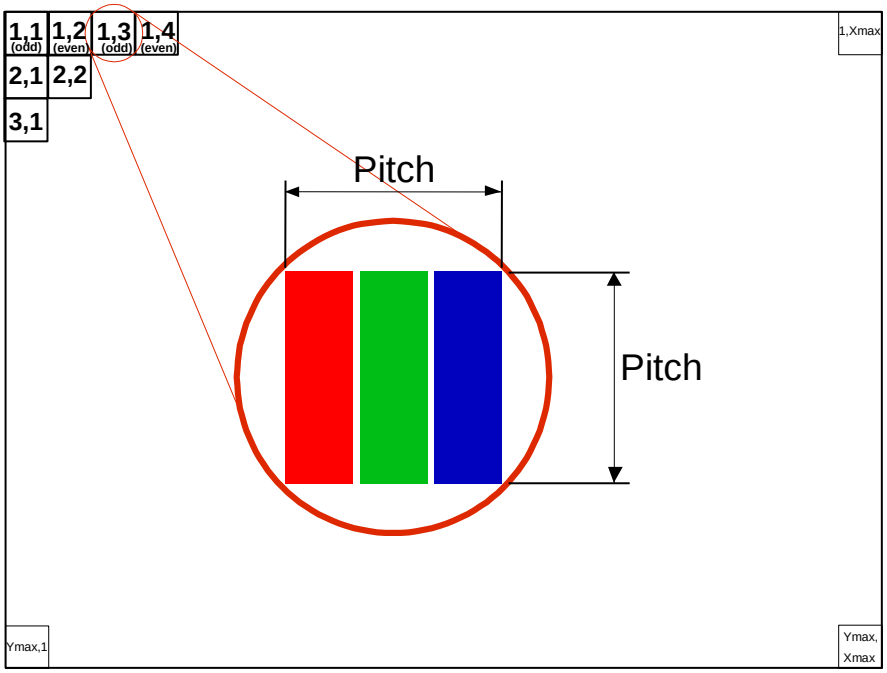

4.3 ELECTRICAL CHARACTERISTICS

4.3.1 LCD ELETRONICS SPECIFICATION

(Ta = 25 ± 2 ºC)

Parameter		Symbol	Value			Unit	Note
			Min.	Typ.	Max.		
Power Supply Voltage		V_{CC}	10.8	12	13.2	V	(1)
Rush Current		I_{RUSH}	—	—	3	A	(2)
Power Consumption	White Pattern	P_T	-	25.61	27.94	W	(3)
	Black Pattern	P_T	-	8.98	9.79	W	
	Horizontal Stripe	P_T	-	25.48	27.79	W	
Power Supply Current	White Pattern	—	-	2.13	2.33	A	(3)
	Black Pattern	—	-	0.75	0.82	A	
	Horizontal Stripe	—	-	2.12	2.32	A	
V-by-One HS	Differential Input High Threshold Voltage	VLVTH	—	—	+50	mV	
	Differential Input Low Threshold Voltage	VLVTL	-50	—	—	mV	
	Differential Input Resistor	RRIN	80	100	120	ohm	
CMOS interface	Input High Threshold Voltage	VIH	2.7	—	3.3	V	
	Input Low Threshold Voltage	VIL	0	—	0.7	V	

The copyright belongs to InnoLux. Any unauthorized use is prohibited.

Note (1) The module should be always operated within the above ranges. The ripple voltage should be controlled under 10 % of Vcc (Typ.)

Note (2) Measurement Conditions

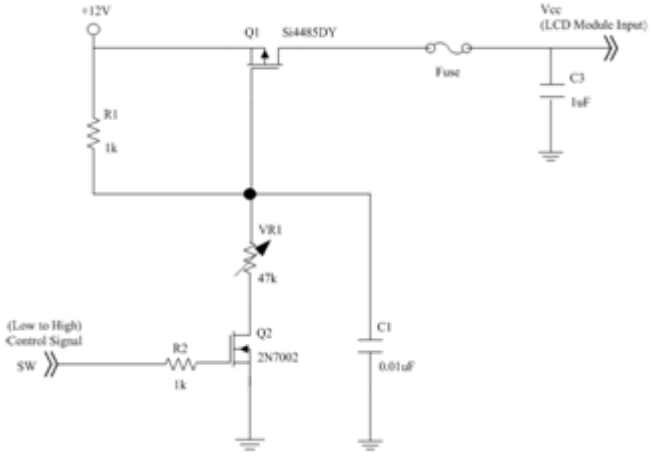

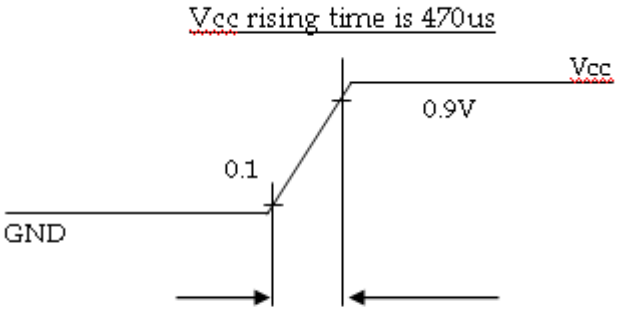

Note (3) The specified power supply current is under the conditions at Vcc = 12 V, Ta = 25 ± 2 ºC, Fr = 60Hz, whereas a power dissipation check pattern below is displayed.

a. White Pattern



Active Area

b. Black Pattern



Active Area

c. Horizontal Pattern

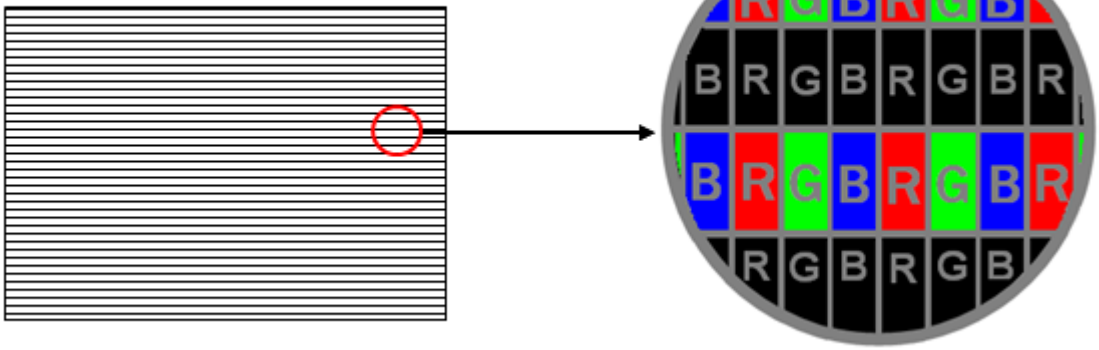

The copyright belongs to InnoLux. Any unauthorized use is prohibited.

4.3.2. Vcc Power Dip Condition

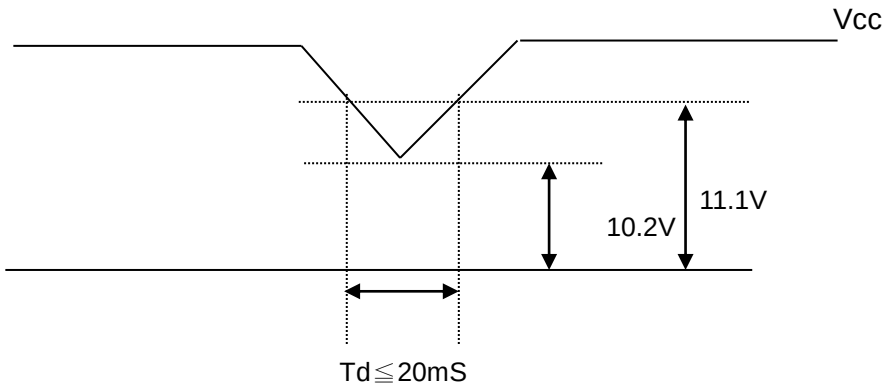

4.3.3.BACKLIGHT UNIT

Parameter	Symbol	Value			Unit	Note
		Min.	Typ.	Max.		
LED Light Bar Input Voltage Per Input Pin	VPIN	37.7	38.3	44.2	V	(1), Duty=100%, IPIN=100mA
LED Light Bar Current Per Input Pin	IPIN		100		mA	(1), (2) Duty=100%
LED Life Time	LLED	30000			Hrs	(3)
Power Consumption	PBL	-	61.3	70.7	W	(1) Duty=100%, IPIN=100mA

Note (1) LED light bar input voltage and current are measured by utilizing a true RMS multimeter as shown below:

Note (2) PBL = IPIN × VPIN × (16) input pins.

Note (3) The lifetime of LED is estimated data and defined as the time when LED packages continue to operate under the conditions at Ta = 25 ±2 ℃ and I= 125 mA (per chip) until the brightness becomes ≦ 50% of its original value. Operating LED under high temperature environment will reduce life time and lead to color shift.

Note (4) The module must be operated with constant driving current.

Note (5) If converter has PWM function, the PWM Frequency setting must be equal to 200Hz.

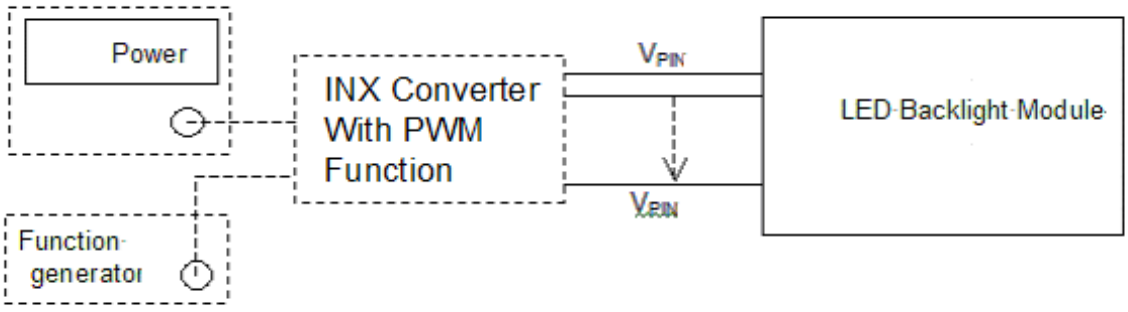

The copyright belongs to InnoLux. Any unauthorized use is prohibited.

4.3.4 CONVERTER ELECTRICAL CHARACTERISTICS

Parameter		Symbol	Value			Unit	Note
			Min.	Typ.	Max.		
(Converter input voltage)		V_i	21.6	24.0	26.4	V_{DC}	(Duty 100%)
(Converter input ripple voltage)		V_{iRP}	-	-	500	mV	
(Converter input current)		I_i	-	2.77	3.2	A_{DC}	@ Vi = 24V (Duty 100%)
(Converter inrush current)		I_{iRUSH}	-	-	5.0	A	@ Vi rising time=20ms (Vi=24V)
Input Power Consumption		P_i	-	66.5	76.8	W	(1)
EN Control Level	Backlight on	ENLED (BLON)	2.5	3.3	5.0	V	
	Backlight off		0	-	0.3	V	
PWM Control Level	PWM High Level	Dimming (E_PWM)	2.5	-	5.0	V	
	PWM Low Level		0	-	0.15	V	
PWM Noise Range		V_{Noise}	-	-	0.1	V	
PWM Control Frequency		f_{PWM}	190	200	20K	Hz	(2)
PWM Control Duty Ratio		-	5	-	100	%	(2),@190Hz<f_{PWM}<1kHz
			20	-	100	%	(2),@1kHz≦f_{PWM}<20kHz

Note (1)LED current is measured by utilizing a high frequency current meter as shown below:

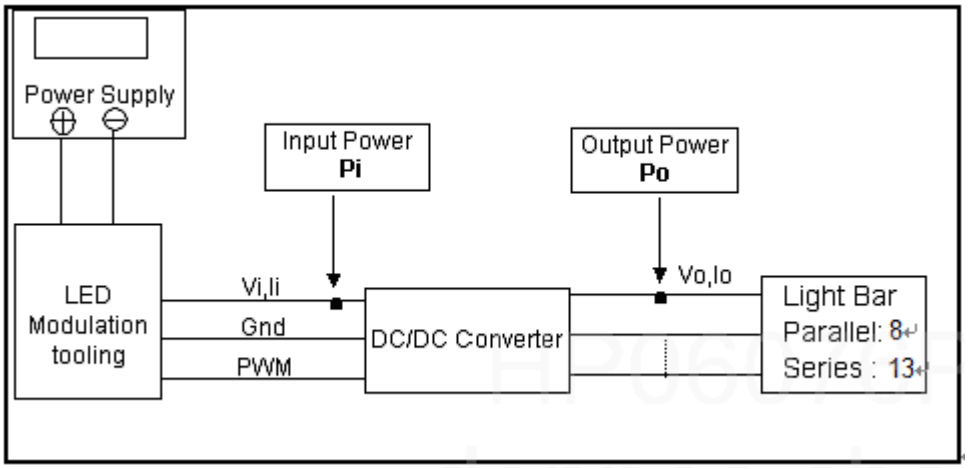

Note (2) At 190 ~1kHz PWM control frequency, duty ratio range is restricted from 5% to 100%. 1K ~20kHz PWM control frequency, duty ratio range is restricted from 20% to 100%.

If PWM control frequency is applied in the range from 1KHz to 20KHZ, The “non-linear” phenomenon on the Backlight Unit may be found. So It’s a suggestion that PWM control frequency should be less than 1KHz.

The copyright belongs to InnoLux. Any unauthorized use is prohibited.

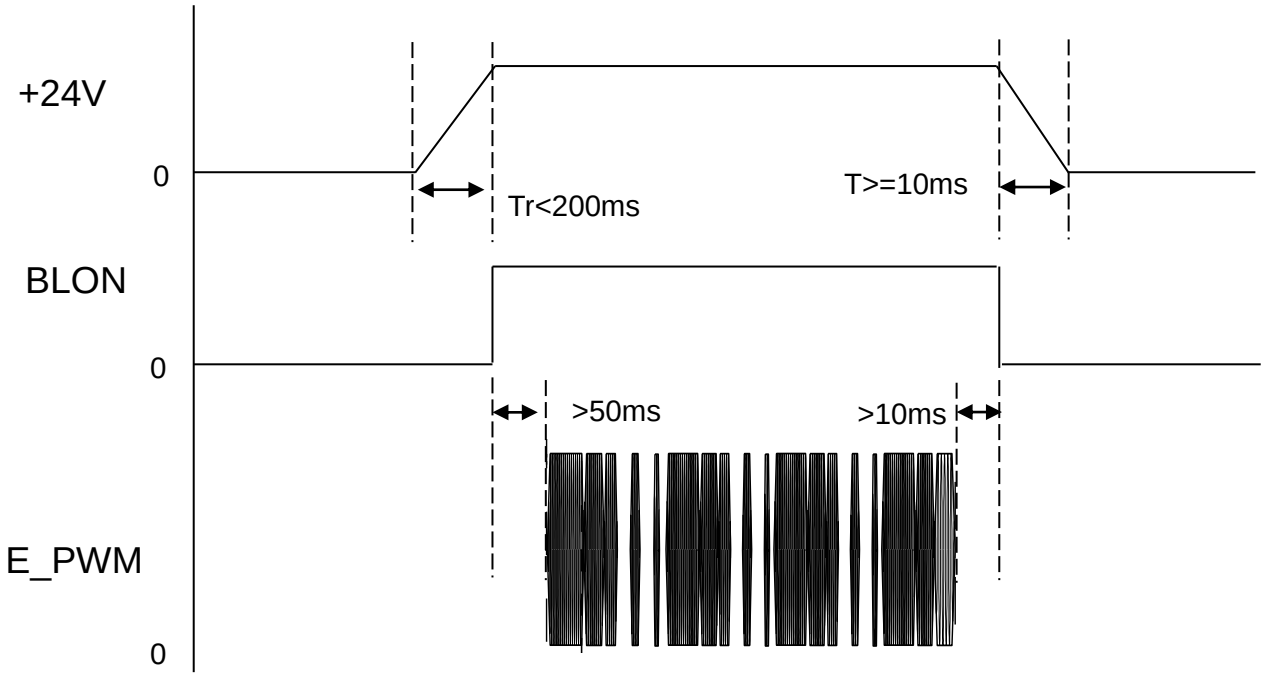

Note： While system is turned ON or OFF, the power sequences must follow as below descriptions

Turn ON sequence: Vi(+24V) → BLON → E_PWM signal

Turn OFF sequence: E_PWM signal → BLON → Vi(+24V)

The definition of T_r : the time period of 10%*V_i to 90%*V_i

The definition of T_f : the time period of 90%*V_i to 10%*V_i

The copyright belongs to InnoLux. Any unauthorized use is prohibited.

The following chart is the BLU Dimming for your reference.

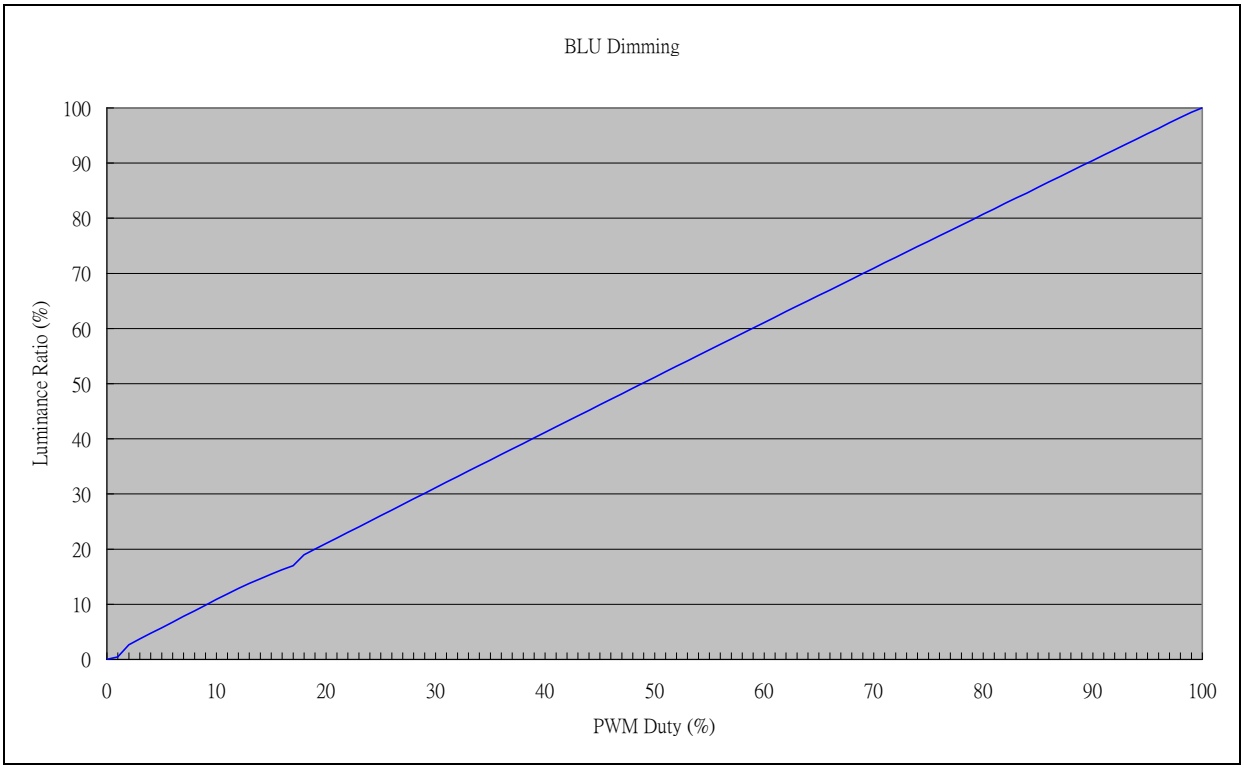

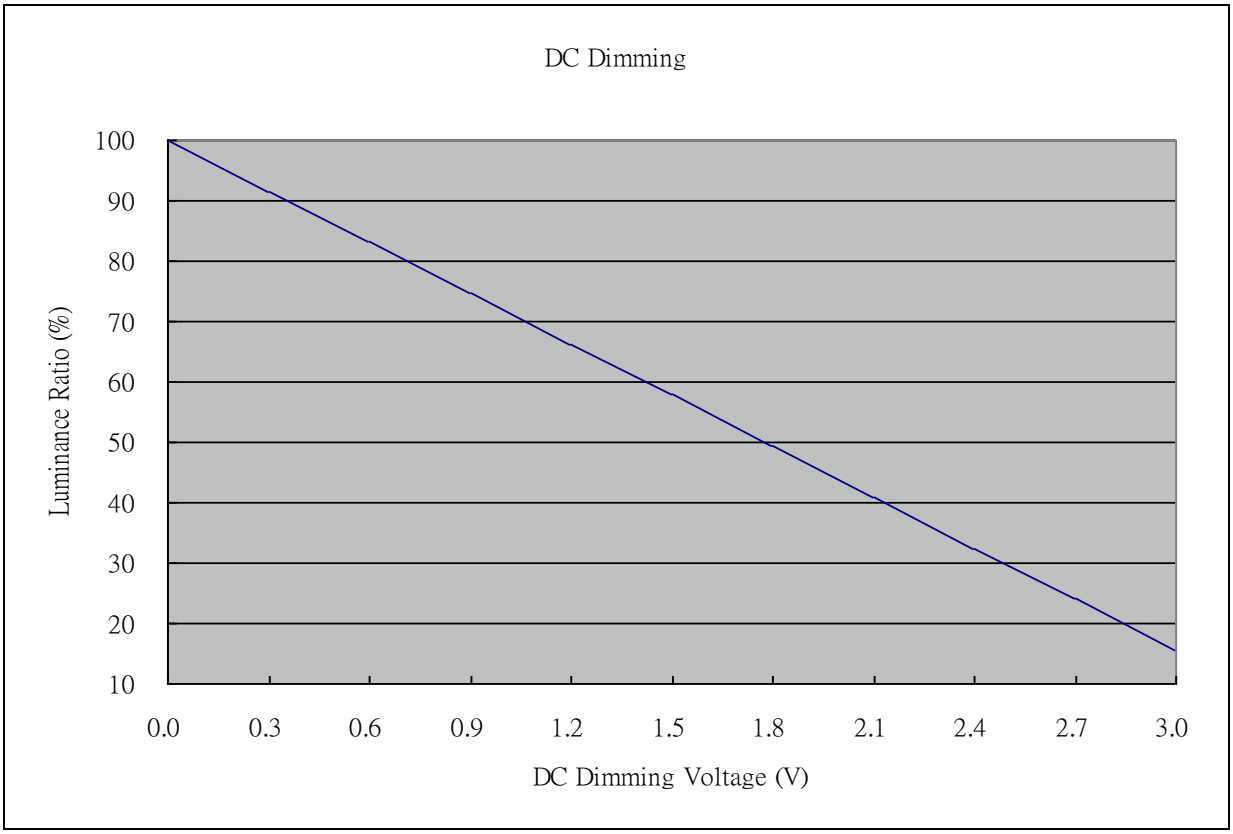

The copyright belongs to InnoLux. Any unauthorized use is prohibited.

4.3.5 CONVERTER INPUT CONNECTOR PIN ASSIGNMENT

Connector: FCN JH2-D4-143N or equivalent

Pin №	Signal name	Feature
1	V_{BL}	+24 V
2		
3		
4		
5		
6	GND	GND
7		
8		
9		
10		
11	DC_Dimming	DC Dimming (Hi: $3V_{DC}$, Lo: $0V_{DC}$)
12	BLON	BL ON/OFF (ON:3.3V, OFF:0V)
13	SEL	DC_Dimming : Hi 3.3V; PWM_Dimming : Lo 0V
14	E_PWM	External PWM Control (Hi Level: 3.3V, Lo Level: 0V)

4.4 V BY ONE INPUT SIGNAL SPECIFICATIONS

4.4.1 V BY ONE DATA MAPPING TABLE

Lan	Data Stream
Lan 0	1, 9, 17, ..., 3825, 3833
Lan 1	2, 10, 18, ..., 3826, 3834
Lan 2	3, 11, 19, ..., 3827, 3835
Lan 3	4, 12, 20, ..., 3828, 3836
Lan 4	5, 13, 21, ..., 3829, 3837
Lan 5	6, 14, 22, ..., 3830, 3838
Lan 6	7, 15, 23, ..., 3831, 3839
Lan 7	8, 16, 24, ..., 3832, 3840

The copyright belongs to InnoLux. Any unauthorized use is prohibited.

4.4.2 COLOR DATA INPUT ASSIGNMENT

The brightness of each primary color (red, green and blue) is based on the 10-bit gray scale data input for the color. The higher the binary input, the brighter the color. The table below provides the assignment of color versus data input.

Color		Data Signal																													
		Red										Green										BLUE									
		R9	R8	G7	G6	R5	R4	R3	R2	R1	R0	G9	G8	G7	G6	G5	G4	G3	G2	G1	G0	B9	B8	B7	B6	B5	B4	B3	B2	B1	B0
Basic Colors	Black	0	0	0	0	0	0	0	0	0	0	0	0	0	0	0	0	0	0	0	0	0	0	0	0	0	0	0	0	0	0
	Red	1	1	1	1	1	1	1	1	1	1	0	0	0	0	0	0	0	0	0	0	0	0	0	0	0	0	0	0	0	0
	Green	0	0	0	0	0	0	0	0	0	0	1	1	1	1	1	1	1	1	1	1	0	0	0	0	0	0	0	0	0	0
	Blue	0	0	0	0	0	0	0	0	0	0	0	0	0	0	0	0	0	0	0	0	1	1	1	1	1	1	1	1	1	1
	Cyan	0	0	0	0	0	0	0	0	0	0	1	1	1	1	1	1	1	1	1	1	1	1	1	1	1	1	1	1	1	1
	Magenta	1	1	1	1	1	1	1	1	1	1	0	0	0	0	0	0	0	0	0	0	1	1	1	1	1	1	1	1	1	1
	Yellow	1	1	1	1	1	1	1	1	1	1	1	1	1	1	1	1	1	1	1	1	0	0	0	0	0	0	0	0	0	0
	White	1	1	1	1	1	1	1	1	1	1	1	1	1	1	1	1	1	1	1	1	1	1	1	1	1	1	1	1	1	1
Gray Scale Of Red	Red(0) / Dark	0	0	0	0	0	0	0	0	0	0	0	0	0	0	0	0	0	0	0	0	0	0	0	0	0	0	0	0	0	0
	Red(1)	0	0	0	0	0	0	0	0	1	0	0	0	0	0	0	0	0	0	0	0	0	0	0	0	0	0	0	0	0	0
	Red(2)	0	0	0	0	0	0	0	0	0	0	0	0	0	0	0	0	0	0	0	0	0	0	0	0	0	0	0	0	0	0
	:			:	:	:	:	:	:	:	:	:	:	:	:	:	:	:	:	:	:	:	:	:	:	:	:	:	:	:	:
	:			:	:	:	:	:	:	:	:	:	:	:	:	:	:	:	:	:	:	:	:	:	:	:	:	:	:	:	:
	Red(1021)	1	1	1	1	1	1	1	1	0	1	0	0	0	0	0	0	0	0	0	0	0	0	0	0	0	0	0	0	0	0
	Red(1022)	1	1	1	1	1	1	1	1	1	0	0	0	0	0	0	0	0	0	0	0	0	0	0	0	0	0	0	0	0	0
	Red(1023)	1	1	1	1	1	1	1	1	1	1	0	0	0	0	0	0	0	0	0	0	0	0	0	0	0	0	0	0	0	0
Gray Scale Of Green	Green(0) / Dark	0	0	0	0	0	0	0	0	0	0	0	0	0	0	0	0	0	0	0	0	0	0	0	0	0	0	0	0	0	0
	Green(1)	0	0	0	0	0	0	0	0	0	0	0	0	0	0	0	0	0	0	1	0	0	0	0	0	0	0	0	0	0	0
	Green(2)	0	0	0	0	0	0	0	0	0	0	0	0	0	0	0	0	0	1	0	0	0	0	0	0	0	0	0	0	0	0
	:	:	:	:	:	:	:	:	:	:	:	:	:	:	:	:	:	:	:	:	:	:	:	:	:	:	:	:	:	:	:
	:	:	:	:	:	:	:	:	:	:	:	:	:	:	:	:	:	:	:	:	:	:	:	:	:	:	:	:	:	:	:
	Green(1021)	0	0	0	0	0	0	0	0	0	0	1	1	1	1	1	1	1	1	0	1	0	0	0	0	0	0	0	0	0	0
	Green(1022)	0	0	0	0	0	0	0	0	0	0	1	1	1	1	1	1	1	1	1	0	0	0	0	0	0	0	0	0	0	0
	Green(1023)	0	0	0	0	0	0	0	0	0	0	1	1	1	1	1	1	1	1	1	1	0	0	0	0	0	0	0	0	0	0
Gray Scale Of Blue	Blue(0) / Dark	0	0	0	0	0	0	0	0	0	0	0	0	0	0	0	0	0	0	0	0	0	0	0	0	0	0	0	0	0	0
	Blue(1)	0	0	0	0	0	0	0	0	0	0	0	0	0	0	0	0	0	0	0	0	0	0	0	0	0	0	0	0	0	1
	Blue(2)	0	0	0	0	0	0	0	0	0	0	0	0	0	0	0	0	0	0	0	0	0	0	0	0	0	0	0	0	1	0
	:	:	:	:	:	:	:	:	:	:	:	:	:	:	:	:	:	:	:	:	:	:	:	:	:	:	:	:	:	:	:
	:	:	:	:	:	:	:	:	:	:	:	:	:	:	:	:	:	:	:	:	:	:	:	:	:	:	:	:	:	:	:
	Blue(1021)	0	0	0	0	0	0	0	0	0	0	0	0	0	0	0	0	0	0	0	0	1	1	1	1	1	1	1	1	0	1
	Blue(1022)	0	0	0	0	0	0	0	0	0	0	0	0	0	0	0	0	0	0	0	0	1	1	1	1	1	1	1	1	1	0
	Blue(1023)	0	0	0	0	0	0	0	0	0	0	0	0	0	0	0	0	0	0	0	0	1	1	1	1	1	1	1	1	1	1

Note (1) 0: Low Level Voltage, 1: High Level Voltage

The copyright belongs to InnoLux. Any unauthorized use is prohibited.

4.5 DISPLAY TIMING SPECIFICATIONS

The input signal timing specifications are shown as the following table and timing diagram.

Signal	Item	Symbol	Min.	Typ.	Max.	Unit	Note
V by One	Frequency	Fc	56	74.25	80	MHz	(1)
	Intra-Pair skew		-0.3	-	0.3	UI	(2)
	Inter-Pair skew		-5	-	5	UI	(3)
	Spread spectrum modulation range	Fclkin_mod	F_{clkin}-0.5%	-	F_{clkin}+0.5%	MHz	(4)
	Spread spectrum modulation frequency	F_{SSM}	-	-	30	KHz	
Vertical Display Term	Frame Rate	Fr	47	60	62.5	Hz	(5)(6)
	Total	Tv	2200	2250	2480	Th	Tv=Tvd+Tvb (7)
	Active Display	Tvd	2160	2160	2160	Th	-
	Blank	Tvb	40	90	320	Th	-
Horizontal Display Term	Total	Th	530	550	570	Tc	Th=Thd+Thb
	Active Display	Thd	480	480	480	Tc	-
	Blank	Thb	50	70	90	Tc	-

Note (1) Please make sure the range of pixel clock has follow the below equation:

Fclkin(max) ≧ Fr × Tv × Th

Fr × Tv × Th ≧ Fclkin (min)

INPUT SIGNAL TIMING DIAGRAM

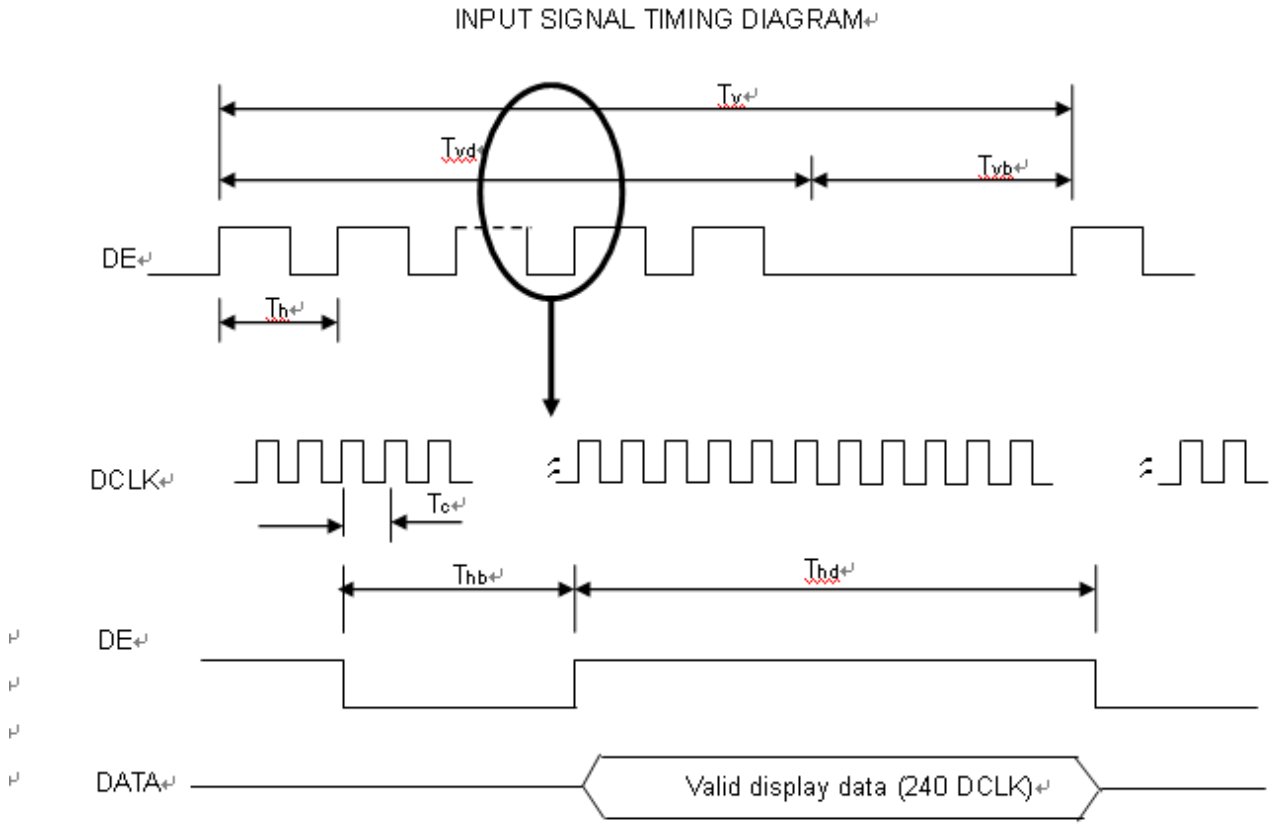

The copyright belongs to InnoLux. Any unauthorized use is prohibited.

Note (2) V-by-One HS Intra-pair skew

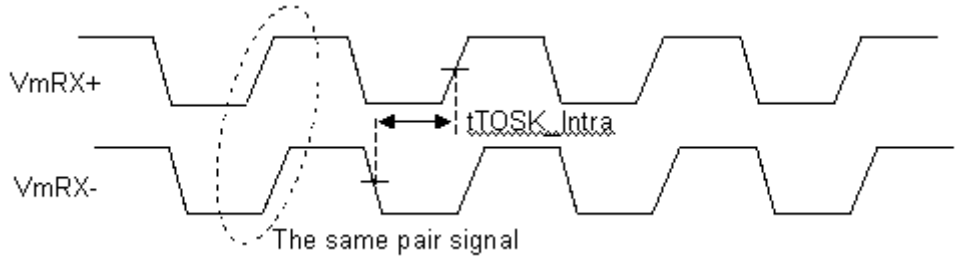

Note (3) V-by-One HS Inter-pair skew

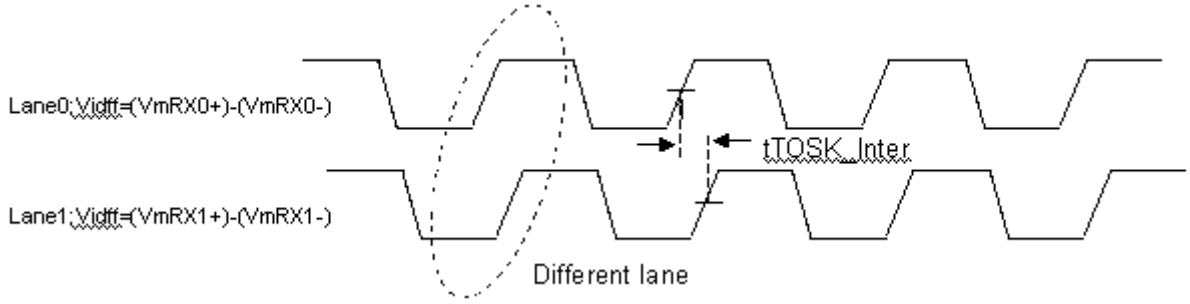

Note (4) The SSCG (Spread spectrum clock generator) is defined as below figures.

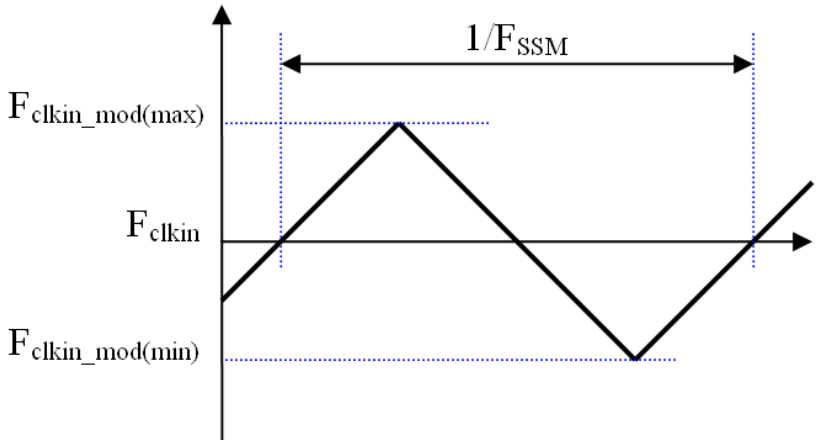

Note (5) The frame-to-frame jitter of the input frame rate is defined as the above figures. FRn = FRn-1 ± 0.5%.

Note (6) The setup of the frame rate jitter > 0.5% may result in the cosmetic LED backlight symptom and the electric function is affected.

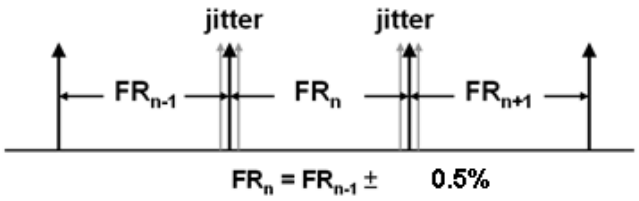

Note (7) The Tv(Tvd+Tvb) must be integer, otherwise, this module would operate abnormally.

The copyright belongs to InnoLux. Any unauthorized use is prohibited.

4.6 V BY ONE INPUT SIGNAL TIMING DIAGRAM

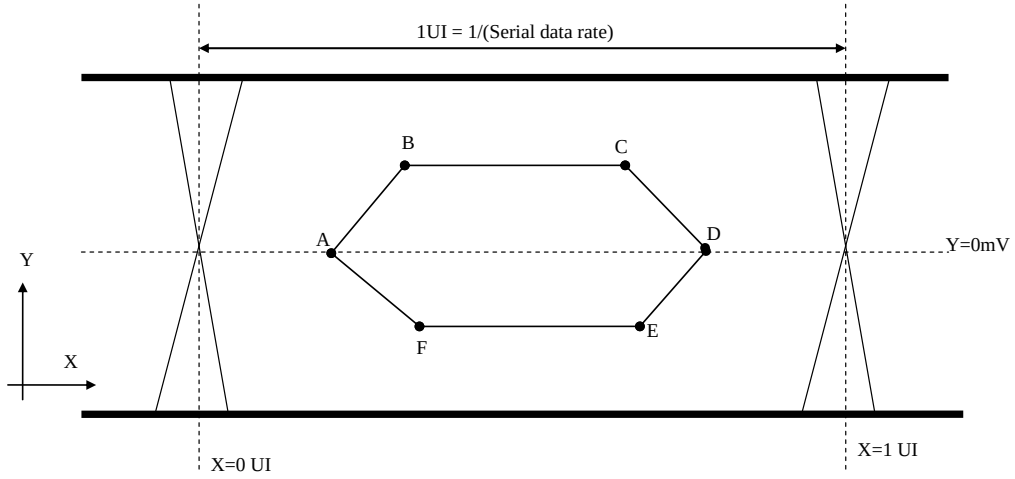

Table 1 Eye Mask Specification

	X [UI]	Y [mV]	Note
A	0.25	0	(1)
B	0.3	50	(1)
C	0.7	50	(1)
D	0.75	0	(1)
E	0.7	-50	(1)
F	0.3	-50	(1)

Note (1) Input levels of V-by-One HS signals are comes from “V-by-One HS Stander Ver.1.4”

The copyright belongs to InnoLux. Any unauthorized use is prohibited.

4.7 BYTE LENGTH AND COLOR MAPPING OF V-BY-ONE HS

Packer input & Unpacker output		30bpp RGB (10bit)
Byte 0	D[0]	R[2]
	D[1]	R[3]
	D[2]	R[4]
	D[3]	R[5]
	D[4]	R[6]
	D[5]	R[7]
	D[6]	R[8]
	D[7]	R[9]
Byte 1	D[8]	G[2]
	D[9]	G[3]
	D[10]	G[4]
	D[11]	G[5]
	D[12]	G[6]
	D[13]	G[7]
	D[14]	G[8]
	D[15]	G[9]
Byte 2	D[16]	B[2]
	D[17]	B[3]
	D[18]	B[4]
	D[19]	B[5]
	D[20]	B[6]
	D[21]	B[7]
	D[22]	B[8]
	D[23]	B[9]
Byte 3	D[24]	X
	D[25]	X
	D[26]	B[0]
	D[27]	B[1]
	D[28]	G[0]
	D[29]	G[1]
	D[30]	R[0]
	D[31]	R[1]

The copyright belongs to InnoLux. Any unauthorized use is prohibited.

4.8 POWER ON/OFF SEQUENCE

(Ta = 25 ± 2 ºC)

To prevent a latch-up or DC operation of LCD module, the power on/off sequence should be as the diagram below.

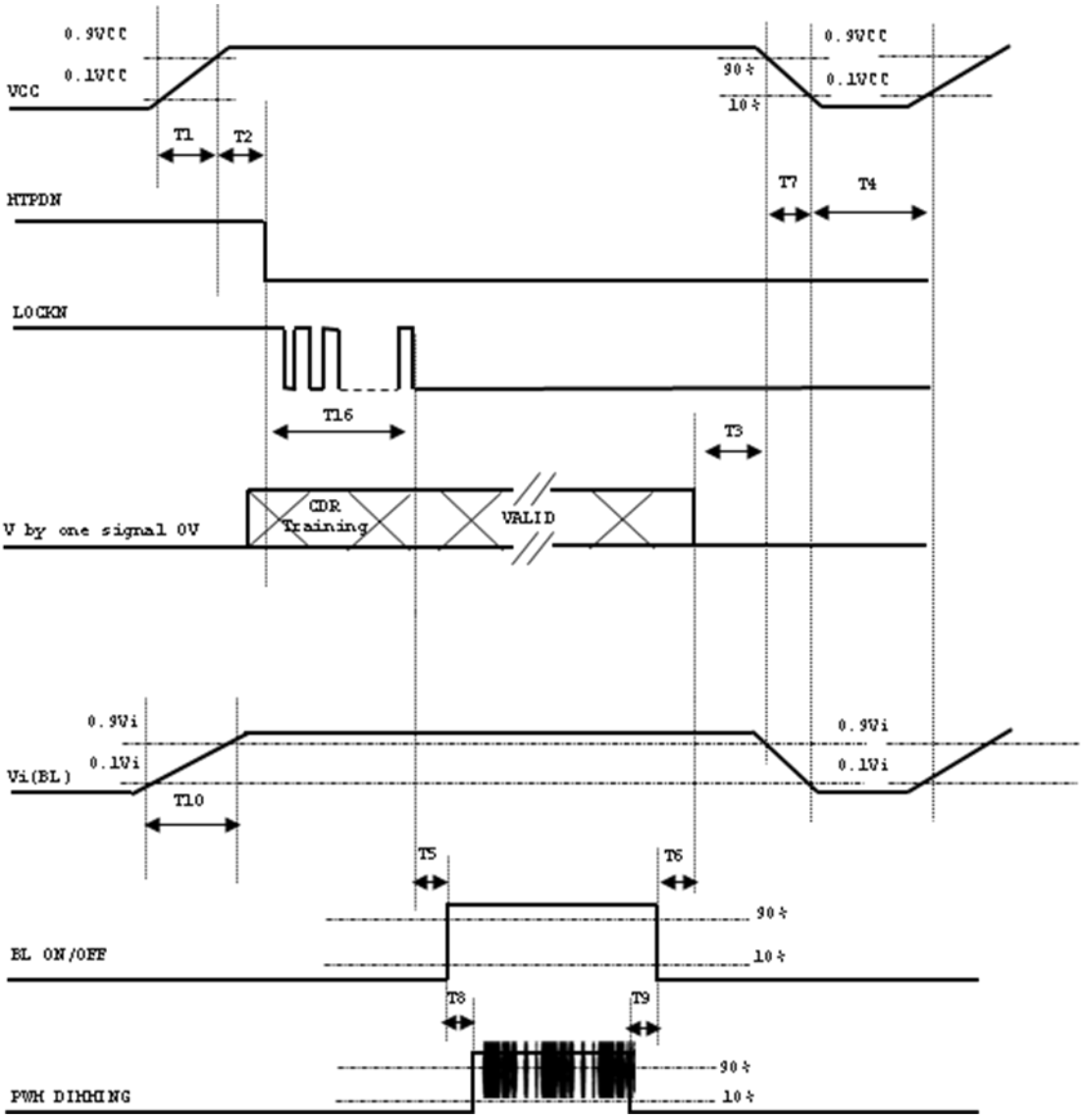

The copyright belongs to InnoLux. Any unauthorized use is prohibited.

Parameter	Value			Units
	Min	Typ	Max	
T1	0.5	-	10	ms
T2	0	-	-	ms
T3	0	-	-	ms
T4	500	-	-	ms
T5	450	-	-	ms
T6	200	-	-	ms
T7	10	-	100	ms
T8	10	-	-	ms
T9	10	-	-	ms
T10	20	-	50	ms
T16	10	-	-	ms

Note (1) The supply voltage of the external system for the module input should follow the definition of Vcc.

Note (2) Apply the LED voltage within the LCD operation range. When the backlight turns on before the LCD operation or the LCD turns off before the backlight turns off, the display may momentarily become abnormal screen..

Note (3) In case of Vcc is in off level, please keep the level of input signals on the low or high impedance. If T2<0, that maybe cause electrical overstress failure.

Note (4) T4 should be measured after the module has been fully discharged between power off and on period..

Note (5) Interface signal shall not be kept at high impedance when the power is on

Note (6) Vcc must decay smoothly when power-off

The copyright belongs to InnoLux. Any unauthorized use is prohibited.

5. OPTICAL CHARACTERISTICS

5.1 TEST CONDITIONS

Item	Symbol	Value	Unit
Ambient Temperature	Ta	25±2	oC
Ambient Humidity	Ha	50±10	%RH
Supply Voltage	According to typical value and tolerance in "ELECTRICAL CHARACTERISTICS"		
Input Signal			
LED Light Bar Input Current Per Input Pin			
PWM Duty Ratio	D	100	%
LED Light Bar Test Converter			

5.2 OPTICAL SPECIFICATIONS

The relative measurement methods of optical characteristics are shown here and all items are measured at the center point of screen unless otherwise noted. The following items should be measured under the test conditions described above and stable conditions shown in Note (5).

TItem		Symbol	Condition	Min.	Typ.	Max.	Unit	Note
-Color Chromaticity (CIE 1931)	Red	Rx	θ_x=0°, θ_Y =0° CS-2000 R=G=B=255 Gray scale	Typ – 0.03	0.685	Typ + 0.03	-	(1), (5)
		Ry			0.312			
	Green	Gx			0.238			
		Gy			0.705			
	Blue	Bx			0.153			
		By			0.038			
	White	Wx			0.313			
		Wy			0.329			
Center Luminance of White (Center of Screen)		L_C		680	850	-	cd/m^2	(4), (5)
Contrast Ratio		CR		1600	2000	-	-	(2), (5)
Response Time		T_{R+} T_F	θ_x=0°, θ_Y =0°	-	16	-	ms	(3)
White Variation		W	θ_x=0°, θ_Y =0°	--	-	1.33	--	(5), (6)
Viewing Angle	Horizontal	θx- + θx+	CR ≧ 10	160	178	-	Deg.	(1), (5)
	Vertical	θy- + θy+		160	178	-		

Definition：

Grayscale Maximum : Grayscale 255 (10 bits: grayscale 1023 ; 8 bits : grayscale 255 ; 6 bits: grayscale 63)

White : Luminance of Grayscale Maximum (All R,G,B)

Black : Luminance of grayscale 0 (All R,G,B)

The copyright belongs to InnoLux. Any unauthorized use is prohibited.

Note (1) Definition of Viewing Angle (θx, θy):

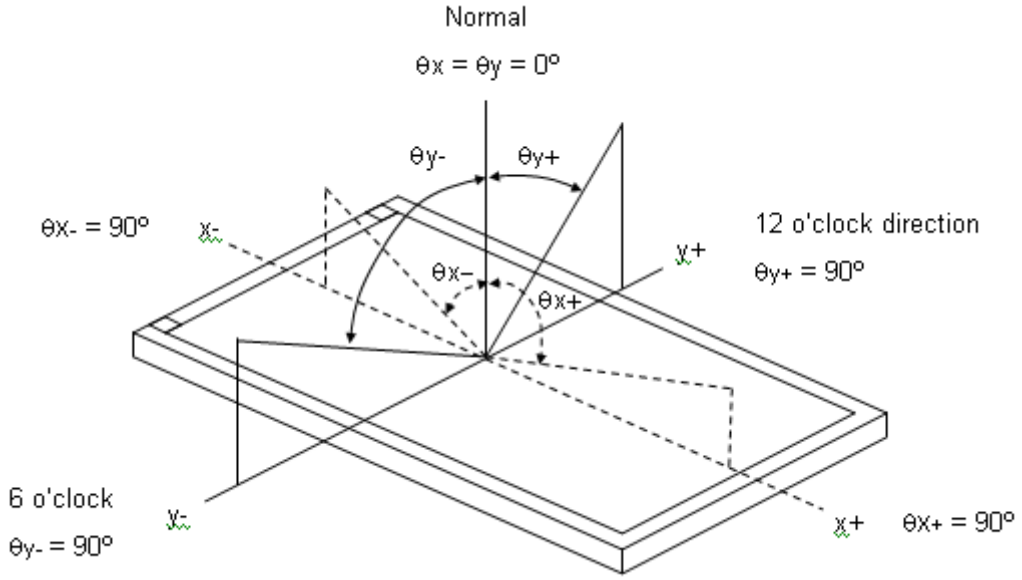

Note (2) Definition of Contrast Ratio (CR):

The contrast ratio can be calculated by the following expression at center point.

Contrast Ratio (CR) = White / Black

Note (3)Definition of Response Time (T_{GTG_AVE}):

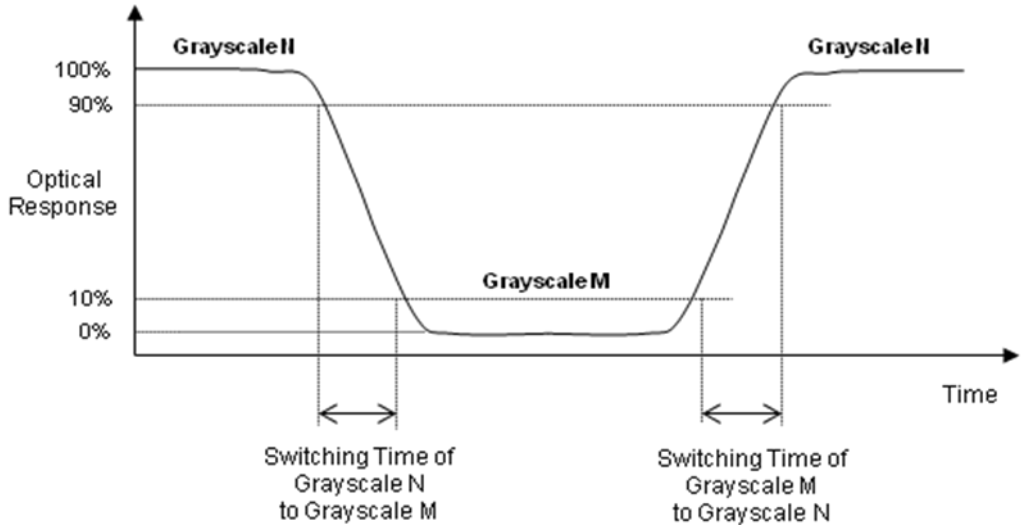

N, M (separately) : Grayscale 0, 31, 63, 95, 127, 159, 191, 223 and 255 (8 bits), 9 levels.

T_{GTG_AVE} : The total average of the T_{GTG} data which is switching time of grayscale N to M, 9x9 matrix except the same grayscales. It's measured by Innolux GTG instrument.

Note (4) Definition of Luminance of White (L_C):

Measure the luminance of White at center point

Note (5) Measurement Setup:

The copyright belongs to InnoLux. Any unauthorized use is prohibited.

The LCD module should be stabilized at given temperature to avoid abrupt temperature change during measuring. In order to stabilize the luminance, the measurement should be executed after lighting Backlight for 60 minutes in a windless room.

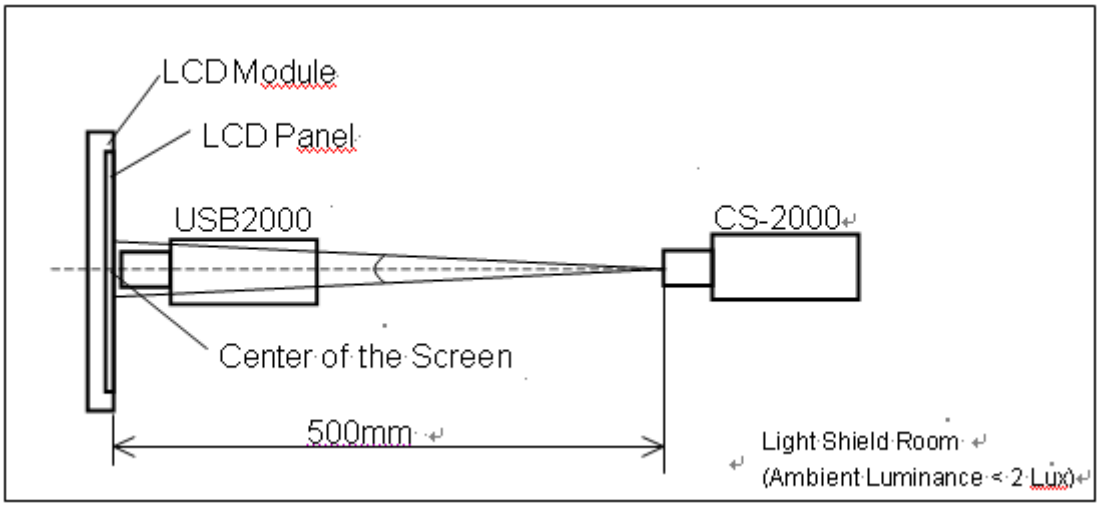

Note (6) Definition of White Variation (δW):

Measure the luminance of White at 9 points.

Luminance of White : L(X) , where X is from 1 to 9.

$$\delta W = \frac{\text{Maximum}[L(1),L(2),L(3),L(4),L(5),L(6),L(7),L(8),L(9)]}{\text{Minimum}[L(1),L(2),L(3),L(4),L(5),L(6),L(7),L(8),L(9)]}$$

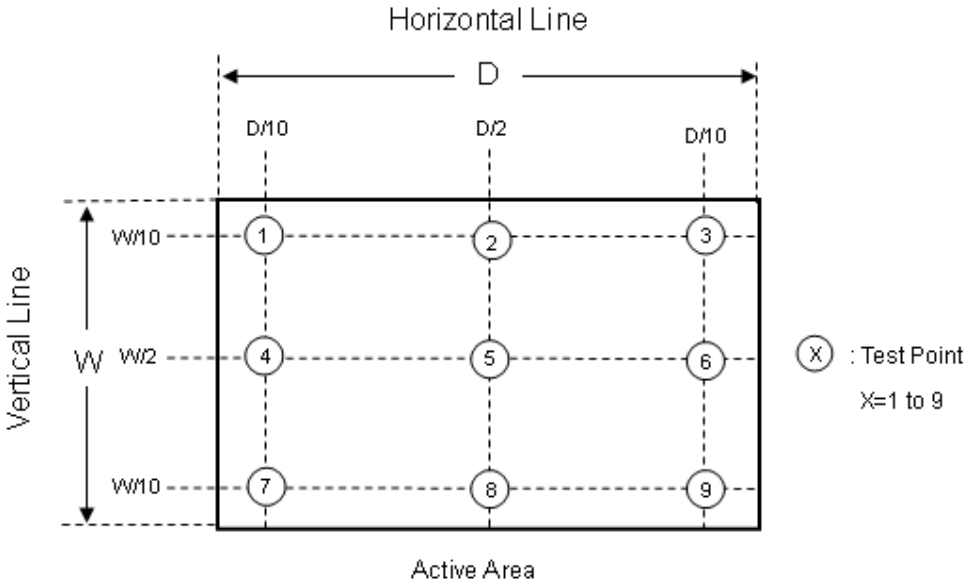

The copyright belongs to InnoLux. Any unauthorized use is prohibited.

6. RELIABILITY TEST ITEM

Items	Required Condition	Note
Temperature Humidity Bias (THB)	Ta= 50℃ , 80%RH, 240hours	(1)(2)
High Temperature Operation (HTO)	Ta= 50℃ , 240hours	(1)(2)
Low Temperature Operation (LTO)	Ta= 0℃ , 240hours	(1)(2)
High Temperature Storage (HTS)	Ta= 60℃ , 240hours	(1)(2)
Low Temperature Storage (LTS)	Ta= -20℃ , 240hours	(1)(2)
Vibration Test (Non-operation)	Acceleration: 1.5 G Wave: sine Frequency: 10 - 300 Hz Sweep: 30 Minutes each Axis (X, Y, Z)	(3)
Shock Test (Non-operation)	Acceleration: 50 G Wave: Half-sine Active Time: 11 ms Direction : ± X, ± Y, ± Z.(one time for each Axis)	(3)
Thermal Shock Test (TST)	-20℃/30min , 60℃ / 30min , 100 cycles	(1)(2)
On/Off Test	25℃ ,On/10sec , Off /10sec , 30,000 cycles	(1)
ESD (Electro Static Discharge)	Contact Discharge: ± 8KV, 150pF(330Ω)	(1)
	Air Discharge: ± 15KV, 150pF(330Ω)	(1)
Altitude Test	Operation:10,000 ft / 24hours Non-Operation:30,000 ft / 24hours	(1)(2)

Note (1) criteria : Normal display image with no obvious non-uniformity and no line defect.

Note (2) Evaluation should be tested after storage at room temperature for more than two hour

Note (3) At testing Vibration and Shock, the fixture in holding the module has to be hard and rigid enough so that the module would not be twisted or bent by the fixture.

The fixing condition is shown as below:

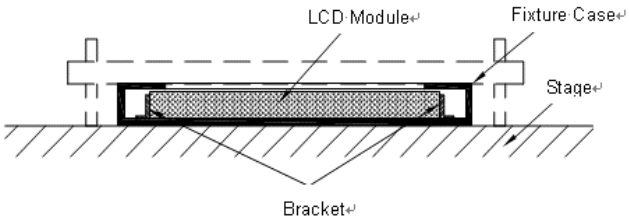

The copyright belongs to InnoLux. Any unauthorized use is prohibited.

7. PACKING

7.1 PACKING SPECIFICATIONS

(1) 5 LCD modules / 1 Box

(2) Box dimensions: 835(L) X 285(W) X 540(H) mm

(3) Weight: approximately: 24.78kg (typ.) (5 modules per box)

7.2 PACKING METHOD

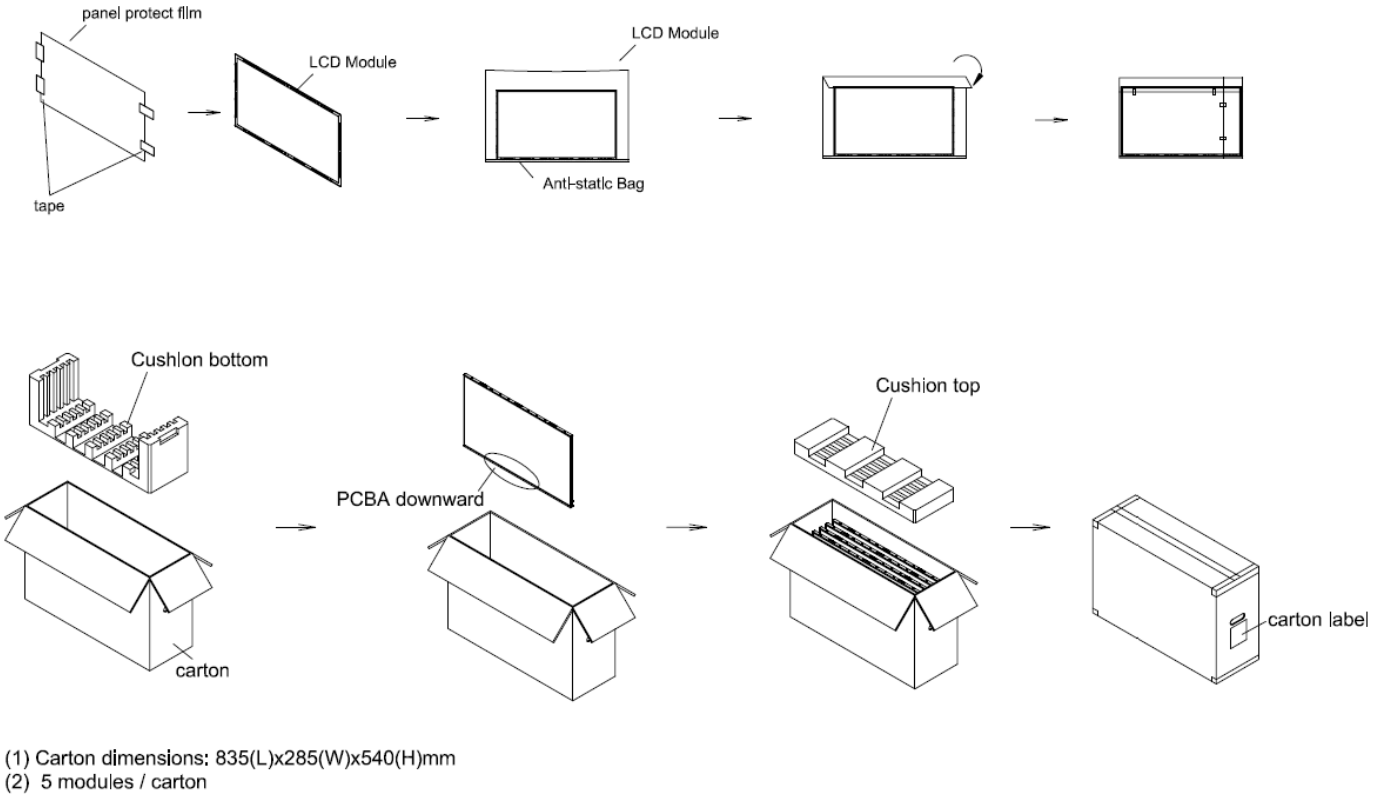

(1) Carton dimensions: 835(L)x285(W)x540(H)mm
(2) 5 modules / carton

Figure. 7-1 Packing method

The copyright belongs to InnoLux. Any unauthorized use is prohibited.

7.3 PALLET

For ocean shipping

Air Transportation
2 Layer

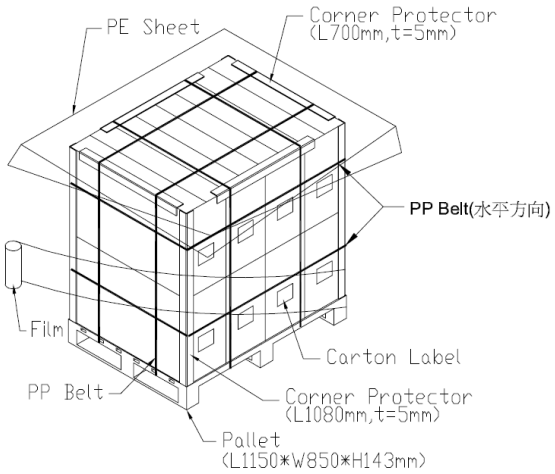

Sea / Land Transportation (40ft Container)
3 Layer

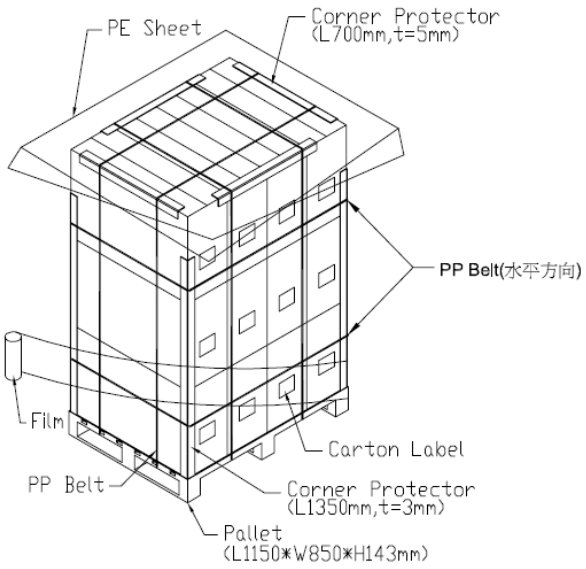

Sea / Land Transportation (40ft HQ Container)
2+2 Layer

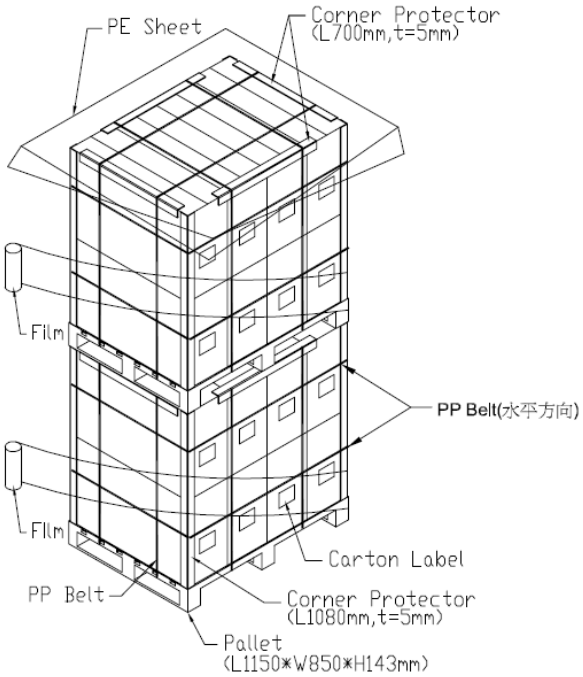

Figure. 7-2 Packing method

The copyright belongs to InnoLux. Any unauthorized use is prohibited.

7.4 UN-PACKING METHOD

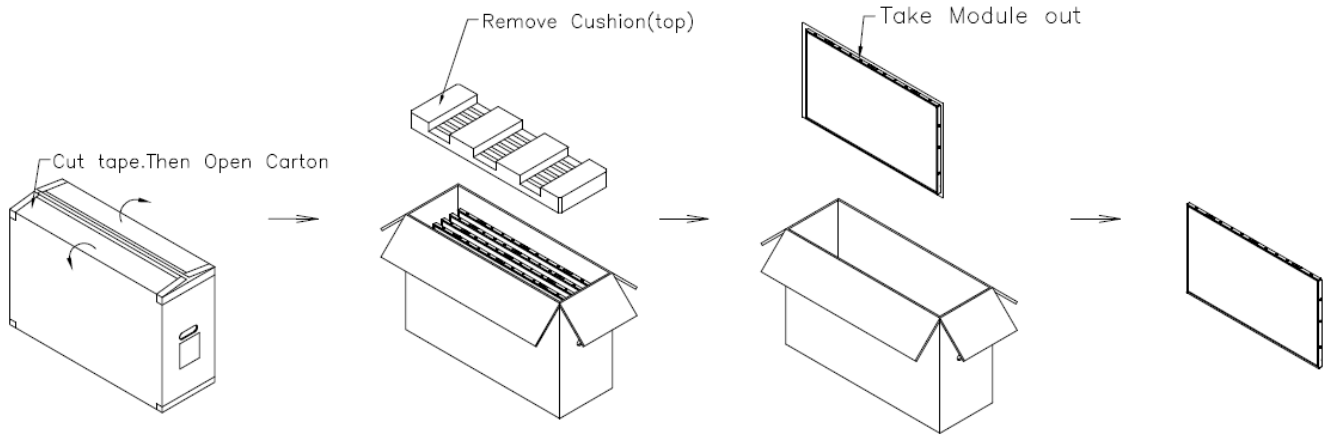

Figure. 7-3 UN-Packing method

The copyright belongs to InnoLux. Any unauthorized use is prohibited.

8. INX MODULE LABEL

The barcode nameplate is pasted on each module as illustration, and its definitions are as following explanation.



(a) Model Name: R315DCJ-KS4

(b) Revision: Rev. XX, for example: A0, A1… B1, B2… or C1, C2…etc.

(c) InnoLux barcode definition:

Serial ID: XX-XX-X-XX-YMD-L-NNNN

Code	Meaning	Description
XX	InnoLux internal use	-
XX	Revision	Cover all the change
X	InnoLux internal use	-
XX	InnoLux internal use	-
YMD	Year, month, day	Year: 0~9, 2001=1, 2002=2, 2003=3…2010=0, 2011=1, 2012=2… Month: 1~12=1, 2, 3, ~, 9, A, B, C Day: 1~31=1, 2, 3, ~, 9, A, B, C, ~, W, X, Y, exclude I, O, and U.
L	Product line #	Line 1=1, Line 2=2, Line 3=3, …
NNNN	Serial number	Manufacturing sequence of product

(d) FAB ID(UL Factory ID):

Region	Factory ID
TWINX	GEMN
NBCMI	LEOO
NBCMI	VIRO
NBCME	CANO
NHCMI	CAPG

The copyright belongs to InnoLux. Any unauthorized use is prohibited.

9. PRECAUTIONS

9.1 ASSEMBLY AND HANDLING PRECAUTIONS

(1) There should be no condensation on the surface of panel during test.

(2) In the standard conditions, there is no function failure issue occurred. All the cosmetic Specification is judged before reliability test.

(3) Before cosmetic and function test, the product must have enough recovery time, at least 24 hours at room temperature.

(4) Be sure to turn off power supply when inserting or disconnecting from input connector.

(5) To avoid ESD(Electro Static Discharde) damage, be sure to ground yourself before handing TFT-LCD Module.

(6) Do not apply rough force such as bending or twisting to the module during assembly. TFT-LCD Module is not allowed to be twisted & bent even force is added on module in a very short time.

(7) To assemble or install module into user's system can be only in clean working areas. The dust and oil may cause electrical short or worsen the polarizer.

(8) It's not permitted to have pressure or impulse on the module because the LCD panel and Backlight will be damaged.

(9) Always follow the correct power sequence when LCD module is connecting and operating. This can prevent damage to the CMOS LSI chips during latch-up.

(10) Do not pull the I/F connector in or out while the module is operating.

(11) Do not disassemble or modify the module.

(12) Use a soft dry cloth without chemicals for cleaning, because the surface of polarizer is very soft and easily scratched.

(13) It is dangerous that moisture come into or contacted the LCD module, because moisture may damage LCD module when it is operating.

(14) High temperature or humidity may reduce the performance of module. Please store LCD module within the specified storage conditions.

(15) When ambient temperature is lower than 10ºC may reduce the display quality. For example, the response time will become slowly.

(16) While touching the panel surface under the patterns with higher grey levels, a shadow or mura phenomenon would be seen. This phenomenon is totally recoverable by switching the patterns to lower grey levels. It is a product featur

(17) Continuous displaying fixed pattern will induce image sticking. It's recommended to use screen saver or shuffle content periodically if fixed pattern is displayed on the screen.

9.2 STORAGE PRECAUTIONS

(1) Do not leave the module in high temperature, and high humidity for a long time. It is highly recommended to store the module with temperature from 0℃ to 35℃ and relative humidity of less than 70%

(2) Do not store the TFT – LCD module in direct sunlight

(3) The module should be stored in dark place. It is prohibited to apply sunlight or fluorescent light in storing

The copyright belongs to InnoLux. Any unauthorized use is prohibited.

9.3 OPERATION PRECAUTIONS

(1) The LCD product should be operated under normal condition.

Normal condition is defined as below :

Temperature : 20±15℃

Humidity: 65±20%

Display pattern : continually changing pattern(Not stationary)

(2) If the product will be used in extreme conditions such as high temperature, high humidity, high altitude ,display pattern or operation time etc…It is strongly recommended to contact INX for application engineering advice . Otherwise , Its reliability and function may not be guaranteed.

(3) Display pattern: regular switched patterns or moving pictures

Periodical power-off or screen saver is needed after long-term static display, moving picture or black pattern is strongly recommended for screen saver

(4) The ambient temperature near the operated module should be satisfied with the absolute maximum ratings. Sufficient cooling system should be adopted to system.

9.4 SAFETY PRECAUTIONS

(1) If the liquid crystal material leaks from the panel, it should be kept away from the eyes or mouth. In case of contact with hands, skin or clothes, it has to be washed away thoroughly with soap.

(2) After the module's end of life, it is not harmful in case of normal operation and storage.

9.5 SAFETY STANDARDS

The LCD module should be certified with safety regulations as follows:

Requirement	Standard	remark
UL	UL62368-1 or updated standard.	
CB	IEC62368-1 or updated standard.	

9.6 OTHER

When fixed patterns are displayed for a long time, remnant image is likely to occur.

The copyright belongs to InnoLux. Any unauthorized use is prohibited.

Appendix . OUTLINE DRAWING

The copyright belongs to InnoLux. Any unauthorized use is prohibited.

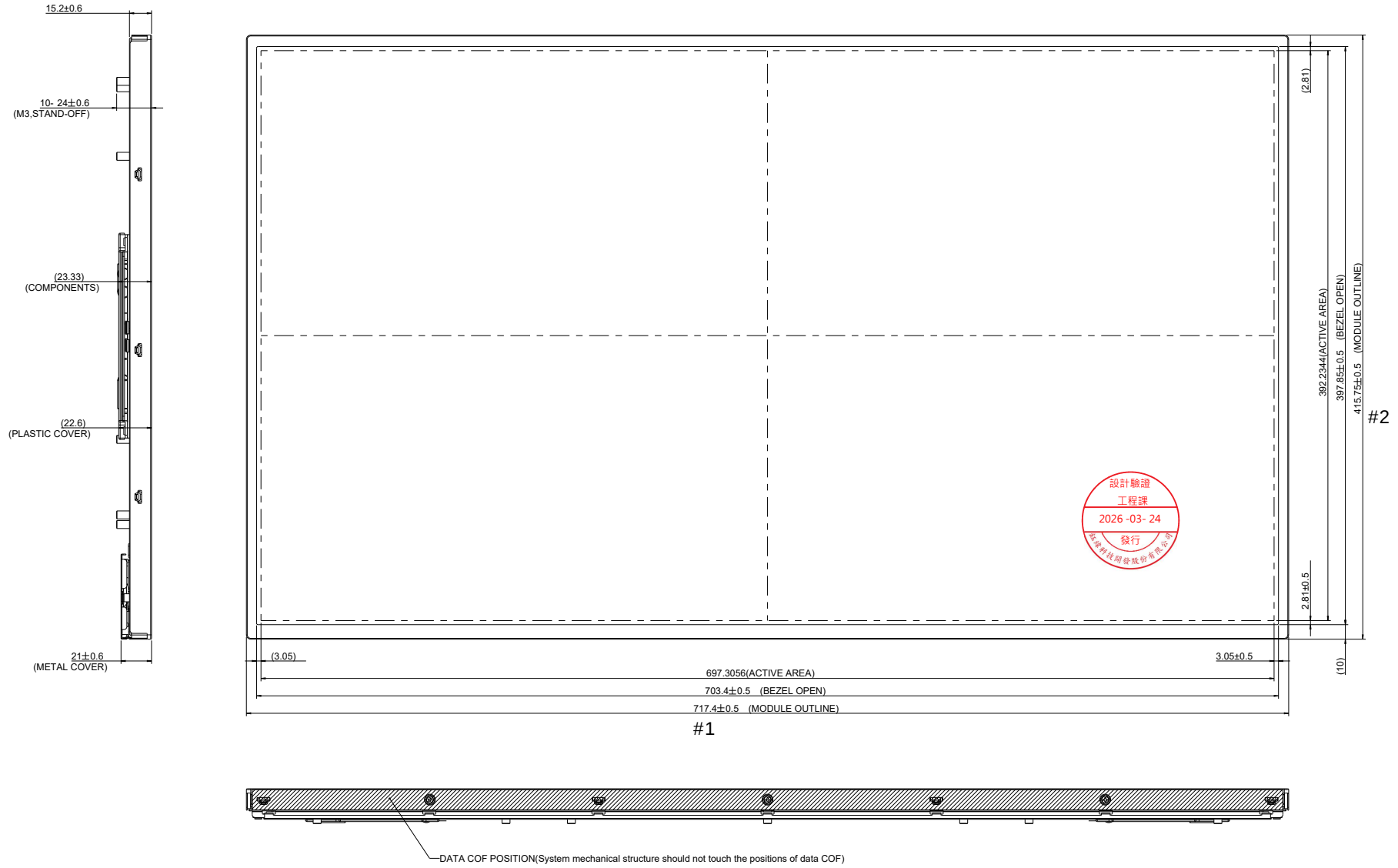

3TFTLCD316A (T0187)

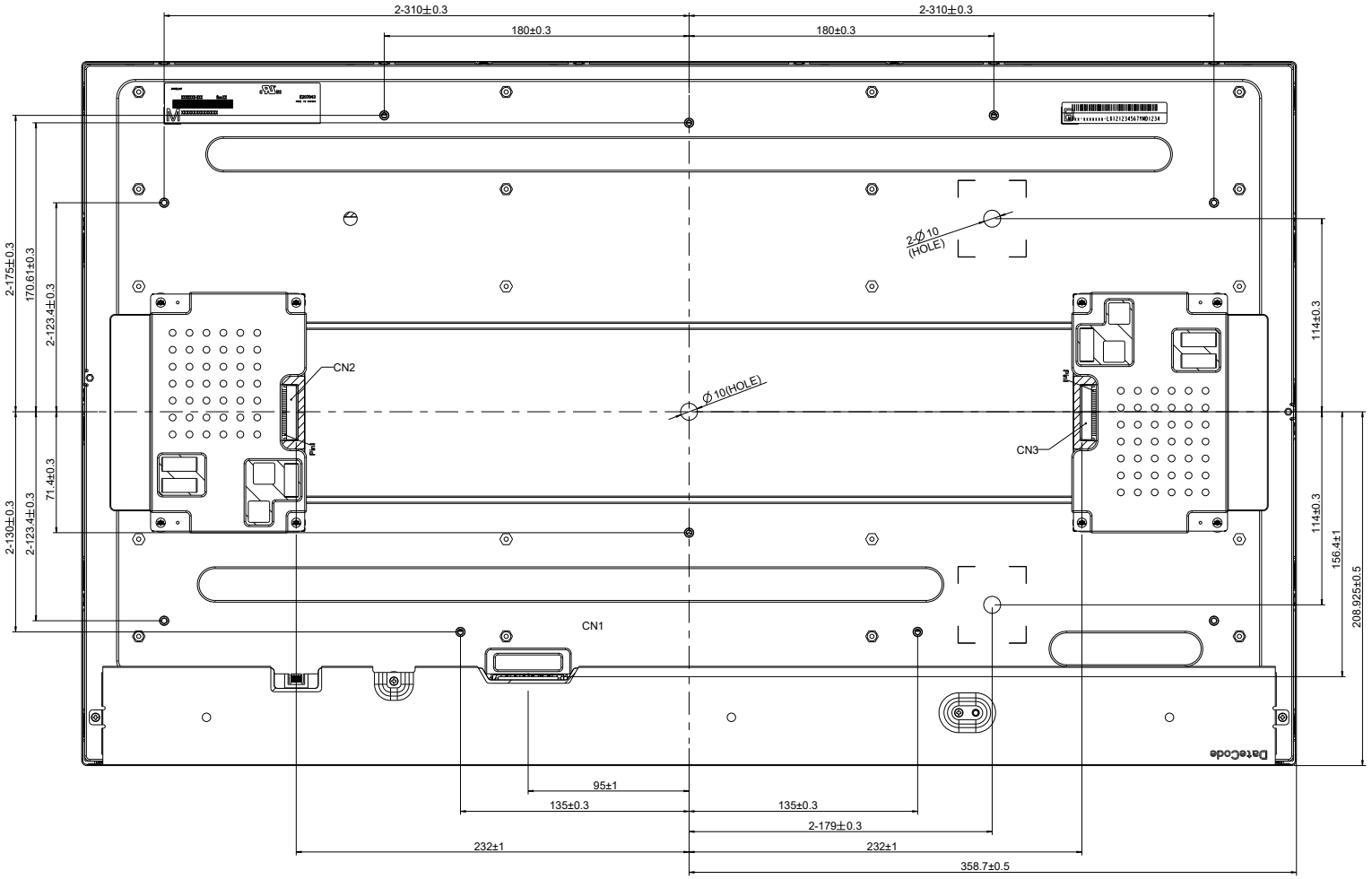

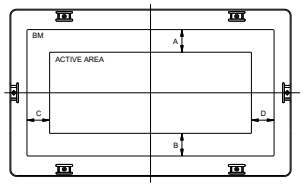

BM WIDTH VARIATION : |A-B|,|C-D|=1.0 (MAX.)
FIG.1

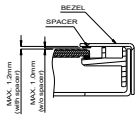

SECTION
GAP BTW BEZEL AND POL.

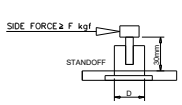

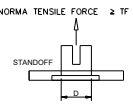

NOTES:
1.UNSPECIFIED TOLERANCE: 0.5mm.
2.MODULE BACKSIDE CAN'T WITHSTAND ANYTHING EXCEPT USER HOLE.
3.DISPLAY AREA POSITION TOLERANCE: |A-B|<=1.0mm & |C-D|<=1.0mm(SEE FIG.1).
4.USER HOLE(STANDOFF):M3, PITCH=0.5/MACHINE, MAX. TORQUE=5.0kgf-cm, MAX. DEPTH=10.0mm
DIAMETER=5.5mm, SIDE FORCE(MAX.)=20kgf,NOMAL TENSILE FORCE(MAX.)=40kgf
4.CONNECTOR TYPE:
CN1:1st,P-TWO,187059-51221
2nd,FCN,WF23-402-5133
CN2/CN3:1st,FCN,JH2-D2-143N
2nd,Cvilux,CI0114M1HR0-H

設計驗證
工程課
2026 -03- 24
發行
錦德科技開發股份有限公司

3TFTLCD316A(T0187)

APPROVED	K.S. Fan	UNITCHART	A
CHECKED	Jared Chen	ANEX MODULE SPECIFICATION	2/2
DESIGNED	Wish Huang	InnoLux	A0