承 認 書
APPROVAL SHEET

公 司 名 稱： DIVA Laboratories, Ltd.
Company Name

設計驗證
工程課
2026 -03- 18
發行
鈺泰科技開發股份有限公司

廠 牌 名 稱： Silergy
Brand Name

品 名 規 格： SY8388ARHC
Part Number

客 戶 料 號： 3ASY838801Y (A0575)
QISDA 7D.08388.045
Customer Part Number

日 期： 2025/06/26
Date

鈺泰電子股份有限公司
TEL:2659-0303
台北市內湖區環山路一段80號10樓

SY8388A

High Efficiency Fast Response, 8A, 24V Input Synchronous Step Down Regulator

General Description

SY8388A develops a high efficiency synchronous step-down DC/DC regulator capable of delivering 8A current over a wide input voltage range of 4V to 24V.

Silergy's proprietary Instant-PWM™ fast-response, constant-on-time (COT) PWM control method supports high input/output voltage ratios (low duty cycles), and fast transient response while maintaining a near constant operating frequency over line, load and output voltage ranges. This control method provides stable operation without complex compensation and even with low ESR ceramic capacitors.

Internal 20mΩ power and 10mΩ synchronous rectifier switches provide excellent efficiency over a range of applications, especially for low output voltages and low duty cycles. SY8388A also integrates a bypass switch which allows the IC to be powered by external DC source. Cycle-by-cycle current limit, input under voltage lock-out, internal soft-start, output under voltage protection and over voltage protection and thermal shutdown provide safe operation in all operating conditions. The SY8388A is available in a compact QFN2.5×2.5-16 package.

Ordering Information

SY8388 □(□□)□
- Temperature Code
- Package Code
- Optional Spec Code

Ordering Number	Package type	Note
SY8388ARHC	QFN2.5×2.5-16	--

Features

- Low $R_{DS(ON)}$ for Internal Switches (Top/Bottom): 20/10 mΩ
- Wide Input Voltage Range: 4~24V
- Integrated Bypass Switch: 1.5Ω
- Instant PWM Architecture to Achieve Fast Transient Responses
- Internal Soft-Start Limits the Inrush Current
- Pseudo-Constant Frequency: 600kHz
- Adjustable Output Voltage Application
- 8A Output Current Capability
- ±1% Internal Reference Voltage
- PFM/FCCM Selectable Light Load Operation Mode
- Power Good Indicator
- Output Discharge Function
- Cycle-by-cycle Valley and Peak Current Limit Protection
- Programmable Valley Current Limit Threshold by ILMT Pin
- Hic-cup Mode Output Under Voltage Protection
- Auto-recovery Mode Output Over Voltage Protection
- Auto-recovery Mode Over Temperature Protection
- Input UVLO
- RoHS Compliant and Halogen Free
- Compact Package: QFN2.5×2.5-16

Applications

- LCD-TV/Net-TV/3DTV
- Set Top Box
- Notebook
- High Power AP

Silergy Corp. Confidential Prepared For 1000038_TWDIVA

Typical Applications

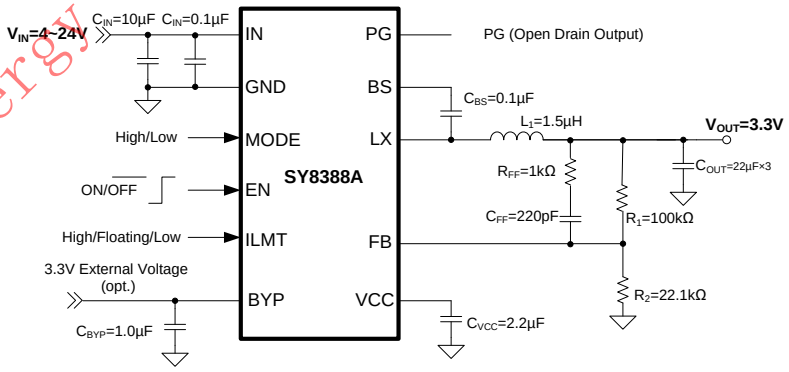

Figure1. Schematic Diagram

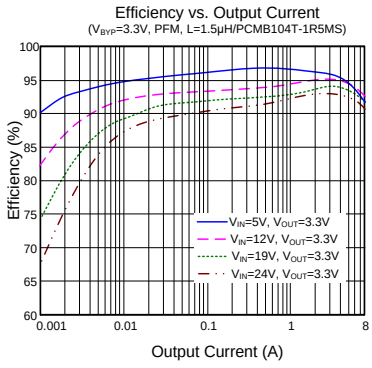

Figure2. Efficiency vs. Output Current

© 2021 Silergy Corp. All Rights Reserved.

Pinout (top view)

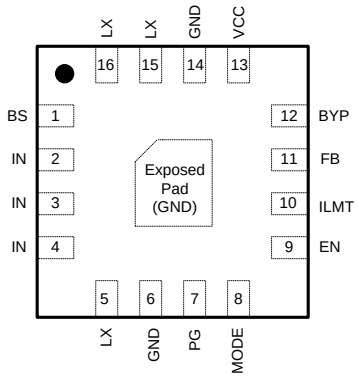

(QFN2.5×2.5-16)

Top Mark: B3*xyz*, (Device code: B3, ***x=year code, y=week code, z= lot number code***)

Pin Name	Pin Number	Pin Description
BS	1	Boot-strap pin. Supply high side gate driver. Connect a 0.1μF ceramic capacitor between the BS and the LX pin.
IN	2, 3, 4	Input pin. Decouple this pin to the GND pin with at least a 10μF ceramic capacitor. A 0.1μF input ceramic capacitor is recommended to reduce the input noise.
LX	5, 15, 16	Inductor pin. Connect this pin to the switching node of the inductor.
GND	6, 14, EP	Ground pin.
PG	7	Power good Indicator. Open drain output when the output voltage is within 90% to 120% of regulation point.
MODE	8	Operating mode selection under light load. Pull this pin low for PFM operating and pull this pin high for FCCM operation. Do not leave this pin floating.
EN	9	Enable control of the IC. Pull high to turn on the IC and pull low to turn off the IC.
ILMT	10	Valley current limit threshold selection pin. See Table1 to find more details.
FB	11	Output feedback pin. Connect to the center point of resistor divider.
BYP	12	External 3.3V bypass power supply input. Decouple this pin to GND with a 1μF ceramic capacitor. Leave this pin floating or connect this pin to the GND if it is not used.
VCC	13	Internal 3.3V LDO output. Power supply for internal analog circuits and driving circuit. Decouple this pin to GND with a 2.2μF ceramic capacitor.

Silergy Corp Confidential Prepared For D00038_TWDIVA

© 2021 Silergy Corp. All Rights Reserved.

Block Diagram

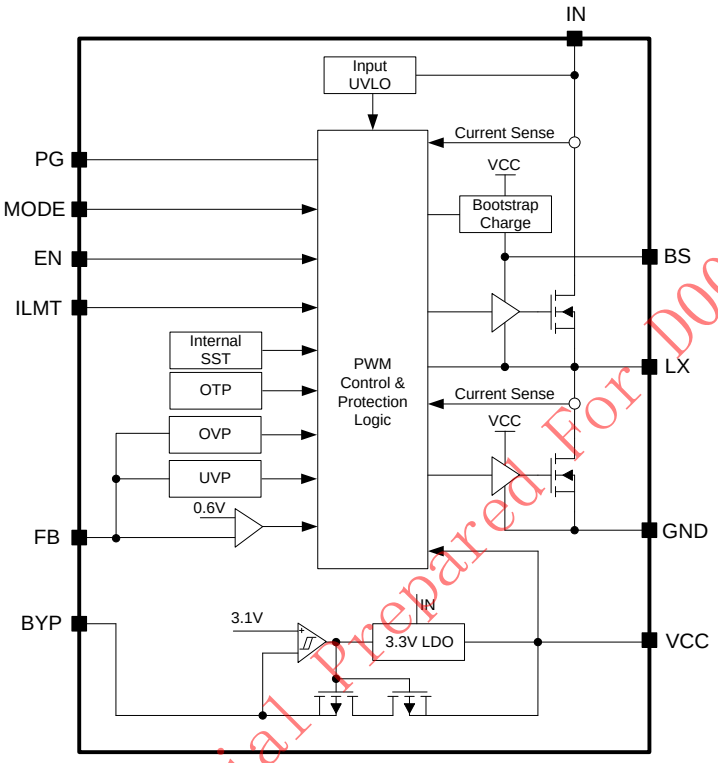

Figure3. Block Diagram

Silergy Corp Confidential Prepared For D00038_TWDIVA

Absolute Maximum Ratings (Note 1)

Supply Input Voltage ---------- -0.3V to 26V
IN-LX, LX, PG, MODE, EN Voltage---------- -0.3V to IN+0.3V
BS-LX, ILMT, VCC Voltage---------- -0.3V to 4V
FB, BYP Voltage ---------- -0.3V to 6V
Maximum Power Dissipation, $P_{D,MAX}$ @ T_A = 25°C QFN2.5×2.5-16 ---------- 3W
Package Thermal Resistance (Note 2)
θ_{JA}, QFN2.5×2.5-16 ---------- 33°C/W
θ_{JC}, QFN2.5×2.5-16 ---------- 5.5°C/W
Junction Temperature Range ---------- -40°C to 150°C
Lead Temperature (Soldering, 10 sec.) ---------- 260°C
Storage Temperature Range ---------- -65°C to 150°C
Dynamic LX Voltage in 10ns Duration ---------- GND-5V to IN+3V
Dynamic LX Voltage in 20ns Duration ---------- GND-1V to IN+2V

Recommended Operating Conditions (Note 3)

Supply Input Voltage ---------- 4V to 24V
Junction Temperature Range ---------- -40°C to 125°C
Ambient Temperature Range ---------- -40°C to 85°C

© 2021 Silergy Corp. All Rights Reserved.

Electrical Characteristics

(V_{IN}= 12V, C_{OUT}= 66µF, T_A= 25°C, I_{OUT}= 1A unless otherwise specified)

Parameter	Symbol	Test Conditions	Min	Typ	Max	Unit
Input Voltage Range	V_{IN}		4		24	V
Input UVLO Threshold	V_{UVLO}	V_{IN} rising			3.9	V
UVLO Hysteresis	V_{HYS}			0.5		V
Quiescent Current	I_Q	PFM, I_{OUT}=0A, V_{OUT}=V_{SET}×105%		140	170	µA
Shutdown Current	I_{SHDN}	EN=0		4	9	µA
Feedback Reference Voltage	V_{REF}		0.594	0.600	0.606	V
FB Input Current	I_{FB}	V_{FB}=1V	-50		50	nA
Top FET $R_{DS(ON)}$	$R_{DS(ON)1}$			20		mΩ
Bottom FET $R_{DS(ON)}$	$R_{DS(ON)2}$			10		mΩ
Output Discharge Current	I_{DIS}	V_{OUT}=5V		100		mA
Top FET Current Limit	$I_{LMT,TOP}$			22		A
Bottom FET Current Limit	$I_{LMT,BOT}$	ILMT=Low	8			A
		ILMT=Floating	12			A
		ILMT=High	16			A
Bottom FET Reverse Current Limit	$I_{LMT,RVS}$	FCCM mode	3	4.8		A
Soft-start Time	t_{SS}	V_{FB} from 0% to100%V_{REF} (Note 4)		1.2	1.98	ms
EN Input Voltage High	$V_{EN,\ H}$		1			V
EN Input Voltage Low	$V_{EN,\ L}$				0.4	V
MODE Voltage for PFM Mode	$V_{MODE,PFM}$		0		0.4	V
MODE Voltage for FCCM Mode	$V_{MODE,FCCM}$		1		V_{IN}	V
EN/MODE Input Current	$I_{EN/MODE}$	V_{EN}/V_{MODE}=3.3V			1	µA
ILMT Input Voltage High	$V_{ILMT,\ H}$		2.5			V
ILMT Input Voltage Low	$V_{ILMT,\ L}$				0.4	V
Switching Frequency	f_{SW}	V_{OUT}=5V, CCM	510	600	690	kHz
Min ON Time	$t_{ON,MIN}$	V_{IN}=$V_{IN,MAX}$ (Note 4)		50		ns
Min OFF Time	$t_{OFF,MIN}$			150		ns
VCC Output Voltage	V_{CC}	VCC adds 1mA load	3.15	3.3	3.45	V
Output Over Voltage Threshold	V_{OVP}	V_{FB} rising	115	120	125	%V_{REF}
Output Over Voltage Hysteresis	$V_{OVP,HYS}$			5		%V_{REF}
Output Under Voltage Protection Threshold	V_{UVP}		55	60	65	%V_{REF}
Output UVP Delay	$t_{UVP,DLY}$	(Note 4)		200		µs
Power Good Threshold	$V_{PG,F}$	V_{FB} falling(not good)	80	83	86	%V_{REF}
Power Good Hysteresis	$V_{PG,HYS}$	V_{FB} rising (good)		7		%V_{REF}
Power Good Delay	$t_{PG,R}$	Low to high (Note 4)		200		µs
	$t_{PG,F}$	High to low (Note 4)		30		µs
Power Good Low Voltage	$V_{PG,LOW}$	V_{FB}=0V, I_{PG}=5mA			0.45	V
Bypass Switch $R_{DS(ON)}$	$R_{DS(ON),BYP}$			1.5		Ω
Bypass Switch Turn-on Voltage	V_{BYP}		2.97	3.1		V
Bypass Switch Switchover Hysteresis	$V_{BYP,HYS}$			0.2		V
Bypass Switch OVP Threshold	$V_{BYP,OVP}$			120		%V_{LDO}
Thermal Shutdown Temperature	T_{OTP}	T_J rising (Note 4)		150		°C
Thermal Shutdown Hysteresis	$T_{OTP,HYS}$	(Note 4)		15		°C

Silergy Corp Confidential Prepared For D000038_TWDIVA

© 2021 Silergy Corp. All Rights Reserved.

Note 1: Stresses beyond the "Absolute Maximum Ratings" may cause permanent damage to the device. These are stress ratings only. Functional operation of the device at these or any other conditions beyond those indicated in the operational sections of the specification is not implied. Exposure to absolute maximum rating conditions for extended periods may affect device reliability

Note 2: Package thermal resistance is measured in the natural convection at T_A = 25°C on a 8.5cm×8.5cm size, four-layer Silergy Evaluation Board with 2-oz copper.

Note 3: The device is not guaranteed to function outside its operating conditions.

Note4：Guaranteed by design.

Silergy Corp. Confidential Prepared For D00038_TWDIVA

© 2021 Silergy Corp. All Rights Reserved.

Typical Performance Characteristics

(T_A=25°C, V_{IN}=12V, V_{OUT}=3.3V, L=1.5µH, C_{OUT}=66µF, unless otherwise noted)

Efficiency vs. Output Current
(V_{BYP}=3.3V, PFM, L=1.0µH/PCMB104T-1R0MT)

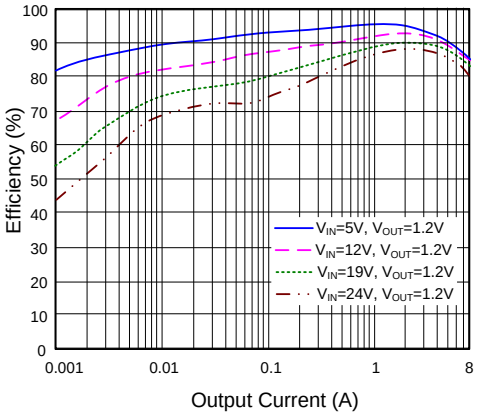

Efficiency vs. Output Current
(V_{BYP}=3.3V, FCCM, L=1.0µH/PCMB104T-1R0MT)

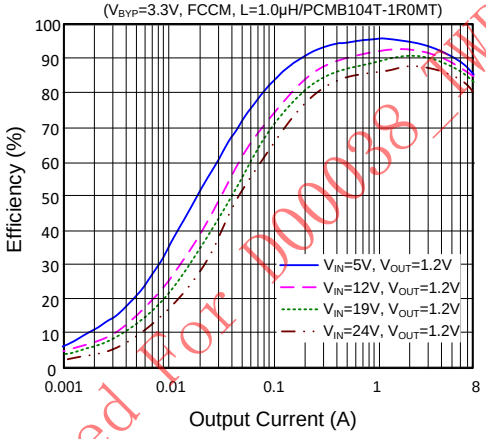

Efficiency vs. Output Current
(V_{BYP}=3.3V, PFM, L=1.0µH/PCMB104T-1R0MT)

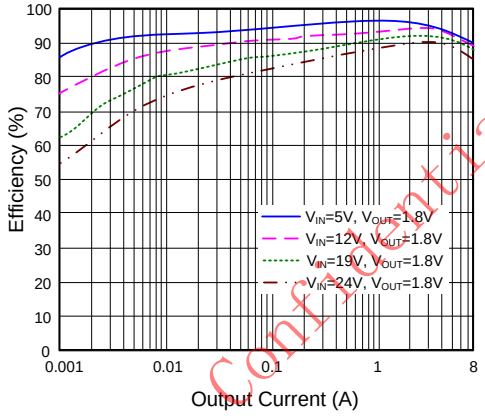

Efficiency vs. Output Current
(V_{BYP}=3.3V, FCCM, L=1.0µH/PCMB104T-1R0MT)

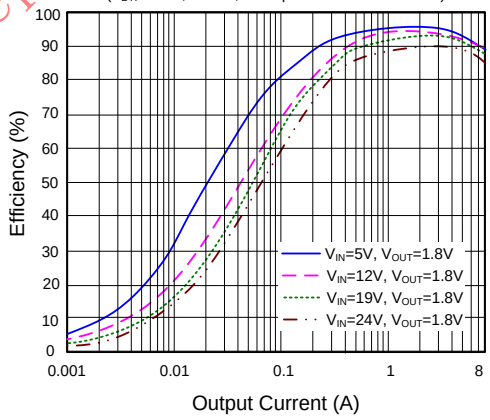

Efficiency vs. Output Current
(V_{BYP}=3.3V, PFM, L=1.5µH/PCMB104T-1R5MS)

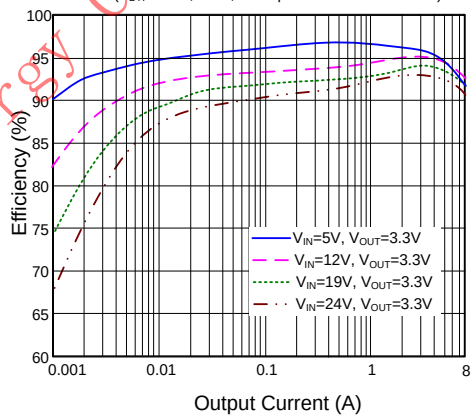

Efficiency vs. Output Current
(V_{BYP}=3.3V, FCCM, L=1.5µH/PCMB104T-1R5MS)

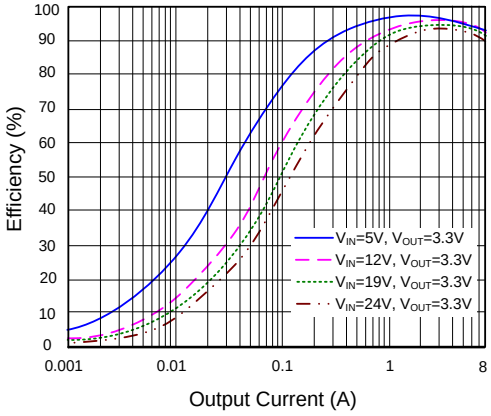

Silergy Corp. Confidential Prepared for D000038_TWDIVA

© 2021 Silergy Corp. All Rights Reserved.

Efficiency vs. Output Current
(V_{BYP}=3.3V, PFM, L=1.5μH/PCMB104T-1R5MS)

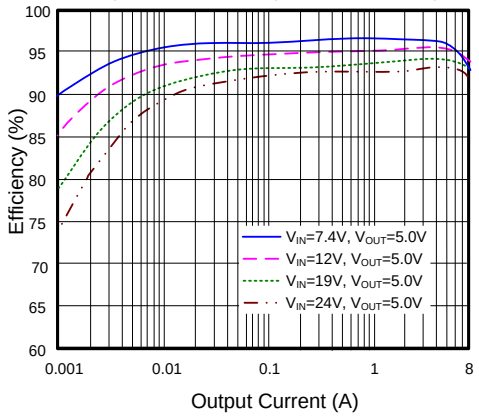

Efficiency vs. Output Current
(V_{BYP}=3.3V, FCCM, L=1.5μH/PCMB104T-1R5MS)

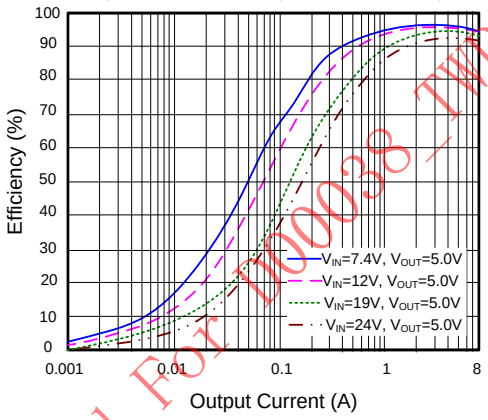

Startup from V_{IN}
(V_{IN}=12V, V_{OUT}=3.3V, I_{OUT}=8A)

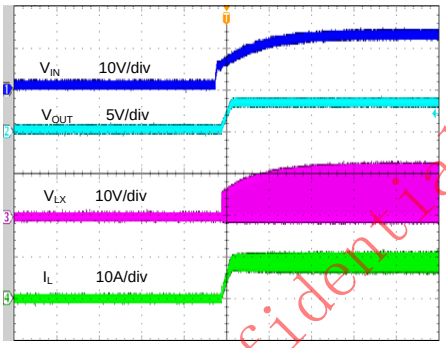

Time (4ms/div)

Shutdown from V_{IN}
(V_{IN}=12V, V_{OUT}=3.3V, I_{OUT}=8A)

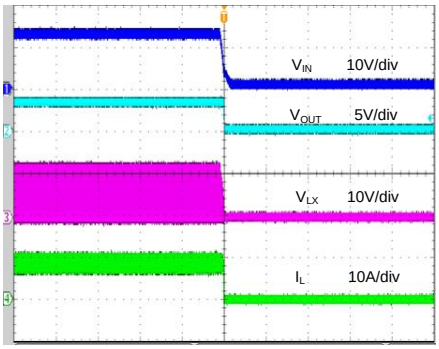

Time (4ms/div)

Startup from EN
(V_{IN}=12V, V_{OUT}=3.3V, I_{OUT}=8A)

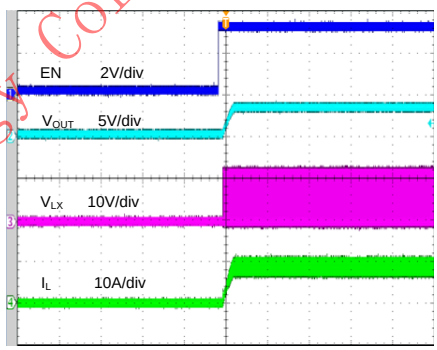

Time (4ms/div)

Shutdown from EN
(V_{IN}=12V, V_{OUT}=3.3V, I_{OUT}=8A)

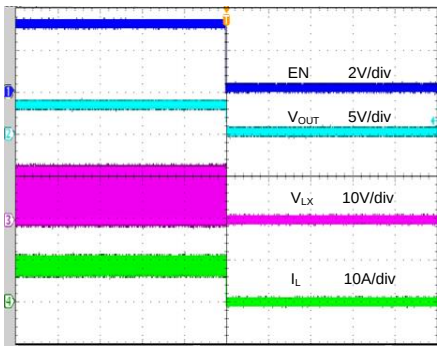

Time (4ms/div)

Silergy Corp. Confidential Prepared For D000038_TWDIVA

© 2021 Silergy Corp. All Rights Reserved.

Output Short Circuit Protection
(V_{IN}=12V, V_{OUT}=3.3V, I_{OUT}=0A~Short, ILMT=Low, PFM)

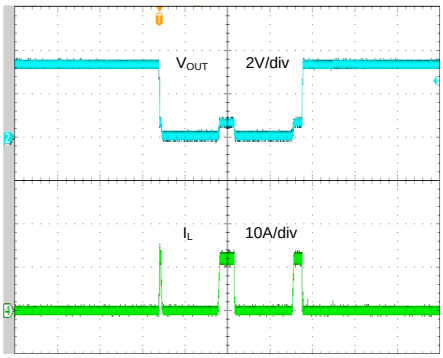

Time (4ms/div)

Output Short Circuit Protection
(V_{IN}=12V, V_{OUT}=3.3V, I_{OUT}=8A~Short, ILMT=Low)

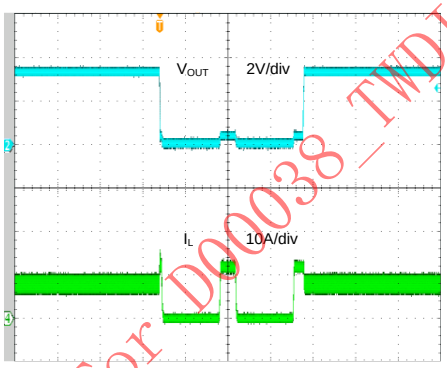

Time (4ms/div)

Output Short Circuit Protection
(V_{IN}=12V, V_{OUT}=3.3V, I_{OUT}=0A~Short, ILMT=Floating, PFM)

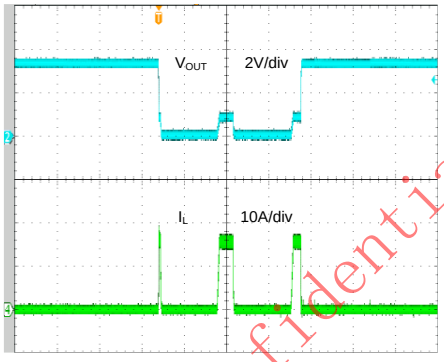

Time (4ms/div)

Output Short Circuit Protection
(V_{IN}=12V, V_{OUT}=3.3V, I_{OUT}=8A~Short, ILMT=Floating)

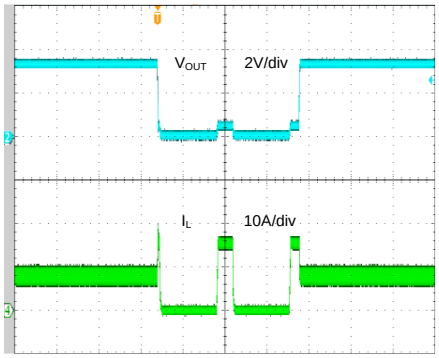

Time (4ms/div)

Output Short Circuit Protection
(V_{IN}=12V, V_{OUT}=3.3V, I_{OUT}=0A~Short, ILMT=High, PFM)

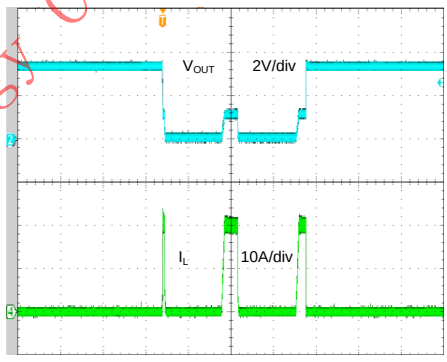

Time (4ms/div)

Output Short Circuit Protection
(V_{IN}=12V, V_{OUT}=3.3V, I_{OUT}=8A~Short, ILMT=High)

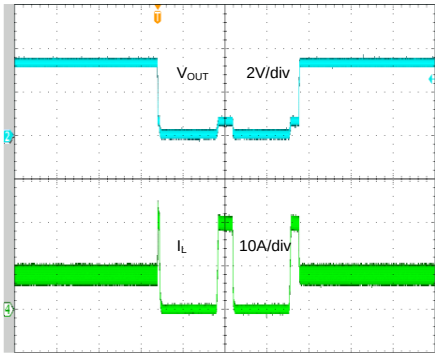

Time (4ms/div)

Silergy Corp. Confidential Prepared For D00038_TWDIVA

© 2021 Silergy Corp. All Rights Reserved.

Output Ripple

(V_{IN}=12V, V_{OUT}=3.3V, I_{OUT}=0A, PFM)

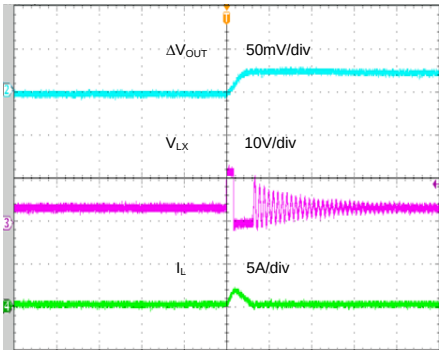

Time (2μs/div)

Output Ripple

(V_{IN}=12V, V_{OUT}=3.3V, I_{OUT}=0A, FCCM)

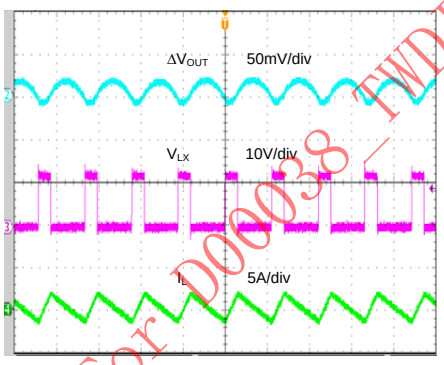

Time (2μs/div)

Output Ripple

(V_{IN}=12V, V_{OUT}=3.3V, I_{OUT}=4A)

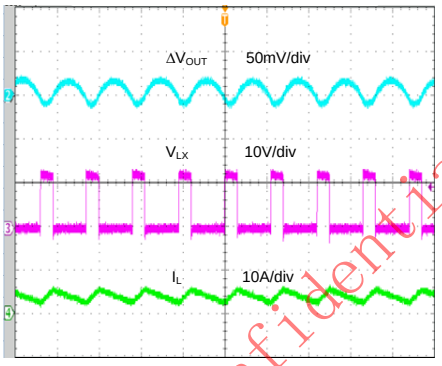

Time (2μs/div)

Output Ripple

(V_{IN}=12V, V_{OUT}=3.3V, I_{OUT}=8A)

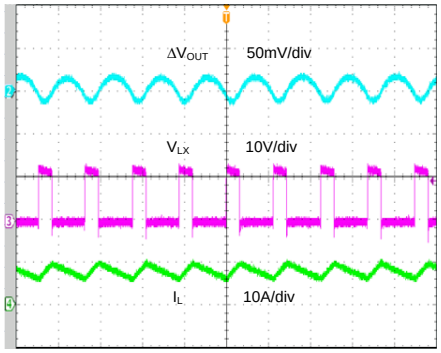

Time (2μs/div)

Load Transient

(V_{IN}=12V, V_{OUT}=3.3V, I_{OUT}=0~4A, PFM)

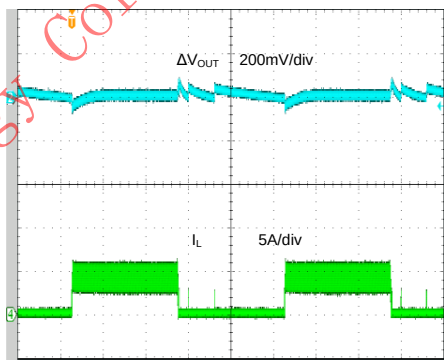

Time (200μs/div)

Load Transient

(V_{IN}=12V, V_{OUT}=3.3V, I_{OUT}=0~4A, FCCM)

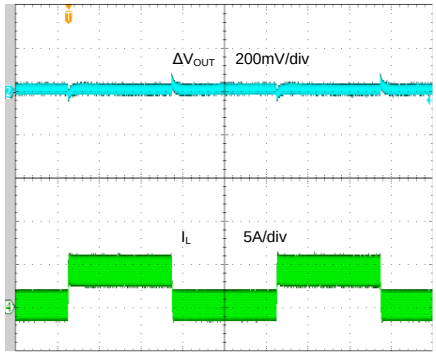

Time (200μs/div)

Silergy Corp. Confidential Prepared For D000038_TWDIVA

© 2021 Silergy Corp. All Rights Reserved.

Load Transient

(V_{IN}=12V, V_{OUT}=3.3V, I_{OUT}=0.8~8A, PFM)

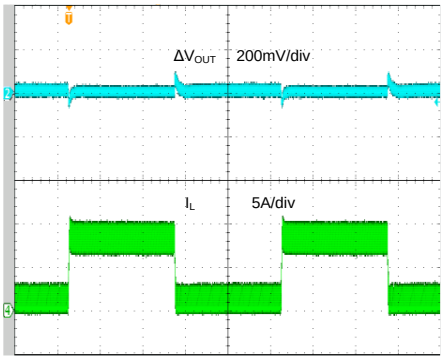

Time (200μs/div)

Load Transient

(V_{IN}=12V, V_{OUT}=3.3V, I_{OUT}=0.8~8A, FCCM)

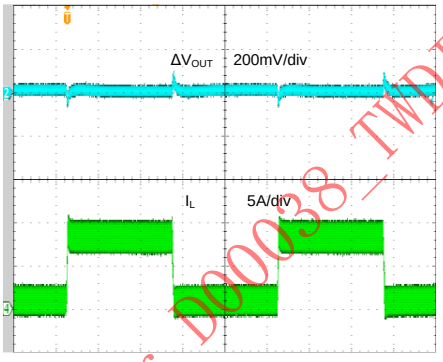

Time (200μs/div)

Switching Frequency vs. Output Voltage

(V_{IN}=12V, I_{OUT}=0A, FCCM)

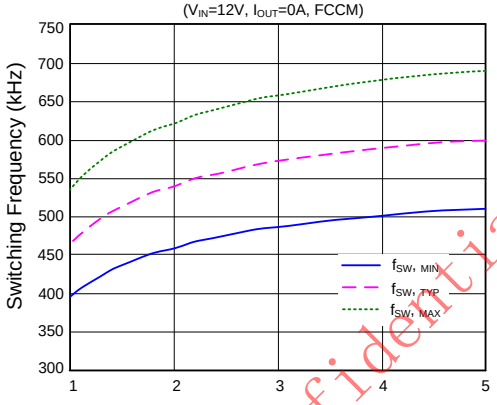

Output Voltage (V)

Silergy Corp. Confidential Prepared For D00038_TWDIVA

© 2021 Silergy Corp. All Rights Reserved.

Detailed Description

General Features

Constant-on-time Architecture

Fundamental to any constant-on-time (COT) architecture is the one-shot circuit or on-time generator, which determines how long to turn on the high-side power switch. Each on-time (t_{ON}) is a "fixed" period internally calculated to operate the step down regulator at the desired switching frequency considering the input and output voltage ration, t_{ON} = (V_{OUT}/V_{IN})×($1/f_{SW}$). For example, considering that a hypothetical converter targets 3.3V output from a 12V input at 600kHz, the target on-time is (3.3V/12V)×(1/600kHz) = 458ns. Each t_{ON} pulse is triggered by the feedback comparator when the output voltage as measured at FB drops below the target value. After one t_{ON} period, a minimum off-time ($t_{OFF,MIN}$) is imposed before any further switching is initiated, even if the output voltage is less than the target. This approach avoids the making any switching decisions during the noisy periods just after switching events and while the switching node (LX) is rapidly rising or falling.

In a COT architecture, there is no fixed clock, so the high-side power switch can turn on almost immediately after a load transient and subsequent switching pulses can be quickly initiated, ramping the inductor current up to meet load requirements with minimal delays. Traditional current mode or voltage mode control methods must simultaneously monitor the feedback voltage, current feedback and internal ramps and compensation signals to determine when to turn off the high-side power switch and turn on the low-side synchronous rectifier. Considering these small signals in a switching environment are difficult to be noise-free after switching large currents, making those architectures difficult to apply in noisy environments and at low duty cycles.

Minimum Duty Cycle and Maximum Duty Cycle

In the COT architecture, there is no limitation for small duty cycle, since at very low duty cycle operation, once the on-time is close to the minimum on time, the switching frequency can be reduced as needed to always ensure a proper operation.

The device can support ~75% maximum duty cycle operation under T_J=-40℃~125℃ condition.

Instant-PWM Operation

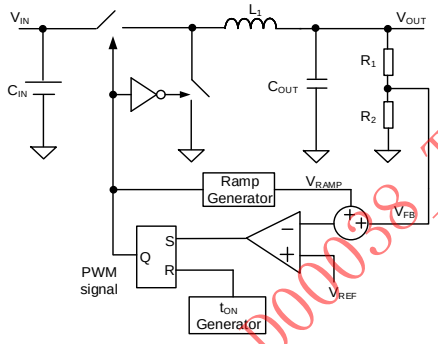

Silergy's instant-PWM control method adds several proprietary improvements to the traditional COT architecture. Whereas most legacy based on COT implementations require a dedicated connection to the output voltage terminal to calculate the t_{ON} duration, instant-PWM control method derives this signal internally. Another improvement optimizes operation with low ESR ceramic output capacitors. In many applications it is desirable to utilize very low ESR ceramic output capacitors, but legacy COT regulators may become unstable in these cases because the beneficial ramp signal that results from the inductor current flowing into the output capacitor maybe become too small to maintain smooth operation. For this reason, instant-PWM synthesizes a virtual replica of this signal internally. This internal virtual ramp and the feedback voltage are combined and compared to the reference voltage. When the sum is lower than the reference voltage, the t_{ON} pulse is triggered as long as the minimum t_{OFF} has been satisfied and the inductor current as measured in the low-side synchronous rectifier is lower than the bottom FET current limit. As the t_{ON} pulse is triggered, the low-side synchronous rectifier turns off and the high-side power switch turns on. Then the inductor current ramps up linearly during the t_{ON} period. At the conclusion of the t_{ON} period, the high-side power switch turns off, the low-side synchronous rectifier turns on and the inductor current ramps down linearly. This action also initiates the minimum t_{OFF} timer to ensure sufficient time for stabilizing any transient conditions and settling the feedback comparator before the next cycle is initiated. This minimum t_{OFF} is relatively short so that during high speed load transient t_{ON} can be retriggered with minimal delay, allowing the inductor current to ramp quickly to provide sufficient energy to the load side.

In order to avoid shoot-through, a dead time (t_{DEAD}) is generated internally between the high-side power

Silergy Corp. Confidential Prepared For D00038_TWDIVA

© 2021 Silergy Corp. All Rights Reserved.

switch off and the low-side synchronous rectifier on period or the low-side synchronous rectifier off and the high-side power switch on period.

Light Load Operation Mode Selection

PFM or FCCM light load operation is selected by MODE pin. Pull MODE pin low for PFM operation, and pull this pin high for FCCM operation.

If PFM light load operation is selected, under light load conditions, typically $I_{OUT} < 1/2 \times \Delta I_L$, the current through the low-side synchronous rectifier will ramp to near zero before the next t_{ON} time. When this occurs, the low-side synchronous rectifier turns off, preventing recirculation current that can seriously reduce efficiency under these light load conditions. As load current is further reduced, and the combined feedback and ramp signals remain much greater than the reference voltage, the instant-PWM control loop will not trigger another t_{ON} until needed, so the apparent operating switching frequency will correspondingly drop, further enhancing efficiency. The switching frequency can be lower than audible frequency area under deep light load or null load conditions. Continuous conduction mode (CCM) resumes smoothly as soon as the load current increases sufficiently for the inductor current to remain above zero at the time of the next t_{ON} cycle. The device enters CCM once the load current exceeds the critical level. After that, the switching frequency stays fairly constant over the output current range. The critical level of the load current is determined with

$$I_{OUT\_CTL} = \frac{\Delta I_L}{2} = \frac{V_{OUT} \times (1-D)}{2 \times f_{SW} \times L_1}$$

If FCCM light load operation is selected, under light load conditions, the low-side synchronous rectifier still turns on even when the inductor current crosses zero. Current flow will continue until the next t_{ON} cycle. The device always operates under continuous conditions mode and keeps fairly constant switching frequency over all the output current range.

Input Under Voltage Lock-out (UVLO)

To prevent operation before all internal circuitry is ready and to ensure that the power and synchronous rectifier switches can be sufficiently enhanced, the instant-PWM incorporates one input under-voltage lockout protections. The device remains in a low current state and all switching actions are inhibited until V_{IN} exceeds their own UVLO (rising) threshold. At that time, if EN is enabled, the device will start-up by initiating a soft-start ramp. If V_{IN} falls below V_{UVLO} less than the input UVLO hysteresis, switching actions will again be suppressed.

If the input UVLO threshold is low for some high input UVLO threshold requirement applications, use EN to adjust the input UVLO by adopting two external divided resistors.

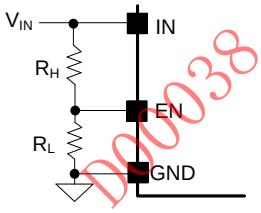

Enable Control

The EN input is a high-voltage capable input with logic-compatible threshold. When EN is driven above 1V normal device operation will be enabled. When driven < 0.4V the device will be shut down, reducing input current to < 10μA.

It is not recommended to connect EN and IN directly. A resistor in a range of 1kΩ to 1MΩ should be used if EN is pulled high by IN.

Startup and Shutdown

The SY8388A incorporates an internal soft-start circuit to smoothly ramp the output to the desired voltage whenever the device is enabled. Internally, the soft-start circuit clamps the output at a low voltage and then allows the output to rise to the desired voltage over approximately 1.2ms, which avoids high current flow and transients during startup. The startup and shutdown sequence is shown below.

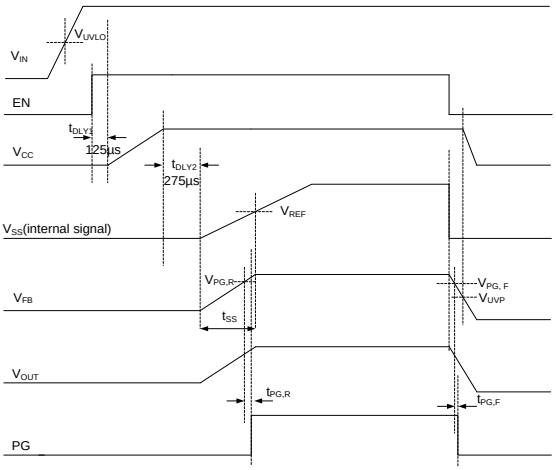

After the input voltage exceeds its own UVLO (rising) threshold, V_{CC} is turned on after EN is

Silergy Corp. Confidential Prepared for D00038_TWJWA

© 2021 Silergy Corp. All Rights Reserved.

enabled for one delay time t_{DLY1}, the buck regulator is turned on after another delay time t_{DLY2} after VCC voltage is set up. When the output voltage is 90% of the regulation point, PG becomes high-impedance after one delay time $t_{PG,R}$.

If the output is pre-biased to a certain voltage before start-up, the device disables the switching of both the high-side power switch and the low-side synchronous rectifier until the voltage on the internal soft start circuit voltage V_{SS} exceeds the sensed output voltage at the FB node.

Output Discharge

SY8388A discharges the output voltage when the converter shuts down from V_{IN} or EN, or thermal shutdown, so that output voltage can be discharged in a minimal time, even output load current is zero. The discharge FET in parallel with the low-side synchronous rectifier turns on after the low-side synchronous rectifier turns off when shut down logic is triggered. The output discharge current is typically 100mA when the LX voltage is 5V. Note that the discharge FET is not active beyond these shutdown conditions.

Output Power Good Indicator

The buck power good indicator is an open drain output controlled by a window comparator connected to the feedback signal. If V_{FB} is greater than $V_{PG,R}$ and less than V_{OVP} for at least the power good delay time (low to high), PG will be high-impedance.

PG should be connected to V_{IN} or another voltage source through a resistor (e.g. 100kΩ). After the input voltage exceeds its own UVLO (rising) threshold, the PG MOSFET is turned on so that PG is pulled to GND before output voltage is ready. After feedback voltage V_{FB} reaches $V_{PG,R}$, PG is pulled high (after one delay time typical 200μs). When V_{FB} drops to $V_{PG,F}$, or rises to V_{OVP} for one OVP delay time, PG is pulled low (after one delay time typical 30μs).

External Bootstrap Capacitor Connection

This device integrates a floating power supply for the gate driver that operates the high-side power switch. Proper operation requires a 0.1μF low ESR ceramic capacitor to be connected between BS and LX. This bootstrap capacitor provides the gate driver supply voltage for the high-side N-channel MOSFET power switch.

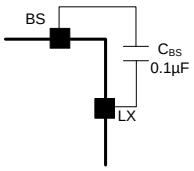

VCC Linear Regulator

An internal linear regulator (VCC) produces a 3.3V supply from VIN that powers the internal gate drivers, PWM logic, analog circuitry, and other blocks. Connect a 2.2μF low ESR ceramic capacitor from VCC to GND.

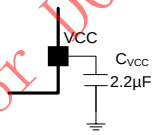

BYP Input

The control and drive circuit can also be powered by external 3.3V power supply. When a 3.3V external power supply is connected to the BYP pin, the VCC LDO is turned off and the switch between BYP and VCC is turned on. The overall efficiency may be improved by connecting the BYP pin to external 3.3V switching power supply. Connect a 1.0μF low ESR ceramic capacitor from BYP pin to GND when BYP is supplied by 3.3V external power. Leave the BYP pin floating or connect this pin to the GND if it is not used.

Fault Protection Modes

Output Current Limit

Instant-PWM incorporates a cycle-by-cycle "valley" current limit. Inductor current is measured in the low-side synchronous rectifier when it turns on and as the inductor current ramps down. If the current exceeds the bottom FET current limit threshold, t_{ON} is inhibited until the current returns back to the limit threshold or lower.

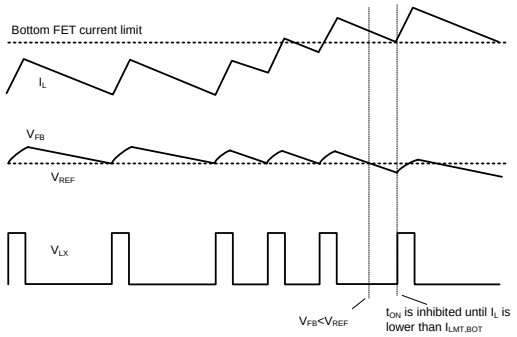

The device supports programmable valley current limit threshold. Pull ILMT pin low, floating or high

Silergy Corp. Confidential Prepared For D0000_TWDIVA

© 2021 Silergy Corp. All Rights Reserved.

for 3 gears successively increasing valley current limit threshold. The detailed pin configuration is shown in the table below. When the valley current limit occurs, the output current limit value is $I_{LMT,OUT}=I_{LMT,BOT}+\Delta I_L/2$,

$$\Delta I_L = \frac{V_{OUT} \times (V_{IN} - V_{OUT})}{V_{IN} \times f_{SW} \times L_1}$$

Table1: Programmable Valley Current Limit

ILMT Gears	$I_{LMT,BOT}$	Recommended Table
ILMT=Low	≥8A	Pull ILMT to GND by ≤10kΩ Resistor
ILMT=Floating	≥12A	ILMT pin floating
ILMT=High	≥16A	Pull ILMT to VCC by ≤10kΩ Resistor

When FCCM light load operation is selected, there is one bottom FET reverse current limit to ensure the negative current can be limited to a safe level. During t_{OFF} time, the low-side synchronous rectifier current is monitored. If the monitored current exceeds the reverse current limit, the low-side synchronous rectifier is turned off and triggers another t_{ON}.

The device also features cycle-by-cycle "peak" current limit (top FET current limit). During t_{ON} time, the high-side power switch current is monitored. If the monitored current exceeds the top FET current limit, the high-side power switch is turned off, the low-side synchronous rectifier is turned on and then t_{ON} is inhibited. t_{ON} can be not inhibited any more once low-side synchronous rectifier current is lower than the bottom FET current limit value.

Output Under Voltage Protection (UVP)

If V_{OUT} < ~60% of the set point for approximately 200μs occurring when the output short circuit or the load current is much heavier than the maximum current capacity, the output under voltage protection (UVP) will be triggered, and the device will enter into hic-cup protection mode. The hic-cup on time is 15ms, and the hic-cup off time is 6ms. If the output fault conditions are removed, the device will go back to normal operation in the nearest hic-cup on time.

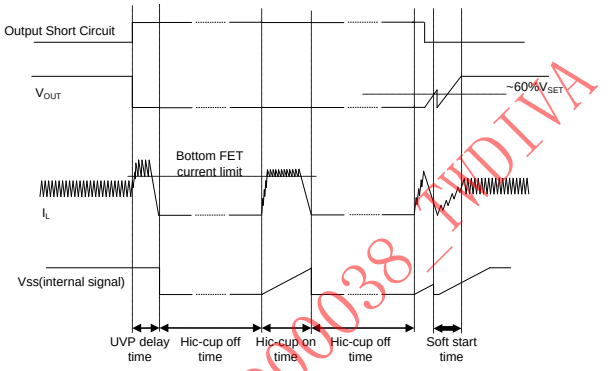

To avoid output overshoot, the internal soft-start circuit voltage V_{SS} should be pull low for a while when V_{FB} exceeds UVP threshold if the output fault conditions are removed during hic-cup on time, then the V_{SS} rises smoothly to ramp the output to the desired voltage during a new soft-start cycle.

Output Over Voltage Protection (OVP)

This device includes output over voltage protection (OVP). If the output voltage rises above the feedback regulation level, the high-side power switch naturally remains off and different actions are adopted in different operation mode.

When operating in PFM light load mode, if the output voltage remains high, the low-side synchronous rectifier remains on until the inductor current reaches zero and the switching actions are suppressed. The switching actions will be recovered once the combined feedback and ramp signals become lower than the reference voltage.

When operating in FCCM light load mode, if the output voltage remains high, the reverse current limit will be triggered and inductor current average value becomes negative, trying to make output voltage lower. If the output voltage continues to rise and exceeds the output over voltage threshold for more than OVP delay time, output over voltage protection (OVP) will be triggered, and the switching actions are suppressed. The switching actions will be recovered once the combined feedback and ramp signals become lower than the reference voltage. False OVP may happen under light load condition if the inductance is chosen too small and reverse current limit is triggered.

Over Temperature Protection (OTP)

Instant-PWM includes over temperature protection (OTP) circuitry to prevent overheating due to excessive power dissipation. This will shut down the device when the junction temperature exceeds 150°C.

Silergy Corp. Confidential- Prepared for D00038_TWDIVA

© 2021 Silergy Corp. All Rights Reserved.

Once the junction temperature cools down by approximately 15°C, the device will resume normal operation after a complete soft-start cycle. For continuous operation, provide adequate cooling so that the junction temperature does not exceed the OTP threshold.

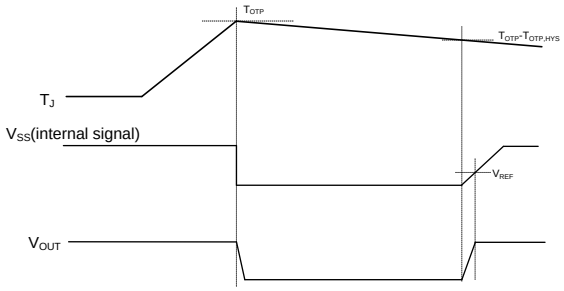

Design Procedure

Feedback Resistor Selection

Choose R_1 and R_2 to program the proper output voltage. To minimize the power consumption under light loads, it is desirable to choose large resistance values for both R_1 and R_2. A value of between 10kΩ and 1MΩ is strongly recommended for both resistors. If V_{SET} is 3.3V, R_1=100kΩ is chosen, then using following equation, R_2 can be calculated to be 22.1kΩ.

$$R_2 = \frac{0.6V}{V_{SET}-0.6V} \times R_1$$

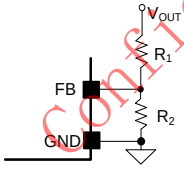

Input Capacitor Selection

Input filter capacitors are needed to reduce the ripple voltage on the input, to filter the switched current drawn from the input supply and to reduce potential EMI. When selecting an input capacitor, be sure to select a voltage rating at least 20% greater than the maximum voltage of the input supply and a temperature rating above the system requirements. X5R series ceramic capacitors are most often selected due to their small size, low cost, surge current capability and high RMS current ratings over a wide temperature and voltage range. However, systems that are powered by a wall adapter or other long and therefore inductive cabling may be susceptible to significant inductive ringing at the input to the device. In these cases, consider adding some bulk capacitance like electrolytic, tantalum or polymer type capacitors. Using a combination of bulk capacitors (to reduce overshoot or ringing) in parallel with ceramic capacitors (to meet the RMS current requirements) is helpful in these cases.

Consider the RMS current rating of the input capacitor, paralleling additional capacitors if required to meet the calculated RMS ripple current,

$$I_{CIN\_RMS} = I_{OUT} \times \sqrt{D \times (1-D)}$$

The worst-case condition occurs at D = 0.5, then

$$I_{CIN\_RMS,MAX} = \frac{I_{OUT}}{2}$$

For simplification, choose an input capacitor with an RMS current rating greater than half of the maximum load current.

On the other hand, the input capacitor value determines the input voltage ripple of the converter. If there is an input voltage ripple requirement in the system, choose an appropriate input capacitor that meets the specification.

Given the very low ESR and ESL of ceramic capacitors, the input voltage ripple can be estimated by

$$V_{CIN\_RIPPLE,CAP} = \frac{I_{OUT}}{f_{SW} \times C_{IN}} \times D \times (1\text{-}D)$$

The worst-case condition occurs at D = 0.5, then

$$V_{CIN\_RIPPLE,CAP,MAX} = \frac{I_{OUT}}{4 \times f_{SW} \times C_{IN}}$$

The capacitance value is less important than the RMS current rating. In most applications a single 10µF X5R capacitor is sufficient. Take care to locate the ceramic input capacitor as close to the device IN and GND pin as possible.

Inductor Selection

The inductor is necessary to supply constant current to the output load while being driven by the switched input voltage.

Instant-PWM operates well over a wide range of inductor values. This flexibility allows for optimization to find the best trade-off of efficiency, cost and size for a particular application. Selecting a low inductor value will help reduce size and cost and enhance transient response, but will increase peak inductor ripple current, reducing efficiency and increasing output voltage ripple. The low DC resistance (DCR) of these low value inductors may help reduce DC losses and increase efficiency. On the other hand, higher inductor values tend to have higher DCR and will slow transient response.

Silergy Corp. Confidential Prepared For 000038_INDIVA

© 2021 Silergy Corp. All Rights Reserved.

A reasonable compromise between size, efficiency, and transient response can be determined by selecting a ripple current (ΔI_L) about 20% ~ 40% of the desired full output load current. Start calculating the approximate inductor value by selecting the input and output voltages, the operating frequency (f_{SW}), the maximum output current ($I_{OUT,MAX}$) and estimating a ΔI_L as some percentage of that current.

$$L_1 = \frac{V_{OUT} \times (V_{IN} - V_{OUT})}{V_{IN} \times f_{SW} \times \Delta I_L}$$

Use this inductance value to determine the actual inductor ripple current (ΔI_L) and required peak current inductor current $I_{L,PEAK}$.

$$\Delta I_L = \frac{V_{OUT} \times (V_{IN} - V_{OUT})}{V_{IN} \times f_{SW} \times L_1}$$

And $I_{L,PEAK} = I_{OUT,MAX} + \Delta I_L/2$

Select an inductor with a saturation current and thermal rating in excess of $I_{L,PEAK}$.

If FCCM light load operation is selected, make sure the inductor value is high enough to avoid reverse current limit is been triggered just under steady state if the load current is zero.

For highest efficiency, select an inductor with a low DCR that meets the inductance, size and cost targets. Low loss ferrite materials should be considered.

Inductor Design Example

Consider a typical design for a device providing $3.3V_{OUT}$ at 8A from $12V_{IN}$, operating at 600kHz and using target inductor ripple current (ΔI_L) of 40% or 3.2A. Determine the approximate inductance value at first:

$$L_1 = \frac{3.3V \times (12V - 3.3V)}{12V \times 600kHz \times 3.2A} = 1.246\mu H$$

Next, select the nearest standard inductance value, in this case 1.5µH, and calculate the resulting inductor ripple current (ΔI_L):

$$\Delta I_L = \frac{3.3V \times (12V - 3.3V)}{12V \times 600kHz \times 1.5\mu H} = 2.66A$$

$I_{L,PEAK} = 8A + 2.66A/2 = 9.33A$

The resulting 2.66A ripple current is 2.66A/8A is ~33.3%, well within the 20% ~ 40% target.

$I_{L,PEAK,RVS} = 2.66A/2 = 1.33A < I_{LIM,RVS}$

Finally, select an available inductor with a saturation current higher than the resulting $I_{L,PEAK}$ of 9.33A.

Output Capacitor Selection

Instant-PWM provides excellent performance with a wide variety of output capacitor types. Ceramic and POS types are most often selected due to their small size and low cost. Total capacitance is determined by the transient response and output voltage ripple requirements of the system.

Output Ripple

Output voltage ripple at the switching frequency is caused by the inductor current ripple (ΔI_L) on the output capacitors ESR (ESR ripple) as well as the stored charge (capacitive ripple). When considering total ripple, both should be considered.

$$V_{RIPPLE,ESR} = \Delta I_L \times ESR$$

$$V_{RIPPLE,CAP} = \frac{\Delta I_L}{8 \times C_{OUT} \times f_{SW}}$$

Consider a typical application with ΔI_L = 2.66A using three 22µF ceramic capacitors, each with an ESR of ~6mΩ for parallel total of 66µF and 2mΩ ESR.

$$V_{RIPPLE,ESR} = 2.66A \times 2m\Omega = 5.32mV$$

$$V_{RIPPLE,CAP} = \frac{2.66A}{8 \times 66\mu F \times 600kHz} = 8.40mV$$

Total ripple = 13.72mV. The actual capacitive ripple may be higher than calculated value because the capacitance decreases with the voltage on the capacitor.

Using a 150µF 40mΩ POS cap, the above result is

$$V_{RIPPLE,ESR} = 2.66A \times 40m\Omega = 106.40mV$$

$$V_{RIPPLE,CAP} = \frac{2.66A}{8 \times 150\mu F \times 600kHz} = 3.69mV$$

Total ripple = 110.09mV

Output Transient Undershoot/Overshoot

If very fast load transient must be supported, consider the effect of the output capacitor on the output transient undershoot and overshoot. Instant-PWM responds quickly to changing load conditions, however, some considerations must be needed, especially when using small ceramic capacitors which have low capacitance at low output voltages which results in insufficient stored energy for load transient. Output transient undershoot and overshoot have two causes: voltage changes caused by the ESR of the output capacitor and voltage changes caused by the output capacitance and inductor current slew rate.

ESR undershoot or overshoot may be calculated as $V_{ESR} = \Delta I_{OUT} \times ESR$. Using the ceramic capacitor example above and a fast load transient of ± 4A, V_{ESR} = ± 4A × 2mΩ = ± 8mV. The POS capacitor result with the same load transient, V_{ESR} = ± 4A × 40mΩ = ± 160mV.

Capacitive undershoot (load increasing) is a function of the output capacitance, the load step, the inductor value and the input-output voltage difference and the maximum duty factor. During a fast load transient, the maximum duty factor of instant-PWM is a function of t_{ON} and the minimum t_{OFF} as the control

Silergy Corp. Confidential Prepared For 0900038_TWDIVA

© 2021 Silergy Corp. All Rights Reserved.

scheme is designed to rapidly ramp the inductor current by grouping together many t_{ON} pulses in this case. The maximum duty factor D_{MAX} may be calculated by

$$D_{MAX} = \frac{t_{ON}}{t_{ON} + t_{OFF,MIN}}$$

Given this, the capacitive undershoot may be calculated by

$$V_{UNDERSHOOT,CAP} = -\frac{L_1 \times \Delta I_{OUT}^2}{2 \times C_{OUT} \times (V_{IN,MIN} \times D_{MAX} - V_{OUT})}$$

Consider a 4A load increase using the ceramic capacitor case when V_{IN} = 12V.At V_{OUT} = 3.3V, the result is t_{ON} = 458ns, $t_{OFF,MIN}$ = 150ns, D_{MAX} = 458 / (458 + 150) = 0.753 and

$$V_{UNDERSHOOT,CAP} = -\frac{1.5\mu H \times (4A)^2}{2 \times 66\mu F \times (12V \times 0.753 - 3.3V)} = -31.7mV$$

Using the POS capacitor case, the above result is

$$V_{UNDERSHOOT,CAP} = -\frac{1.5\mu H \times (4A)^2}{2 \times 150\mu F \times (12V \times 0.753 - 3.3V)} = -13.95mV$$

Capacitive overshoot (load decreasing) is a function of the output capacitance, the inductor value and the output voltage.

$$V_{OVERSHOOT,CAP} = \frac{L_1 \times \Delta I_{OUT}^2}{2 \times C_{OUT} \times V_{OUT}}$$

Consider a 4A load decrease using the ceramic capacitor case above. At V_{OUT} = 3.3V the result is

$$V_{OVERSHOOT,CAP} = \frac{1.5\mu H \times (4A)^2}{2 \times 66\mu F \times 3.3V} = 55.1mV$$

Using the POS capacitor case, the above result is

$$V_{OVERSHOOT,CAP} = \frac{1.5\mu H \times (4A)^2}{2 \times 150\mu F \times 3.3V} = 24.2mV$$

Combine the ESR and capacitive undershoot and overshoot to calculate the total overshoot and undershoot for a given application.

Load Transient Considerations:

The SY8388A adopts the instant PWM architecture to achieve good stability and fast transient responses. In applications with high step load current, adding an RC feed-forward compensation network R_{FF} and C_{FF} may further speed up the load transient responses. R_{FF} = 1kΩ and C_{FF} = 220pF have been shown to perform well in most applications. Increase C_{FF} will speed up the load transient response if there is no stability issue.

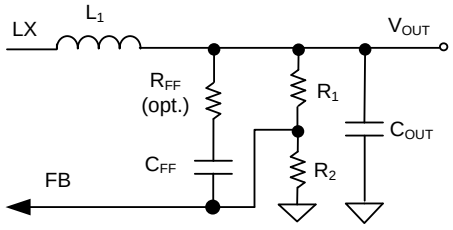

Note that when C_{OUT} > 500μF and minimum load current is low, set feed-forward values as R_{FF} = 1kΩ and C_{FF} = 2.2nF to provide sufficient ripple to FB for small output ripple and good transient behavior.

Thermal Design Considerations

Maximum power dissipation depends on the thermal resistance of the IC package, the PCB layout, the surrounding airflow, and the difference between the junction and ambient temperatures. The maximum power dissipation may be calculated by:

$P_{D,MAX} = (T_{J,MAX} - T_A) / \theta_{JA}$

Where, $T_{J,MAX}$ is the maximum junction temperature, T_A is the ambient temperature, and θ_{JA} is the junction to ambient thermal resistance.

To comply with the recommended operating conditions, the maximum junction temperature is 125°C. The junction to ambient thermal resistance θ_{JA} is layout dependent. For the QFN2.5×2.5-16 package the thermal resistance θ_{JA} is 33°C/W when measured on a standard Silergy four-layer thermal test board. These standard thermal test layouts have a very large area with long 2-oz. copper traces connected to each IC pin and very large, unbroken 1-oz. internal power and ground planes.

Meeting the performance of the standard thermal test board in a typical tiny evaluation board area requires wide copper traces well-connected to the IC's backside pads leading to exposed copper areas on the component side of the board as well as good thermal via from the exposed pad connecting to a wide middle-layer ground plane and, perhaps, to an exposed copper area on the board's solder side.

The maximum power dissipation at T_A=25°C may be calculated by the following formula:

$P_{D,MAX}$ = (125°C − 25°C) / (33°C/W) = 3W

The maximum power dissipation depends on operating ambient temperature for fixed $T_{J,MAX}$ and thermal resistance θ_{JA}. Use the derating curve in figure below to calculate the effect of rising ambient temperature on the maximum power dissipation.

Silergy Corp. Confidential Prepared For D00038_TWDIVA

© 2021 Silergy Corp. All Rights Reserved.

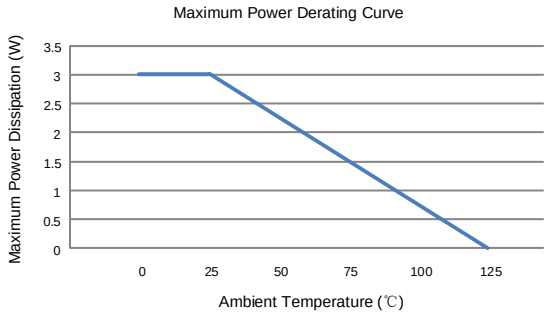

Layout Design

Follow these PCB layout guidelines for optimal performance and thermal dissipation.

Input Capacitors: Place the input capacitor very near IN and GND, minimizing the loop formed by these connections. And the input capacitor should be connected to the IN and GND by wide copper plane. A 0.1μF input ceramic capacitor is recommended to reduce the input noise.

Output Capacitors: Guarantee the C_{OUT} negative sides are connected with GND pin by wide copper traces instead of vias, in order to achieve better accuracy and stability of output voltage.

VCC Capacitor: Place the VCC capacitor close to VCC using short, direct copper trace to one nearest device GND pin (pin 14).

BYP Capacitor: Place the BYP capacitor close to BYP using short, direct copper trace to one nearest device GND pin (pin 14) if bypass function is used.

Feedback Network: Place the feedback components (R_1, R_2, R_{FF} and C_{FF}) as close to FB pin as possible. Avoid routing the feedback line near LX, BS or other high frequency signal as it is noise sensitive. Make the feedback sampling point Kelvin connect with C_{OUT} rather than the inductor output terminal.

LX Connection: Keep LX area small to prevent excessive EMI, while providing wide copper traces to minimize parasitic resistance and inductance. Wide LX copper trace between pin 5 and pin 15, 16 should be adopted to improve efficiency.

BS Capacitor: Place the BS capacitor on the same layer as the device, keep the BS voltage path (BS, LX and C_{BS}) as short as possible.

Control Signals: It is not recommended to connect control signals and IN directly. A resistor in a range of 1kΩ to 1MΩ should be used if they are pulled high by IN.

GND Vias: Place adequate number of vias on the GND layer around the device for better thermal performance. The exposed GND pad should be connected by a larger copper area than its size, place four GND vias on it for heat dissipation.

PCB Board: A four-layer layout with 2-oz copper is strongly recommended to achieve better thermal performance. The top layer and bottom layer should place power IN and GND copper plane as wide as possible. Middle1 layer should place all GND layer for conducting heat and shielding middle2 layer signal line from top layer crosstalk. Place signal lines on middle2 layer instead of the other layers, so that the other layers' GND plane not be cut apart by these signal lines.

Silergy Corp. Confidential Prepared For 1000386_NVIDIA

© 2021 Silergy Corp. All Rights Reserved.

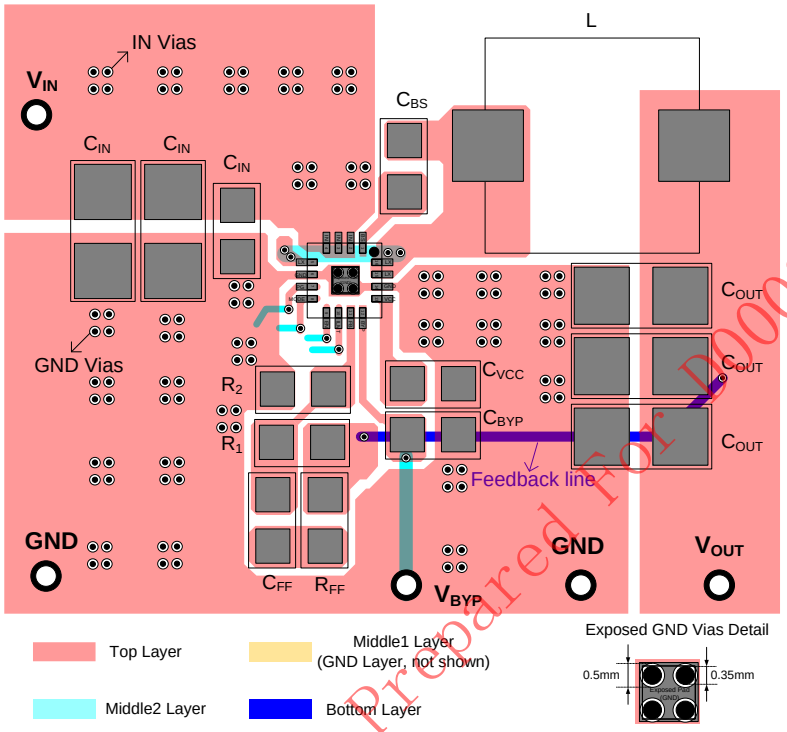

Figure4. PCB Layout Suggestion

Silergy Corp. Confidential Prepared for D00038_TWDIVA

© 2021 Silergy Corp. All Rights Reserved.

QFN2.5×2.5-16 Package Outline Drawing

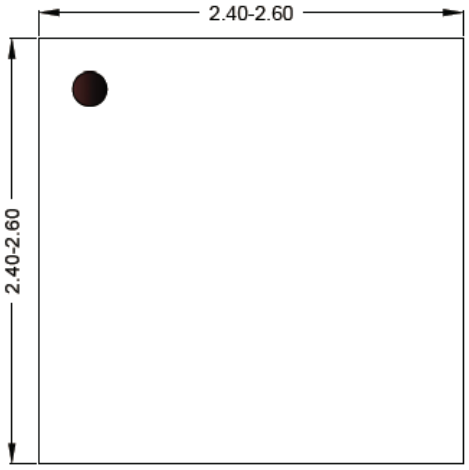

Top view



Bottom view



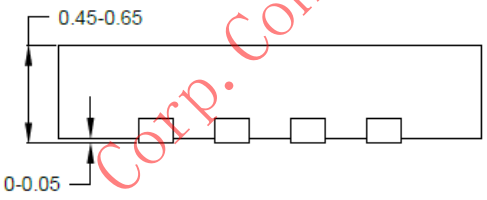

Side view

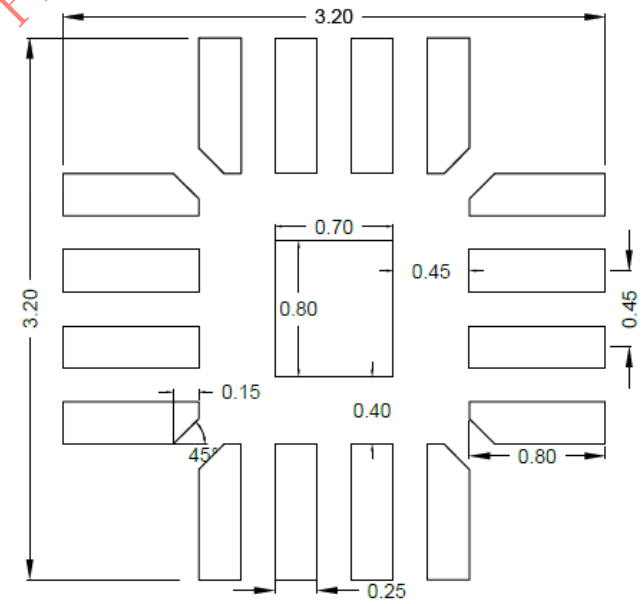

Recommended PCB layout

(Reference only)

Notes: **All dimension in millimeter and exclude mold flash & metal burr.**

Silergy Corp. Confidential Prepared For D00038_TWDIVA

© 2021 Silergy Corp. All Rights Reserved.

Taping & Reel Specification

1. QFN2.5×2.5 taping orientation

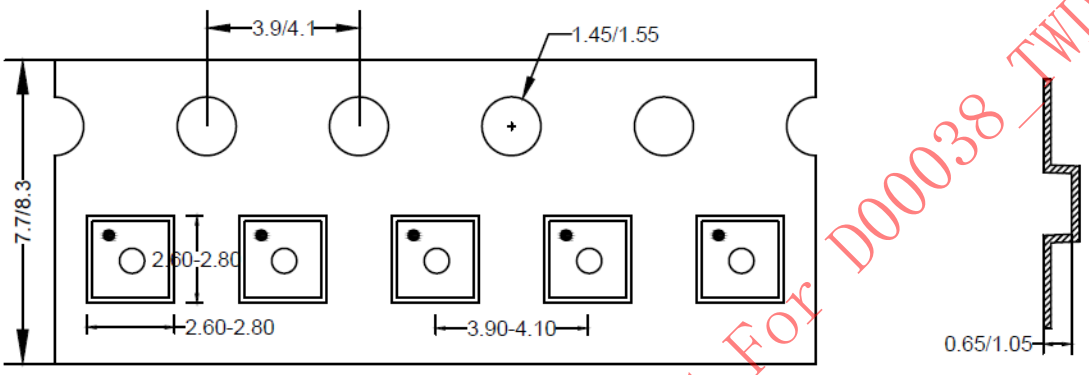

2. Carrier Tape & Reel specification for packages

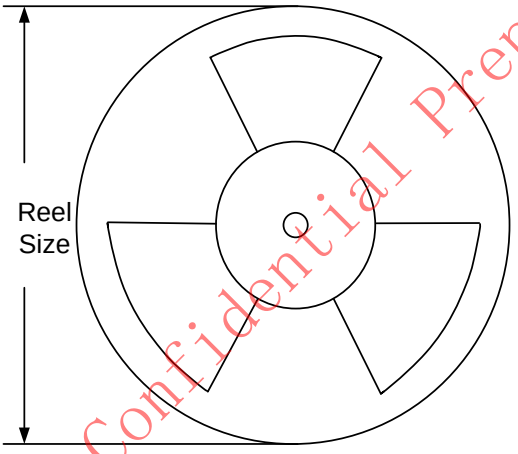

Package types	Tape width (mm)	Pocket pitch(mm)	Reel size (Inch)	Trailer length(mm)	Leader length (mm)	Qty per reel
QFN2.5×2.5	8	4	7"	400	160	3000

3. Others: NA

Silergy Corp. Confidential Prepared For D00038_TWDIVA

© 2021 Silergy Corp. All Rights Reserved.

Revision History

The revision history provided is for informational purpose only and is believed to be accurate, however, not warranted. Please make sure that you have the latest revision.

Date	Revision	Change
Jul.24, 2021	Revision 1.0	Initial Production Release
Jan.22, 2021	Revision 0.9A	1. Add (IN-LX) voltage in Absolute Maximum Ratings; 2. Add "A 0.1μF input ceramic capacitor is recommended to reduce the input noise." in the pin description and the layout design; 3. Update in Table1 (page14): ----Change "Pull ILMT to GNG by 0~20kΩ" to "Pull ILMT to GND by ≤10kΩ Resistor" (ILMT=Low); ---- Change "Pull ILMT to VCC by 0~150kΩ" to "Pull ILMT to VCC by ≤10kΩ Resistor" (ILMT=High).
Sep.21, 2020	Revision 0.9A	Fixed an error in the calculation formula of D_{MAX} (t_{ON} is 458ns) (page17)
Jul.24, 2020	Revision 0.9	Initial Release

Silergy Corp. Confidential Prepared For D000038_TWDIVA

© 2021 Silergy Corp. All Rights Reserved.

IMPORTANT NOTICE

1. **Right to make changes.** Silergy and its subsidiaries (hereafter Silergy) reserve the right to change any information published in this document, including but not limited to circuitry, specification and/or product design, manufacturing or descriptions, at any time and without notice. This document supersedes and replaces all information supplied prior to the publication hereof. Buyers should obtain the latest relevant information before placing orders and should verify that such information is current and complete. All semiconductor products are sold subject to Silergy's standard terms and conditions of sale.

2. Applications. Application examples that are described herein for any of these products are for illustrative purposes only. Silergy makes no representation or warranty that such applications will be suitable for the specified use without further testing or modification. Buyers are responsible for the design and operation of their applications and products using Silergy products. Silergy or its subsidiaries assume no liability for any application assistance or designs of customer products. It is customer's sole responsibility to determine whether the Silergy product is suitable and fit for the customer's applications and products planned. To minimize the risks associated with customer's products and applications, customer should provide adequate design and operating safeguards. Customer represents and agrees that it has all the necessary expertise to create and implement safeguards which anticipate dangerous consequences of failures, monitor failures and their consequences, lessen the likelihood of failures that might cause harm and take appropriate remedial actions. Silergy assumes no liability related to any default, damage, costs or problem in the customer's applications or products, or the application or use by customer's third-party buyers. Customer will fully indemnify Silergy, its subsidiaries, and their representatives against any damages arising out of the use of any Silergy components in safety-critical applications. It is also buyers' sole responsibility to warrant and guarantee that any intellectual property rights of a third party are not infringed upon when integrating Silergy products into any application. Silergy assumes no responsibility for any said applications or for any use of any circuitry other than circuitry entirely embodied in a Silergy product.

3. **Limited warranty and liability.** Information furnished by Silergy in this document is believed to be accurate and reliable. However, Silergy makes no representation or warranty, expressed or implied, as to the accuracy or completeness of such information and shall have no liability for the consequences of use of such information. In no event shall Silergy be liable for any indirect, incidental, punitive, special or consequential damages, including but not limited to lost profits, lost savings, business interruption, costs related to the removal or replacement of any products or rework charges, whether or not such damages are based on tort or negligence, warranty, breach of contract or any other legal theory. Notwithstanding any damages that customer might incur for any reason whatsoever, Silergy' aggregate and cumulative liability towards customer for the products described herein shall be limited in accordance with the Standard Terms and Conditions of Sale of Silergy.

4. **Suitability for use.** Customer acknowledges and agrees that it is solely responsible for compliance with all legal, regulatory and safety-related requirements concerning its products, and any use of Silergy components in its applications, notwithstanding any applications-related information or support that may be provided by Silergy. Silergy products are not designed, authorized or warranted to be suitable for use in life support, life-critical or safety-critical systems or equipment, nor in applications where failure or malfunction of an Silergy product can reasonably be expected to result in personal injury, death or severe property or environmental damage. Silergy assumes no liability for inclusion and/or use of Silergy products in such equipment or applications and therefore such inclusion and/or use is at the customer's own risk.

5. **Terms and conditions of commercial sale**. Silergy products are sold subject to the standard terms and conditions of commercial sale, as published at http://www.silergy.com/stdterms, unless otherwise agreed in a valid written individual agreement specifically agreed to in writing by an authorized officer of Silergy. In case an individual agreement is concluded only the terms and conditions of the respective agreement shall apply. Silergy hereby expressly objects to and denies the application of any customer's general terms and conditions with regard to the purchase of Silergy products by the customer.

6. **No offer to sell or license**. Nothing in this document may be interpreted or construed as an offer to sell products that is open for acceptance or the grant, conveyance or implication of any license under any copyrights, patents or other industrial or intellectual property rights. Silergy makes no representation or warranty that any license, either express or implied, is granted under any patent right, copyright, mask work right, or other intellectual property right. Information published by Silergy regarding third-party products or services does not constitute a license to use such products or services or a warranty or endorsement thereof. Use of such information may require a license from a third party under the patents or other intellectual property of the third party, or a license from Silergy under the patents or other intellectual property of Silergy.

For more information, please visit: www.silergy.com

© 2020 Silergy Corp. **All Rights Reserved.**

Silergy Corp Confidential Prepared for D000358_TWDVA

© 2021 Silergy Corp. All Rights Reserved.