PRODUCT ENGINEERING SPECIFICATION
FOR
12.1” LCD MONITOR
(PROPRIETARY DOCUMENT)

CUSTOMER PRODUCT NAME : 8771120-71

DIVA PRODUCT NAME : RGD1252AM
RGD1252AM USA

DIVA PRODUCT No.: 5A3A1223Q205603
1A3A1223Q205602 (USA)

REV. F

CUSTOMER APPROVAL

APPROVED BY	DATE	NOTES

DIVA APPROVAL

APPROVED BY	PL	RD	PM
	Daniel Su	Michael Young	Ryan Wang
DATE	2026/04/22	2026/04/22	2026/04/22

TABLE OF CONTENTS

1. SCOPE 4
2. SPECIFICATION OVERVIEW 4
3. ELECTRICAL DESCRIPTION 5
3.1 System Block Diagram 5
3.2 Interface Connector 5
3.2.1 HDMI 19pin Connector Pin Assignment 5
3.2.2 Display Port 20pin Connector Pin Assignment 6
3.2.3 USB Connector Pin Assignment 6
4. MECHANICAL DESCRIPTION 7
4.1 Front View 7
4.2 Rear View 7
5. USER CONTROL AND INDICATOR 8
5.1 OSD Function 8
5.2 OSD Information 8
5.3 Color Temp 8
5.4 Controls 9
6. DISPLAY TIMING 9
7. ACCESSORY 9
8. DRAWING 10
8.1 Outline Drawing 10
8.2 Model Label 11
8.3 Carton Label 12
8.4 Carton Artwork 13
8.5 Packing List 14
8.6 Pallet Loading 15
9. APPENDIX 16
9.1 Critical and Non-Critical Component List 16
9.2 WARRANTY 17
9.3 Panel IIS SPEC 18

REVISION HISTORY

REV.	SHEET	DESCRIPTION	RELEASED BY	DATE
A	All	Initial	Victor, Annie , Kate ,Jane, Sam	2019/03/11
A.1	8.11~14.18	P8 5.3 Color Temp Change Luminance ≧ 200 nits。 P11~14 Update Artwork Drawing P18 9.3 Panel IIS Spec Update	Jane, Daniel	2019/03/25
B	7.9.10	P7 4.2 Rear View Drawing Modify. P9 5.4 Controls Drawing Modify. P10 8.1 Outline Drawing Modify.	Kate	2019/05/09
B.1	4.9.10	P4 2.Monitor Unit Delete Power Saving. P9 5.4 Controls Drawing Modify. P10 8.1 Outline Drawing Modify.	Daniel	2019/05/16
B.2	4.8.9	P4 2.Monitor Unit Delete Power Off. T/P Input Mode-> 5 Finger. Surface Treatment Item Delete. Storage Temp Change -40 to 60. Operating&Storage Pressure Add Metre unit. Surface Item Delete. P8 5.1 Power On/off Delete.(All Item Change 5.x) 5.2 Luminance Change 200 ± 20 nits. P9 6. Display Timing DVI-D Change HDMI.	Daniel	2019/05/24
B.3	8.9.11	P8 5.2 Add OSD information(All Item Change 5.x). P9 5.4 OSD Controls Modify. P11 8.2 Model Label Update.	Yanger Daniel Jane	2019/06/12
B.4	4.5.6.11.12	P4 2. SPECOFOCATION Modify P5~P6 3.2 Pin Name Modify P11~P12 8.2 Model Label & 8.3 Carton Label Update	Daniel ,Jane	2019/06/28
C	11	ADD RGD1252AM DRU Model P11 8.2 Model Label Update.(GSL Code)	Daniel, Jane	2019/07/12
C.1	1	P1 <MP>Add Product No.: 1A3A1223Q205600	Daniel	2019/11/18
D	11.12	P11 8.2 Model Label Update (Rev.3->4) P12 8.3 Catron Label Update (Rev.3->4)	Alicia	2020/06/05
D.1	11.12	P11 8.2 Model Label Update (Made in Taiwan,China) P12 8.3 Catron Label Update(Made in Taiwan,China)	Alicia	2020/08/09
E	1.11.12.14	P1 Add Product No.: 1A3A1223Q205602 P11 Add 8.2 Model Label Update (Made in Taiwan) P12 Add 8.3 Catron Label Update(Made in Taiwan) P14 Packing List Update	Killy	2025/05/16
F	1.11.12	AUO Pane G121EAT02.0 Rev V0.10 -> V0.12 P1 Delete1A3A1223Q205600(China) is EOL. P11 8.2 Model Label Update (Rev.4->5) P12 8.3 Catron Label Update (Rev.4->5)	Daniel, Lyn	2026/04/22

1. SCOPE

The intent of this document is to specify the engineering specification which includes: Electrical specification Mechanical Drawing, User OSD control, Display Timing, and Packing accessories for Model No. : RGD1252AM 12.1" Color TFT LCD monitor. Product shall meet RoHS and China RoHS directive.

2. SPECIFICATION OVERVIEW

ITEM		SPEC	UNIT
LCD PANEL & TOUCH	Model	AUO G121EAT02.0	
	Active Area (H:V)	261.12 (H) x 163.2 (V)	mm
	Viewing Angle (Typ.) (H/V)	178/178 (CR=10)	°
	Brightness (Typ.)	350(Typ.) / 290(Min.)	cd/m^2
	Contrast Ratio (Typ.)	1000 :1 (Typ.) / 800:1 (Min.)	
	Response Time	25 (Typ.)	msec
	Pixel Number	1280 (x3) x 800	pixel
	Pixel Pitch (H:V)	0.204 x 0.204	mm
	Display Color	16.2M colors (8bits RGB)	color
	Backlight Lamp Life	50,000	hour
	T/P Type	PCAP (Clear Type)	
	T/P Input Mode	5 Finger	
	T/P Interface	USB type-B	
DRIVER BD	Scaler	RTD2486TD (REALTEK)	
	Input horizontal timing range	30k-85k	Hz
	Input vertical timing range	50-80	Hz
INPUT SIGNAL	HDMI	HDMI 19Pinx 1 (1.4a)	
	DP	Display Port 20Pin x 1 (1.2a)	
OUT SIGNAL	USB	USB type-A x 1	
MONITOR UNIT	Rating	12Vdc,1.4A	
	Power Consumption (Max)	Full Brightness: 15 No Signal: 10	W
MECHANICAL	Dimension (Unpacked) (W x H x D)	295 x 203.5 x 50	mm
	Dimension (Packed) (W x H x D)	402 x 315x 185	mm
	Weight (Unpacked)	2.1	kg
	Weight (Packed)	2.8	kg
	Housing Color	N/A	
	Housing Material	AL	
	VESA Mounting Standard	100 x 100	
ENVIRONMENTAL CONDITION	Operating Temp.	0 to 40	° C
	Storage Temp.	-40 to 60	° C
	Operating Humidity	30 to 75	% RH
	Storage Humidity	10 to 90	
	Operating Pressure	700 to 1060 (0 to 3000)	hPa (M)

	Storage Pressure	500 to 1060 (0 to 5500)	Hpa (M)
	Surface	50 max	° C
	MTBF (Parts Stress)	More than 50,000 hours	Hour
COMPLIANCE	N/A	N/A	

3. ELECTRICAL DESCRIPTION

3.1 System Block Diagram

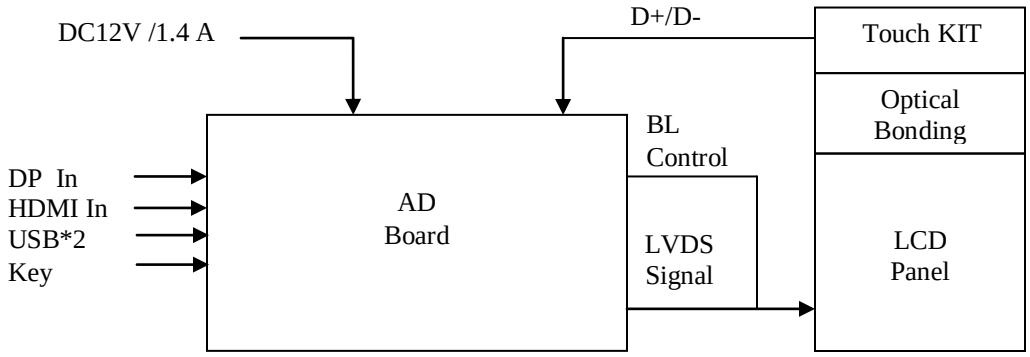

3.2 Interface Connector

3.2.1 HDMI 19pin Connector Pin Assignment

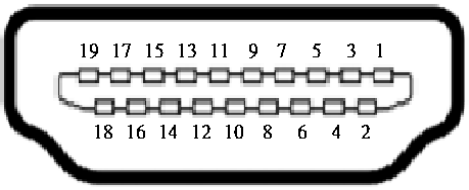

Pin No.	Signal Assignment	Pin No.	Signal Assignment
1	TMDS Data2+	11	TMDS Clock Shield
2	TMDS Data2 Shield	12	TMDS Clock–
3	TMDS Data2–	13	CEC
4	TMDS Data1+	14	Reserved (N.C. on device)
5	TMDS Data1 Shield	15	SCL
6	TMDS Data1–	16	SDA
7	TMDS Data0+	17	DDC/CEC Ground
8	TMDS Data0 Shield	18	+5V Power
9	TMDS Data0–	19	Hot Plug Detect
10	TMDS Clock+		

3.2.2 Display Port 20pin Connector Pin Assignment

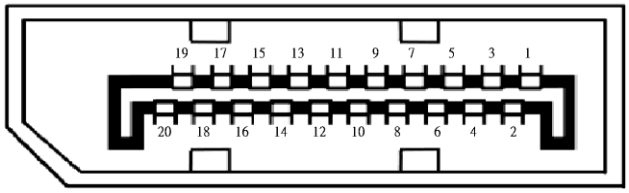

Pin No.	Signal Assignment	Pin No.	Signal Assignment
1	ML_Lane 0 (p)	11	GND
2	GND	12	ML_Lane 3 (n)
3	ML_Lane 0 (n)	13	GND
4	ML_Lane 1 (p)	14	GND
5	GND	15	AUX CH (p)
6	ML_Lane 1 (n)	16	GND
7	ML_Lane 2 (p)	17	AUX CH (n)
8	GND	18	Hot plug
9	ML_Lane 2 (n)	19	Return
10	ML_Lane 3 (p)	20	DP_PWR

3.2.3 USB Connector Pin Assignment

Type B

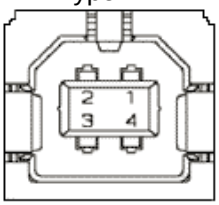

Type A

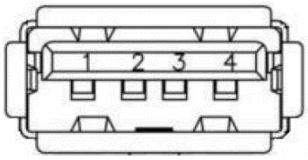

Pin No.	Signal Assignment	Pin No.	Signal Assignment
1	VBUS	3	D+
2	D-	4	GND

4. MECHANICAL DESCRIPTION

4.1 Front View

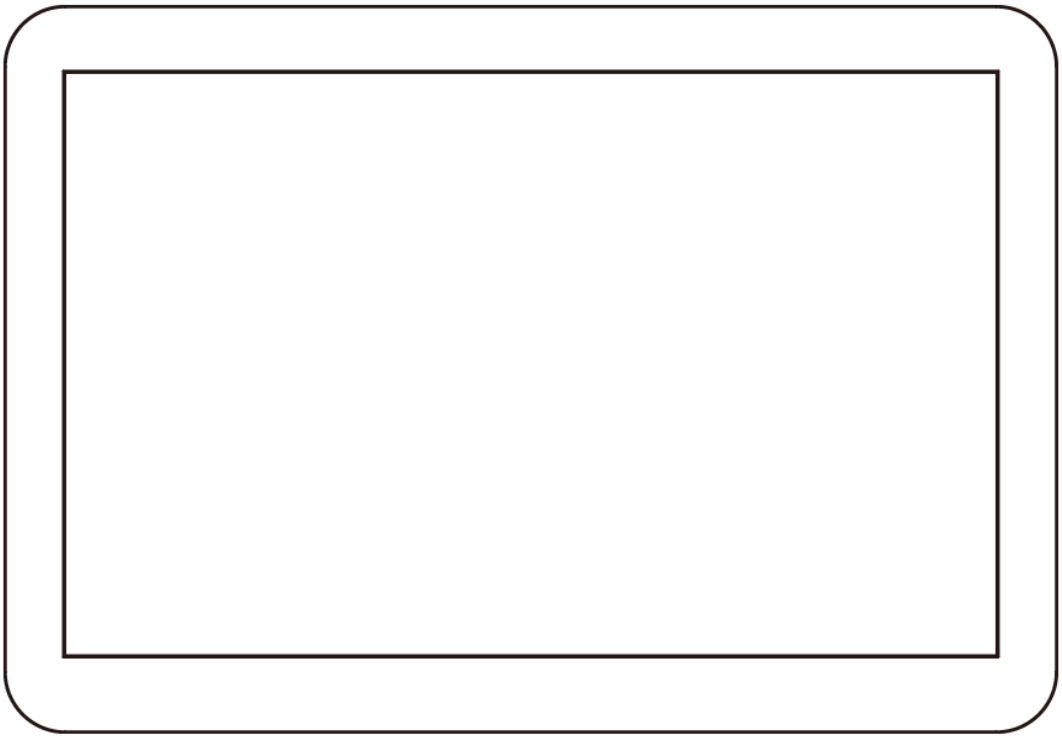

4.2 Rear View

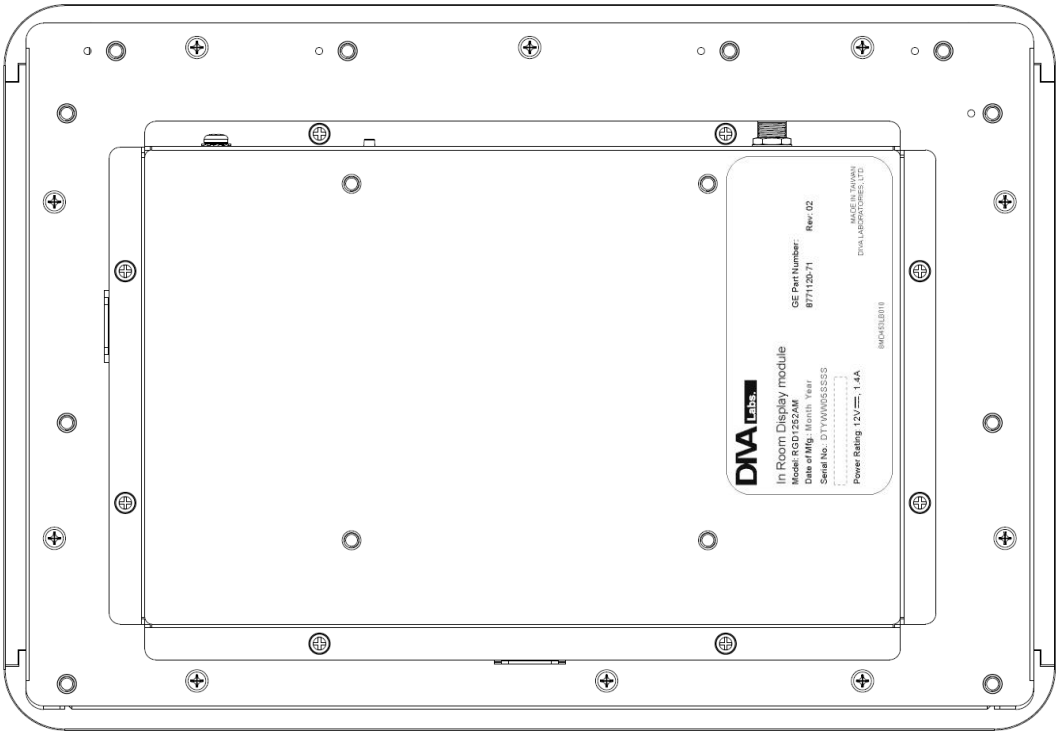

5. USER CONTROL AND INDICATOR

5.1 OSD Function

An On-Screen Display system shall be used, controlled by a Menu touch key, knob or Menu button.
OSD function operation only enable on factory mode.

LEVEL 1	LEVEL 2	LEVEL 3	LEVEL 4
Exit			
Brightness	Brightness bar		
Management	Exit		
	OSD Display	Exit	
		OSD H. Position	
		OSD V. Position	
	Language	Exit	
		English	
		Francais	
		Deutsch	
		Italiano	
		Español	
		ニホンゴ	
		簡中	
	Source	Exit	
		Auto Source	On / Off
		HDMI	
		Displayport	
	Recall	Yes / No	
	Watch Dog		
Operation Hours			

5.2 OSD Information

An On-Screen Display system shall be used, display by hold on Menu key 2'sec.

Manufacture Name:
Brightness Value:
Part Number:
SN:
Display Rev:
Manufacture Data:
Firmware Rev:
User hours:
Input interface:
Resolution:

5.3 Color Temp

Default	Color Temp	Value			
○	Panel default	x= 0.313	±0.005	y= 0.329	±0.005

*GE Spec Default: 6500K ± 300K。
*OSD Brightness Default Setup 50: Panel Luminance 200 ± 20 nits。

5.4 Controls

Press 3 sec for power ON/OFF on no signal;
When pressed, Brightness will increase.

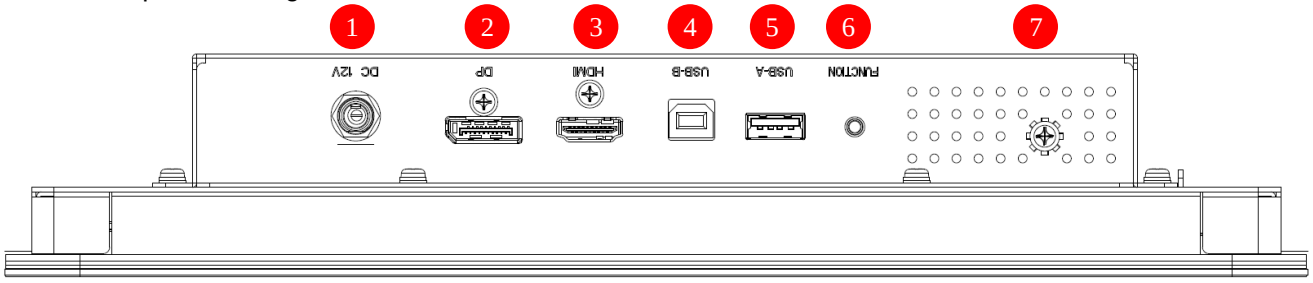

No	Name	Connection Type	Remarks
1	DC 12V	Power Din-2pin(2.5Ø)	DC 12V input.
2	DP	DisplayPort	DisplayPort signal input
3	HDMI	HDMI	HDMI signal input
4	USB-B	USB type-B	Touch screen signal output port
5	USB-A	USB type-A	USB downstream port. Connect to USB device
6	Function	Tact Switch Key	OSD Control
7	GND Post	Ground Screw	Connect to the system to earth ground

6. DISPLAY TIMING

◎: Recommended timing O: Applied timing

Resolution	Pixel-rate [MHz]	Line-rate [kHz]	Frame-rate [Hz]	HDMI	DP
640x480	25.200	31.500	60.000	O	O
640x480	31.500	37.861	72.809	O	O
640x480	31.500	37.500	75.000	-	-
720x400	28.322	31.469	70.087	-	-
800x600	36.000	35.156	56.250	-	-
800x600	40.000	37.879	60.317	O	O
800x600	50.000	48.077	72.188	-	-
800x600	49.500	46.875	75.000	-	-
1024x768	65.000	48.363	60.004	O	O
1024x768	75.000	56.476	70.069	-	-
1024x768	78.750	60.023	75.029	-	-
1280x800	83.500	49.702	59.810	◎	◎

7. ACCESSORY

N/A

8. Drawing

8.1 Outline Drawing

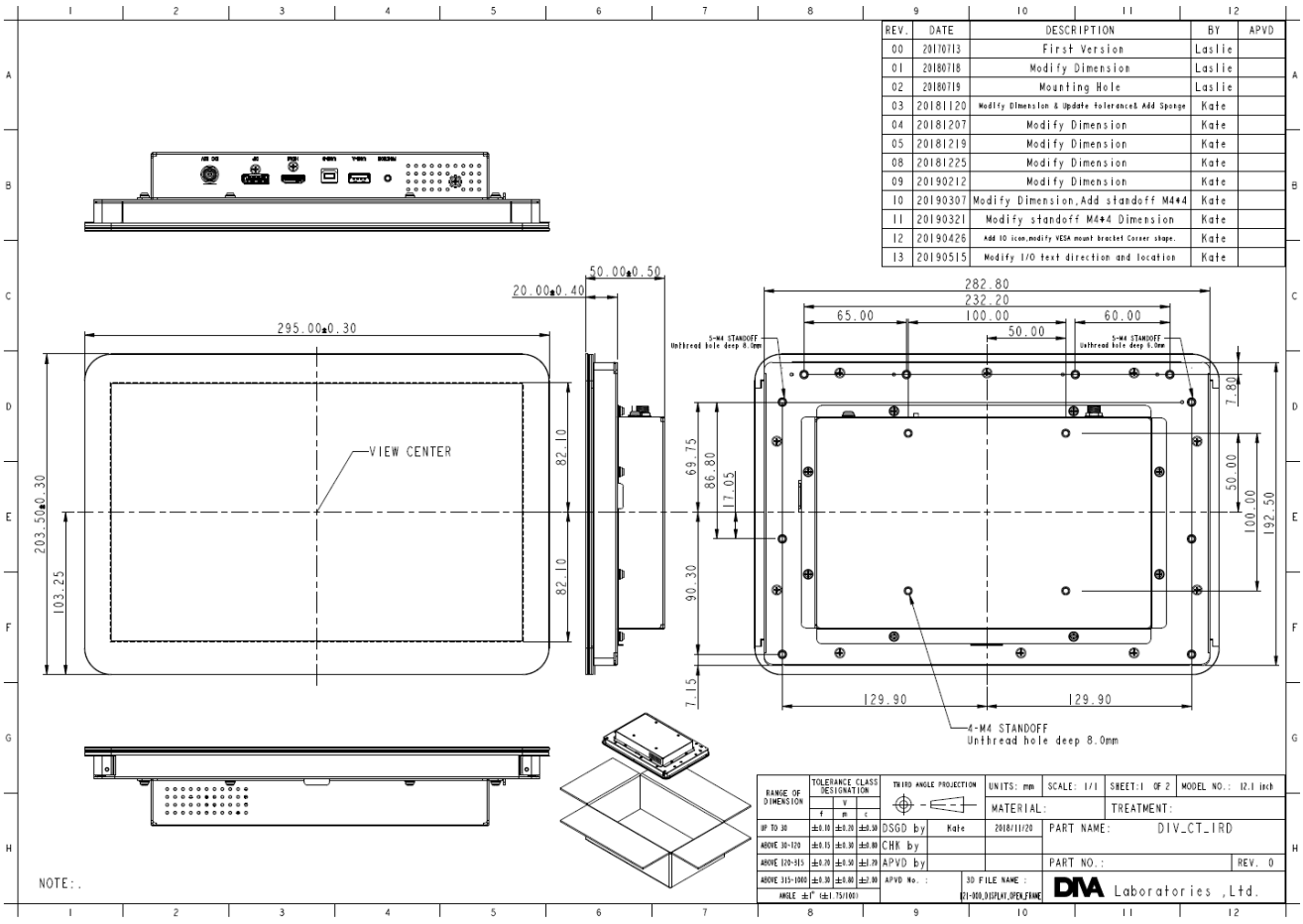

8.2 Model Label

REV.	DATE	DESCRIPTION	BY	APVD
0	20250512	1. 因關稅修改Made in Taiwan, China的則移除, China 2.料號更新	Killy	
A	20260319	Update Part Rev.04 to Rev.05 料號進階	Lyn	
B	20260417	Update FW Rev.:200526R0V01 to 260417R0V01 料號進階	Lyn	

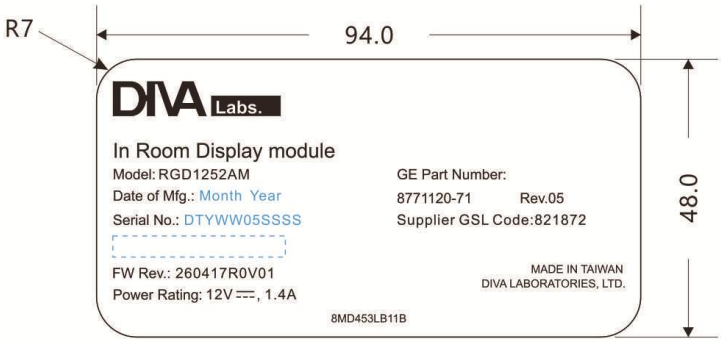

Notes:
1. Use 3MDL4XLB650 blank label.
2. Meet UL second printing standard.
   Only use PGJI2 printed label
   Ricoh #B110C ribbon.
3. Please use the letters after the underline of FW file name for FW rev.
   EX: If the FW file name is "RGD1252AM_190510R0V01",
   FW rev. is "190510R0V01".

PM / SALES 2026/4/20 Ryan Wang	THIRD ANGLE PROJECTION	UNITS: mm	SCALE: 1/1	SHEET: 1/1	MODEL NO.: RGD1252AM DRU RGD1252AM USA	
		MATERIAL: SEE NOTES		TREATMENT: SEE NOTES		
PE / PCD	DSGD by	Lyn	2026/04/17	PART NAME: MODEL LABEL		
John 0422 0840 Joanne 0422 1035	APVD by			PART NO.: 8MD453LB11B		VER.B
SAFETY 0421 1700	APVD NO.:	FILE NAME: RGD1252AM DRU RGD1252AM USA .cdr		DIVA Laboratories,Ltd.		

8.3 Carton Label

REV.	DATE	DESCRIPTION	BY	APVD
0	20250512	1. 因關稅修改Made in Taiwan, China的則移除, China 2.料號更新	Killy	
A	20260319	Update Part Rev.04 to Rev.05 料號進階	Lyn	

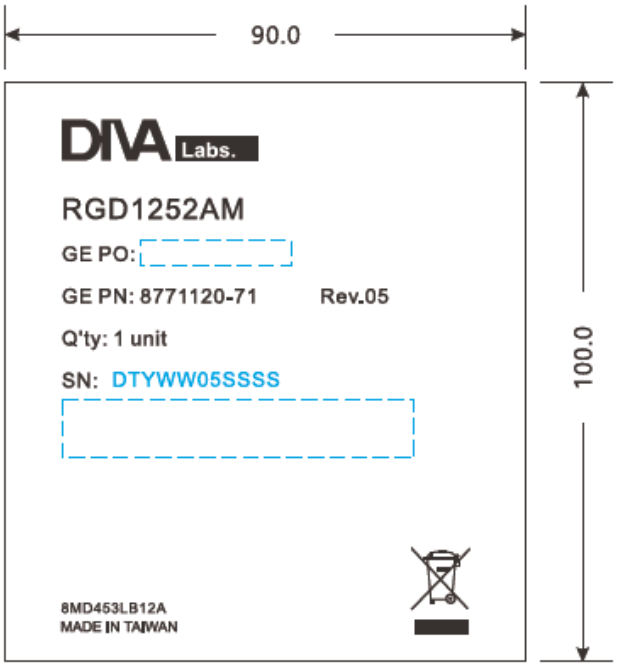

PO號碼由成品倉負責填入

Note:
1.Use 3MDL4XLB440 Blank label.
2.Use Ricoh #B110A ribbon.

PM / SALES: 2026/3/30 Ryan Wang	THIRD ANGLE PROJECTION	UNITS: mm	SCALE: 1/1	SHEET: 1/1	MODEL NO.: RGD1252AM DRU / RGD1252AM USA
		MATERIAL: SEE NOTES		TREATMENT: SEE NOTES	
PE / PCD: John 0331 0845 Joanne 0331 1050	DSGD by: Lyn	2026/03/19	PART NAME: CARTON LABEL		
SAFETY: 0330 1630	APVD by:		PART NO.: 8MD453LB12A		VER.A
	APVD NO.:	FILE NAME: RGD1252AM DRU RGD1252AM USA .cdr	DIVA Laboratories,Ltd.		

8.4 Carton Artwork

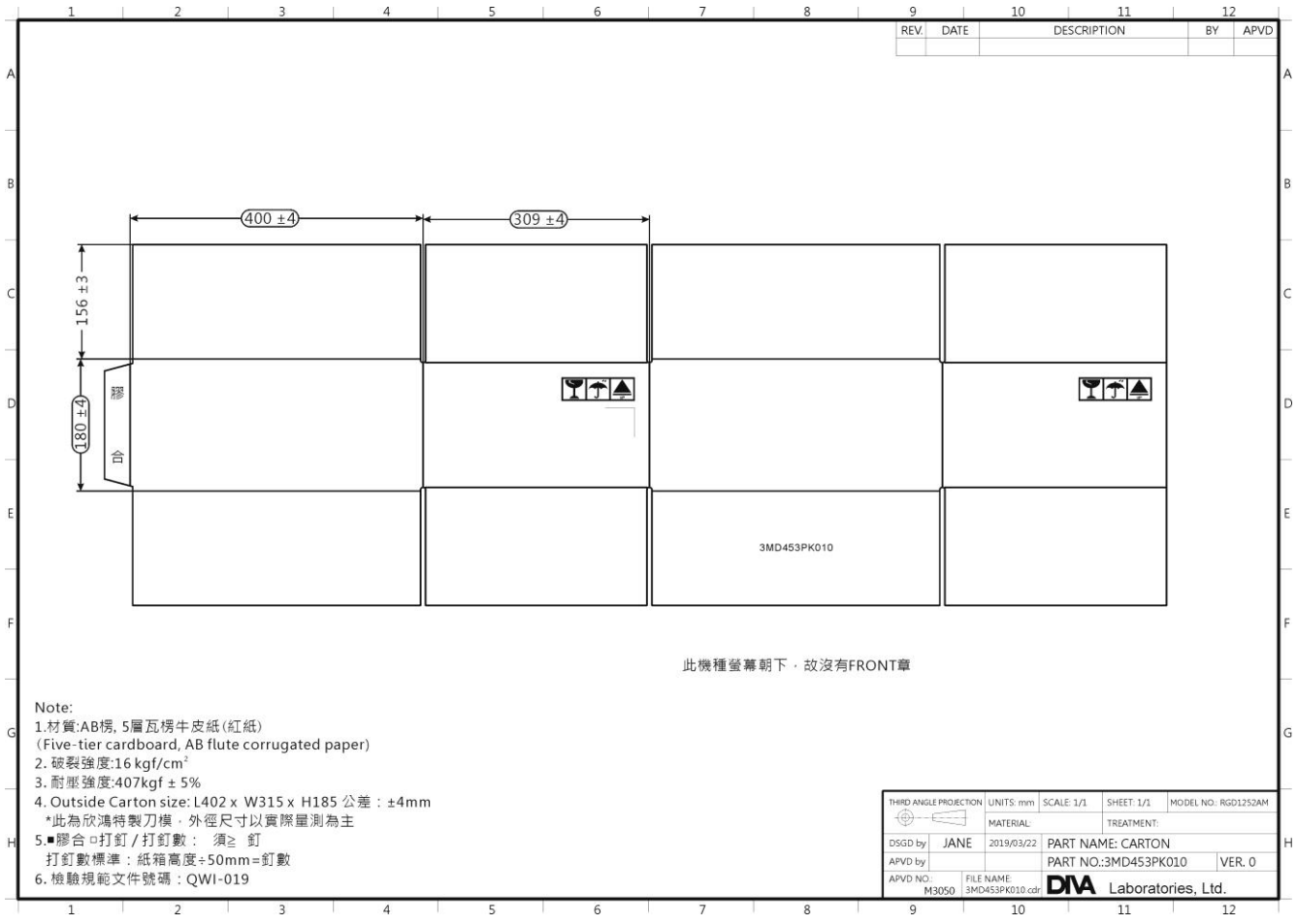

8.5 Packing List

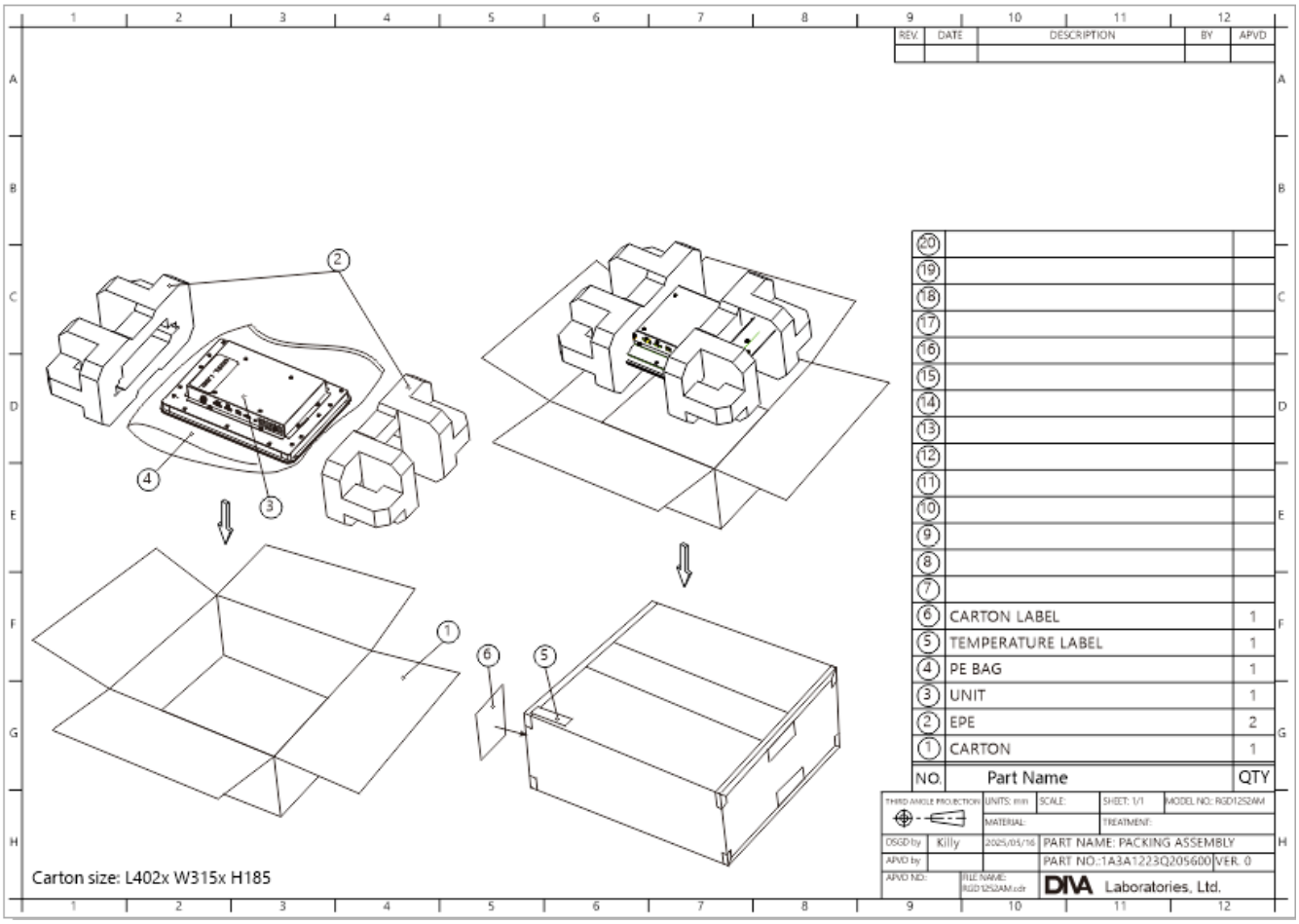

8.6 Pallet Loading

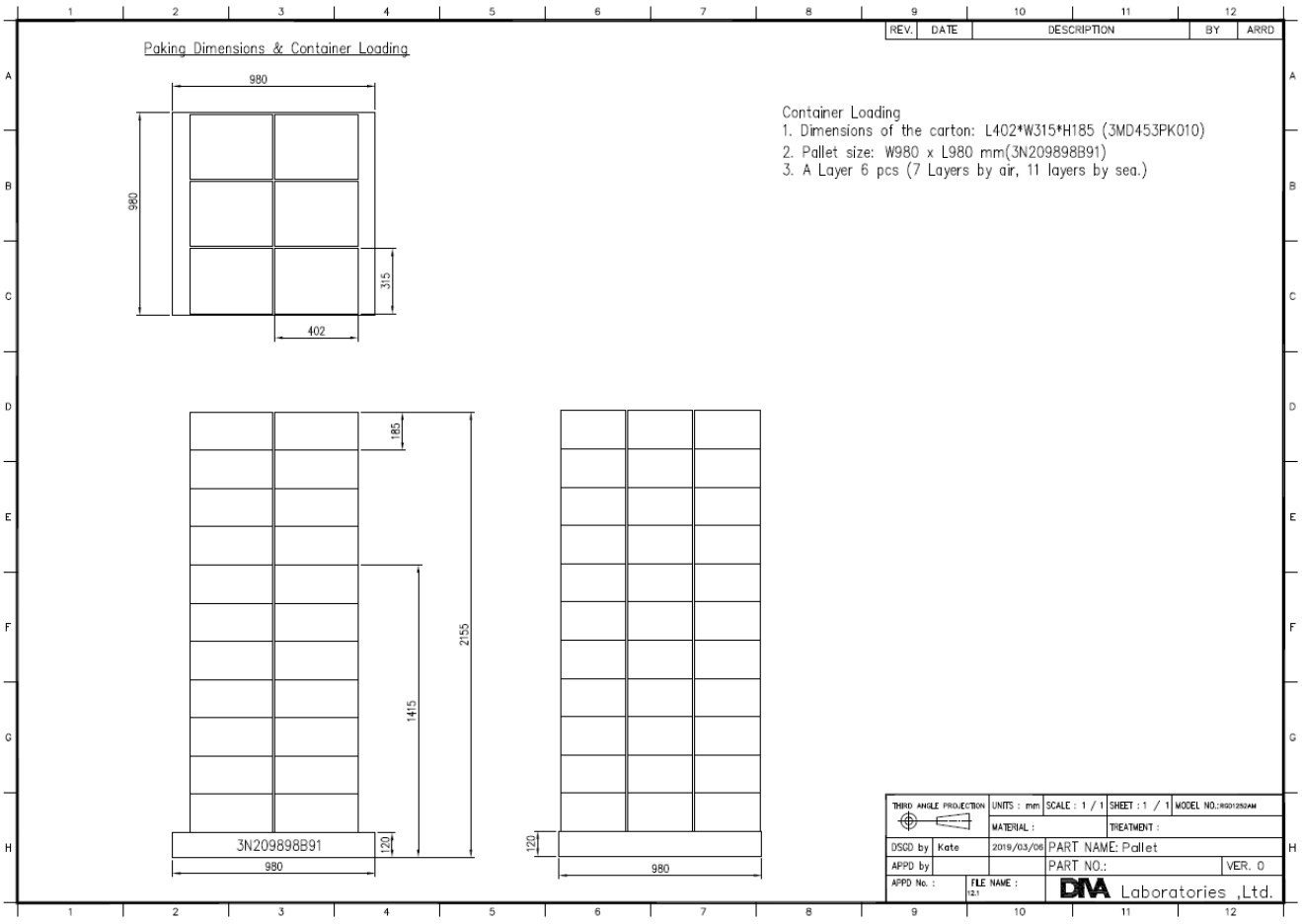

9. Appendix

9.1 Critical and Non-Critical Component List

Critical: Diva notifies customer of impending component change/EOL upon evaluating by Diva engineers. Diva provides available successor solutions and/or options to properly manage the EOL/ECN.

Non-Critical: Component is not affected by product performance and safety certification. ECN notification will be issued. Approval from the customer is not required.

Component	Status
Scalar IC	Critical
Power IC	Critical
Main Driver Board	Critical
Power Supply	Critical
LED Driver Board/ Inverter	Critical
LCD Panel	Critical
Touch Controller	Critical
Touch Sensor	Critical
Firmware	Critical
Stand / Bracket / Accessory	Non-Critical
Cable / Wire	Non-Critical
Subsidiary Mechanic Parts	Non-Critical
Subsidiary Sensor Board	Non-Critical
Subsidiary Interface Board	Non-Critical
Components (Memory, R/L/C, Crystal, Diode, Filter, Connector, Speaker, etc.)	Non-Critical

※ Customized product/parts is not induced on the list.

9.2 WARRANTY

A. Limited Warranty

DIVA Laboratories, Ltd. ("DIVA") warrants the LCD monitor (the "Product" you have purchased from DIVA or from a DIVA or from an authorized DIVA reseller, to be free from defects in materials and workmanship under normal use for a period of three (3) years. The warranty period begins on the date of purchase. Your original purchase invoice (sales receipt) is your proof of purchase. If you cannot provide the original purchase invoice (sales receipt), the warranty period will be based on the manufacture date-code shown on the Product. A Product that has been exchanged is warranted from the original date of purchase. The burden of proving a warranty entitlement is solely on the customer.

This warranty extends only to the original purchaser; it is not transferable to anyone who subsequently purchases, leases, or otherwise obtains the Product. It excludes expendable parts. During the warranty period, DIVA will repair or replace covered hardware with new or equal to new parts and products. All exchanged parts and Products replaced under this warranty will become the property of DIVA. During the warranty period, there will be no charge for labor or parts. Freight costs to return products to DIVA will be the customer's responsibility. If DIVA in it' sole discretion determines that DIVA is unable to repair the Product to good working order, the product may be replaced with an equal product, solely at DIVA's discretion. Customers must notify DIVA Technical Support, in writing within 30 days of a service incident. If DIVA determines that the product does not meet the warranty entitlements, then DIVA's sole responsibility will be to offer a billable repair.

The Warranty is valid only in the countries or territories where the Distributors are located.

B. Warranty Limitation; Exclusion; Exclusive Remedies

This Limited Warranty does not extend to any Product that:

a) Is damaged as a result of use other than for its normal intended purpose, failure to use the product in accordance with the User's Manual, misuse, abuse, or negligence;
b) Is damaged by the use of parts not manufactured or sold by DIVA and its distributors;
c) Is damaged due to any modifications of the product or its original serial number,
d) Is damaged a result of services by anyone other than DIVA or its certified centers.
e) Has Freight damage when returning the Product to DIVA or DIVA's Service Center;
f) Has deterioration of expendable parts such as the LCD panel and/or backlight (e.g. image retention, burned-in, changes in color, changes in color uniformity, defects in pixels)
g) Is damaged due to unusual physical or electrical stress or interference such as failure or fluctuation of electrical power, lighting, static electricity, fire, floods, or any acts of God.

THIS WARRANTY IS MADE IN LIEU OF ALL OTHER WARRANTIES, RIGHTS OR CONDITIONS, EXPRESSLY OR IMPLIED, STATUTORY OR OTHERWISE, INCLUDING, BUT NOT LIMITED TO, ANY IMPLIED WARRANTY OF MERCHANTABILITY, FITNESS FOR A PARTICULAR PURPOSE AND CIRCUMSTANCES ARISING FOR DEALING, CUSTOM OR THE USAGE OF TRADE. THE BUYER IS RESPONSIBLE FOR DETERMINING IF THE PRODUCT IS SUITABLE FOR A SPECIFIC PURPOSE AND/OR MEETS THE BUYER'S PRODUCTION REQUIREMENTS. DIVA SHALL NOT BE HELD LIABLE FOR ANY DAMAGES, INCIDENTAL OR CONSEQUENTIAL, ARISING FROM OR IN CONNECTION TO THE USE OF THE PRODUCT WHETHER OR NOT IT IS CONSISTENT WITH ANY OTHER STATEMENT MADE IN THE WARRANTY DOCUMENT. THIS LIMITED WARRANTY GIVES THE BUYER SPECIFIC LEGAL RIGHTS. THERE MAY ALSO BE OTHER RIGHTS THAT VARY FROM STATE TO STATE. BUYERS ARE ADVISED TO CONSULT APPLICABLE STATE OR PROVINCIAL LAWS FOR FULL DETERMINATION OF THEIR RIGHTS.

C. DIVA Service Policies

Warranty service is subject to the following terms and conditions. Customers may contact DIVA's service center or the customer's dealer or distributor for their respective service entitlement and policies.

1. Service is available for Products purchased and located in the continental United States, Canada, Alaska, Hawaii and Puerto Rico. Shipments to customers cannot be made to PO Boxes. Material returned to the DIVA Service Center may not be sent via USPS.

2. Prior to obtaining warranty service you must contact the Technical Support group. Please have the model number, serial number, and date of purchase, ready when you call. The serial number (S/N) and model number are located on the back of the Product.

3. Products must be out of specification for service. DIVA is the sole judge of whether a product is out of specification.

4. DIVA Technical Support may attempt to help you resolve your problem over the telephone. During problem resolution, you are required to assist DIVA with its performing routine diagnostic procedures. If appropriate, DIVA will then issue you a Return Materials Authorizations (RMA) number to be used as a means of identifying the Product. NO PRODUCT MAY BE RETURNED FOR ANY REASON WITHOUT AN RMA. FAILURE TO DO SO MAY RESULT IN REFUSED SHIPMENTS.

5. Warranty service that cannot be provided via telephone requires you to ship the Product to the designated DIVA Service Center. The Service Center address will be supplied at the time the RMA is issued. You must prepay any shipping charges, export taxes, custom duties and taxes or any other charges associated with transporting the Product. In addition, you are responsible for insuring the Product during shipment. You assume any and all risk of loss during shipment and until delivery of the Product to the designated DIVA Service Center. You must use the original shipping and packing materials and provide a description of the symptoms of the problem. If the original shipping and Packing materials and boxes are not available, you are responsible for ensuring that the Product is properly packaged for shipping. THE RETURN MATERIALS AUTHORIZATION (RMA) NUMBER MUST BE PLACED ON THE EXTERIOR OF THE SHIPPING CONTAINER.

PHYSICAL DAMAGE THAT OCCURRS DURING SHIPMENT IS NOT WARRANTED.

6. THE RAMA EXPIRES 30 DAYS AFTER ITS ISSUANCE. DEFECTIVE PRODUCTS THAT HAVE A RMA MUST BE RETURNED WITHIN THAT TIME.

7. DIVA is not responsible for a Product shipped to the Authorized Service Center. Products that arrive physically or cosmetically damaged or scratched, including but not limited to, scratches on the Product, the panel, or bezel, or damage beyond normal usage, will not be eligible for replacement. In this event, remedial service will be repair and return. PRODUCTS THAT ARRIVE AT THE AUTHORIZED SERVICE CENTER WITH COSMETIC OR PHYSICAL DAMAGE WILL BE ASSESSED A REPAIR CHARGE.

9.3 Panel IIS SPEC

AUO Confidential
For GE Internal Use Only
20190313 17:15:29

AU OPTRONICS CORPORATION

Specification

INCOMING INSPECTION STANDARD FOR 12.1" Series (A grade)

Approved By	Prepared By
Hunglin Tsai	Jia Long

General Display Business Unit/AU Optronics

Customer	Checked and Approved by

For GE internal use only - provided by jialongliao on 2019/03/13

Inspection criteria's change record				
Version/ Effective Date (Approval)	**Page**	**Inspection Item**	**Previous Inspection Spec**	**New Inspection Spec**
2018 Nov. 27th	All	All		G121 Series with VA type IIS
2018 Dec. 31st	All	All		For G121 Series including of brightness over 1000 nits.
2019 March. 13	All	All		Adding TP inspection spec

AUO Confidential For GE Internal Use Only 20190313 17:15:29

For GE internal use only - provided by jialongliao on 2019/03/13

1. Scope:

1.1 The incoming inspection standards shall be applied to TFT-LCD Modules or TFT-LCD Modules with TP/Cover Lens (hereinafter called ""Modules"") that supplied by AU Optronics Corporation (hereinafter called ""seller"").

1.2 Specifications contains

- Electrical inspection specification
- Appearance specification
- Outside dimension specification

2. Incoming inspection:

The buyer (customer) shall inspect the modules within twenty calendar days since the delivery date (the ""inspection period"") at its own cost. The results of the inspection (acceptance or rejection) shall be recorded in writing, and a copy of this writing will be promptly sent to the seller.

The buyer may, under commercially reasonable reject procedures, reject an entire lot in the delivery involved. Within the inspection period,if the samples of modules within a lot show a number of unacceptable defects in accordance with this incoming inspection standards, the buyer must notify the seller in writing of any such rejection promptly, and not later than within three business days in the end of the inspection period.

Should the buyer fail to notify the seller within the inspection period, the buyer''s right to reject the modules shall be lapsed and the modules shall be deemed to have been accepted by the buyer.

3. Inspection sampling method:

Unless otherwise agree in writing, the method of incoming inspection shall be based on ANSI/ASQL Z1.4-2003.

3.1 Lot size: Quantity per shipment lot per model.

3.2 Sampling type: Normal inspection, single sampling.

3.3 Sampling level: Level II.

3.4 Acceptable quality level (AQL):

Major defect: AQL=1.0%.

Minor defect: AQL=2.5%.

4. Inspection instruments:

4.1 Pattern generator: LD-2000 or equivalent model.

4.2 Video board: AU video board or equivalent. The output of the signal should comply with the specification provided by AU.

4.3 Luminance colorimeter: Topcon BM-7 or equivalent model

5. Inspection environment conditions:

5.1 Room temperature : **20 ~ 25** C.

5.2 Humidity: **65±5**% RH.

5.3 Illumination: Fluorescent light (Day-Light Type) display surface illumination to be **300 ~ 700** lux. (standard **500** lux.)

AUO Confidential For GE Internal Use Only 20190313 17:15:29

For GE internal use only - provided by jialongliao on 2019/03/13

5.4 To be a distance about **35 ± 5** cm in front of LCD unit, viewing line should be perpendicular to the surface of the modules judge the visual appearance with human's eyes. (±10° viewing edge will be allowed)

5.5 Take off the protector of polarizer while judging the display area.

5.6 If there is any question while judging, check the panel again while operating.

6. Classification of defects:

Defects are classified as major defects and minor defects according to the degree of defectiveness defined herein.

Major defects:

A major defect is a defect that is likely to result in failure, or to reduce materially the usability of the product for its intended purpose.

Minor defects:

A minor defect is either a defect that is not likely to reduce materially the usability of the product for its intended purpose, or a departure from an intended purpose with little bearing on the effective use or operation of the product.

6.1 Electrical inspection specification

Inspection Item	Specification	
Line defect	Can't be seen.	
Bright dots	≦2 dots (note 1)	
Dark dots	≦3 dots	
Total dots defect	≦3 dots	
Continuous defect	Two continuous bright dots :	Not allowed
	Over three continuous bright dots (vertical, horizontal, oblique) :	Not allowed
	Two continuous dark dots (vertical, horizontal, oblique) :	≦1 pair
	Over three continuous dark dots (vertical, horizontal, oblique) :	Not allowed
	Two continuous dark dots and bright dots (vertical, horizontal, oblique) :	≦1 pair
	Over three continuous dots (vertical, horizontal, oblique) :	Not allowed
	Distance between 2 Bright dots :	≧15mm
	Distance between 2 Dark dots :	≧15mm
	Distance between Dark dot and Bright Dot :	≧15mm
Mura	Use 5% ND filter or judged by equivalent limit sample (note 6) Use 1% ND filter or judged by equivalent limit sample for Brightness over 1000 nits (note 6)	

Note 1) Judgment criteria (For Bright dot and Small Bright dot) : Using ND Filter 5% (distance : 30~40 cm). If it could be observed, dot defines as one bright dot. If not, dot defines as one small bright dot.
Small bright dot should be accepted if N≦6 which invisible through 5% ND filter.

For GE internal use only - provided by jialongliao on 2019/03/13

Note 2) Adjacent-dot defect should be observed under the same display pattern in any one of Black/Green/Blue/Red pattern.

*Inspection pattern: Standard inspection patterns of dot defect are listed below. AU uses these patterns as standard criteria for judging dot defect. Please inform AU if any other pattern is to be used to examine dot defect.

Test Pattern	**Defect**
Full Black	For bright dot(s)
Full White	For dark dot(s)
Monotone Red /Green /Blue	For bright and dark dot(s)

Note 3) Definition of two continuous bright dots: Only for two continuous dots (included vertical, horizontal, oblique type) (Fig.1)

Note 4) In three (or more) adjacent dot defect, for any 3rd dot that adjacent to 2 continuous defective dots (can be of any combination of bright dots and dark dots), the 3rd dot, no matter how large it may be, should be viewed as a dot.

Note 5) Defect criteria diagram

5-1) Adjacent Dot defect diagram:

Adjacent-dot defect : refer to Figure 1, dot 1,2,..,8 around A are all A's adjacent dots



Fig.1

5-2) Definition of distance between defect dots as following:

Fig.2

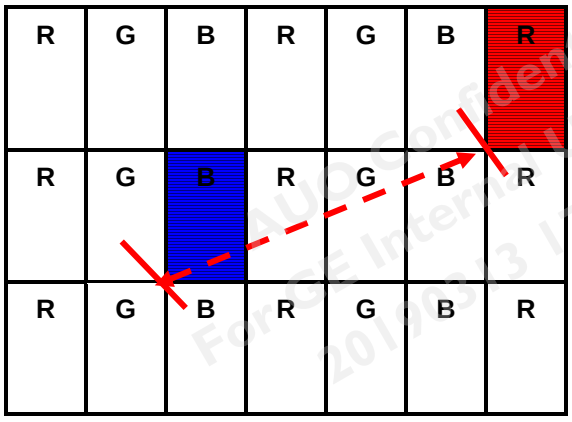

A: Distance between defect dots

Defect Dot

Note 6) Unless otherwise specified by written document or limit samples, Mura (display un-uniformity) should inspected under the ND filter and shall be accepted when it is invisible 5% ND filter is applied. For brightness over 1000nits, Mura (display un-uniformity) should inspected under the ND filter and shall be accepted when it is invisible 1% ND filter is applied.

ND filter use method: The inspection method of ND Filter - holding ND filter in front of the panel around 5 cm and examine the panel from **35±5** cm in the front view for **3** seconds. (Fig.3)

For GE internal use only - provided by jialongliao on 2019/03/13

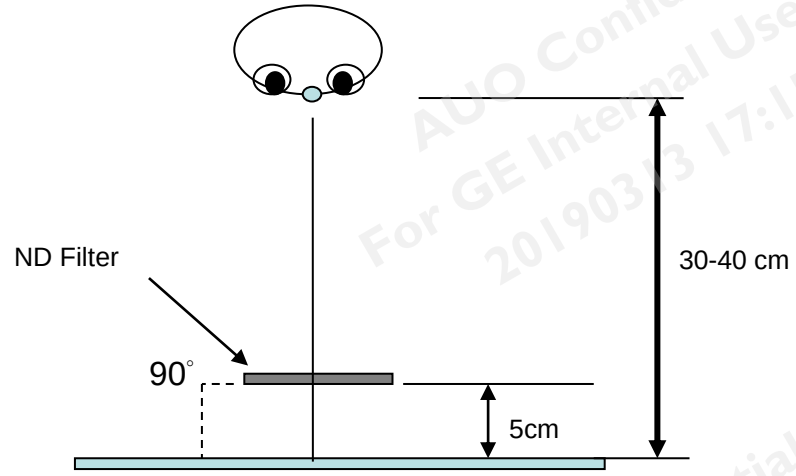

Fig.3

Note 7) While operating over 50℃ ambient temperature, there should be no function failure occur and Mura (display un-uniformity) should be invisible under 1% ND filter applied.

Note 8) Image Retention : 5 seconds test pattern and image retention must be disappeared in 5 seconds after pattern changed .

6.2 Scratches, dent, extraneous substances and Appearance inspection specification

Judge area	**Judge item**		**Inspection specification**			**Judge criterion**	
						Major	**Minor**
Active area	Particles on the polarizer	Circular	**Average diameter: D (mm)**		**Numbers**		○
			D≦0.15		Disregarded		
			0.15＜D≦0.50		n≦3		
			0.50＜D		n＝0		
		Linear	**Width: W (mm)** **Length: L (mm)**		**Numbers**		○
			W≦0.03	L≦0.5	Disregarded		
			0.03＜W≦0.07	0.5＜L≦ 2.0	n≦3		
			0.07＜W	2.0＜L	n＝0		
	Scratch/Dent on the polarizer	Circular	**Average diameter: D (mm)**		**Numbers**		○
			D≦0.15		Disregarded		
			0.15＜D≦0.50		n≦3		
			0.50＜D		n＝0		
		Linear	**Width: W (mm)** **Length: L (mm)**		**Numbers**		○
			W≦0.03	L≦0.5	Disregarded		
			0.03＜W≦0.07	0.5＜L≦ 2.0	n≦3		
			0.07＜W	2.0＜L	n＝0		
	Bubble on the	Circular	**Average diameter: D (mm)**		**Numbers**		○
			D≦0.15		Disregarded		

For GE internal use only - provided by jialongliao on 2019/03/13

	polarizer		0.15＜D≦0.50		n≦3		
			0.50＜D		n＝0		
	Extraneous substances	Circular	**Average diameter: D (mm)**		**Numbers**		○
			D≦0.15		Disregarded		
			0.15＜D≦0.50		n≦3		
			0.50＜D		n＝0		
		Linear	**Width: W (mm)** **Length: L (mm)**		**Numbers**		○
			W≦0.03	L≦0.5	Disregarded		
			0.03＜W≦0.07	0.5＜L≦ 2.0	n≦3		
			0.07＜W	2.0＜L	n＝0		
From Active area outside 0.3mm	The end of polarizer		The defect can't be seen ,from active area outside 0.3mm				○
Bezel	Gap between front bezel and glass on all sides		W ＜ 0.8mm (For LCM modules only)				○
	Scratches, Wrap and Sunken		No harm, dangerous				○
	Assembly Fail		Not allowed			○	
	Color Difference		Allowed (No harm, dangerous)				○
Label (S/N, B/L, WEEK)	No label		Not allowed			○	
	Invert label					○	
	Content Error					○	
	Dirt		Word can be read. Barcode can be scanned.				○
	Not clear						○
	Word out of shape						○
	Broken						○
	Crease						○
	Label overlapping						○
	Position		Be attached on right position				○
Screw	Not enough (Q'ty)		Not allowed			○	
	Loose		Not allowed			○	
Connector	Appearance		No practical display function impacted			○	

AUO Confidential
For GE Internal Use Only
20190313 17:15:29

For GE internal use only - provided by jialongliao on 2019/03/13

6.3 Touch panel appearance inspection specification :

No.	**Inspection Item**	**Specification**
1	Touch Panel no draw line	Test the touch panel for three times. If there is 1 time successful among the 3 times, then judge OK
2	Touch Panel disorderly dot	Test the touch panel for three times. If there is 1 time successful among the 3 times, then judge OK
3	Touch Panel line break	Test the touch panel for three times. If there is 1 time successful among the 3 times, then judge OK
4	Touch Panel draw line Abnormal Display	Test the touch panel for three times. If there is 1 time successful among the 3 times, then judge OK

6.4 Touch panel appearance inspection specification :

Cover lens	Corner / Crack	X≦2.0mm Y≦2.0mm Z≦1/2 Glass thickness Creeping crack is not allowed N≦2			○	
	Edge / Crack	X≦5mm, Y≦2mm, Z≦1/2 Glass thickness Creeping crack is not allowed N≦2 for each side			○	
	BM pin hole	D≦0.1mm, Disregarded 0.1mm＜D≦0.2mm, N≦3 , ND≧5mm D＞0.2, NG			○	
Active / Painted Area	Circular	**Average diameter: D (mm)**		**Numbers**		○
		D≦0.20		Disregarded		
		0.20＜D≦0.50		N≦3 , ND＞15mm		
		0.50＜D		N＝0		
Active	Linear (Note: 14)	**Width: W (mm) Length: L (mm)**		**Numbers**		○
		W≦0.1	L≦3.0	Disregarded		
		0.1＜W≦0.2	3＜L≦8	N≦2 , ND＞15mm		
		0.2＜W	8＜L	N＝0		
Painted Area	Linear (Note: 14)	**Width: W (mm) Length: L (mm)**		**Numbers**		○
		W≦0.1	L≦3.0	Disregarded		
		0.1＜W≦0.2	3＜L≦8	N≦2 , ND＞15mm		
		0.2＜W	8＜L	N＝0		

For GE internal use only - provided by jialongliao on 2019/03/13

Active / Painted Area	Stain	Use ND 5% can't be seen		○

Note 1 : Extraneous substances which can be wiped out, such as fingerprint and particles are not considered as a defect.

Note 2 : Defects on the Black Matrix (outside Active Area 0.3mm) are not considered as a defect.

Note 3 : Defect size definition: (Unit:mm)

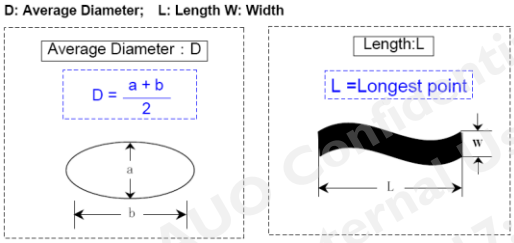

7. Inspection judgement:

7.1 The judgement of the shipped lot (acceptance or rejection) should follow the sampling plan of ANSI/ASQL Z1.4-2003, single sampling, normal inspection, level II.

7.2 If the number of defects is equal to or less than the applicable acceptance level, the lot shall be accepted.

7.3 If the number of defects is more than the applicable acceptance level, the lot shall be rejected and the buyer should inform the seller of the result of incoming inspection in writing.

8. Precaution:

Please pay attention to the following items when you use the Modules with back-light unit.

8.1. Do not twist or bend the module and prevent the unsuitable external force for Modules during assembly.

8.2. Adopt measures in adequately ventilated environment. Be sure to use the module in the specified temperature range.

8.3. Avoid dust or oil mist during assembly.

8.4. Follow the correct power sequence while operating. Do not apply the invalid signal, otherwise, it will cause improper shut down and damage the module.

8.5. Try to avoid the electrical magnetic interference, and it will be more safety and less noise.

8.6. Please operate modules in suitable temperature. The response time & brightness will drift by different temperature.

8.7. Avoid displaying the fixed pattern (exclude the white pattern) in a long period; otherwise, it will cause image sticking.

8.8. Be sure to turn off the power when connecting or disconnecting the circuit.

8.9. Display surface Polarizer scratches easily, please avoid dirt and stains carefully. For TP and Cover lens, be careful to be damaged by external force or hard object.

8.10. A dewdrop may lead to destruction. Please wipe off any moisture before using modules.

8.11. Sudden temperature changes cause condensation, and it will cause polarizer, TP and cover lens damaged.

8.12. High temperature and humidity may degrade performance. Please do not expose the modules to the direct sunlight and so on.

For GE internal use only - provided by jialongliao on 2019/03/13

8.13. Avoid any acid or chlorine compounds, which are harmful to the Modules.

8.14. Static electricity will damage the modules; please do not touch the modules without any grounded device connected.

8.15. Do not disassemble and reassemble the modules by self.

8.16. Do not touch the rear side directly to avoid the electrical shock by the backlight high voltage.

8.17. Avoid strong vibration or shock. Or it will cause the modules broken.

8.18. Store the modules in suitable environment with regular packing.

8.19. Be careful of injury from a broken display module. Please avoid the pressure adding to the surface (front or rear side) of modules, because it will cause the non-uniformity or other function issue to display.

8.20. Please softly tear the sticking tape of protective film to prevent bezel out of shape and un-uniformity display.

AU Optronics Corp.
No. 1, Li-Hsin Rd. II,
Science-Based Industrial Park,
Hsin-Chu City, Taiwan, R.O.C.Tel :886-3-500-8800
Fax:886-3-666-9320

AUO Confidential
For GE Internal Use Only
20190313 17:15:29

For GE internal use only - provided by jialongliao on 2019/03/13