Document Information for: 2106445-001-AGL

Type	Drawing Print
Name	2106445-001-AGL
Revision	G
State	Released
ECO	MR2370044
Description	TOP COVER , MONITOR
Originator	502194464_thiyagarajan__pt



3MD634PA010 (M3458)

File List
1. 2106445-001-AGL.pdf

Approval Information		
Person	**Action**	**Date and Time**
212748684_raja__n	Approved	11/17/2023 6:13:31 AM
212715011_deepa__a.c	Approved	11/16/2023 1:56:37 PM
212589266_luis__zuniga	Approved	11/18/2023 12:18:43 AM
305015638_vijith__venugopalan	Approved	11/16/2023 1:14:26 PM
305030898_prashanth__hc	Approved	11/20/2023 5:34:42 AM
212809061_kathia__olague	Approved	11/21/2023 3:46:01 PM
223057962_aditya__bhargava	Approved	11/20/2023 11:28:01 AM
305012982_nishad__p	Approved	11/20/2023 5:09:30 AM
223098675_adrian__mares	Approved	11/15/2023 2:37:40 PM
305014804_mohammad suhail__shaikh	Approved	11/17/2023 3:54:52 AM
305014804_mohammad suhail__shaikh	Approved	11/17/2023 3:54:52 AM

State - Released (Production) Release Date (06-Oct-2023) MR2370044
Approval details stored in the electronic master, the Global MWS PLM System

This page is generated automatically by the GEHC MyWorkshop System.
Printed documents are for Reference Only and may be out-of-date.
Check the database to ensure you have the correct revision.

NOTES:

1. INTERPRET DIMENSIONING AND TOLERANCING IN ACCORDANCE WITH ASME Y14.5-2009

2. SUBSTRATE
   MATERIAL : XYLEX HX7509HP-7H1D549T
   FINISH : APPERANCE QUALITY CLASS AS PER GEHC ENGINEERING STANDARD 5254474GSP
   APPERANCE CLASS : S-03 ON HIGHLIGHTED SURFACES, ALL OTHER SURFACES S-01.
   COLOR: TRANSLUCENT BLACK PER DOC 46-221381, 46-221499
   TEXTURE: 46-221380P4 (MT-1055-6)

   SOFT RESIN
   MATERIAL: DIOSHY TPE, UL-870EM
   COLOR: RAL9004 BLACK

3. NO REGRINDING MATERIAL ALLOWED.

4. ALL FLASH TO BE REMOVED TO FLUSH WITH ALL SURFACES.

5. ALL SHARP CORNERS AND EDGES SHALL HAVE MINIMUM RADIUS OF 0.2mm.

6. FOR DETAILED GEOMETRY REFER 3D CAD DATA 2106445-001-AGL_REV-F.STP.

7. REFERENCE INFORMATION: VOLUME = 116914.33 MM^3, SURFACE AREA = 131146.43 MM^2

8. PARTS TO BE GEHC ROHS-3 COMPLIANT PER 5240305GSP.

9. ALL INSERTS TO BE INSTALLED VIA ULTRASONIC WELDING/HEAT STAKING.

10. VENDOR MUST MARK WITH FOLLOWING.
    a) PART NUMBER
    b) PART REVISION
    c) MATERIAL
    d) DATE CODE (MONTH & YEAR)
    e) SUPPLIER ID
    f) RECYCLE DESIGNATION
    SYMBOLS, NUMBERS & CHARACTERS APPROXIMATELY 0.1 mm RAISED. THE MARKING MUST BE CLEAR AND LEGIBLE.IF THE INFORMATION DOES NOT FIT ON PART, IT MUST BE INCLUDED ON SHIPPING PACKAGING.MARKING DEFINITION PER 46-274914. CLASS 1. LABEL PLACEMENT AS SHOWN

11. OREINTATION OF PART ON THIS DRAWING DOES NOT REFLECT OREINTATION OF PART IN THE TOOL.

12. OUTSIDE SURFACES TO BE FREE FROM SINK MARKS, EJECTOR PIN MARKS, CHILL WELD LINES, FLOW LINES, BLUSH MARKS, ETC., PER DOC0411596.

13. PACKAGING SHALL PROVIDE PROTECTION DURING SHIPMENT,HANDLING AND STORAGE PER 2100268PRE.

14. PART(S) INSPECTION SHALL BE APPROVED BY GEHC.

15. MOLD RELEASE USE NOT PERMITTED.

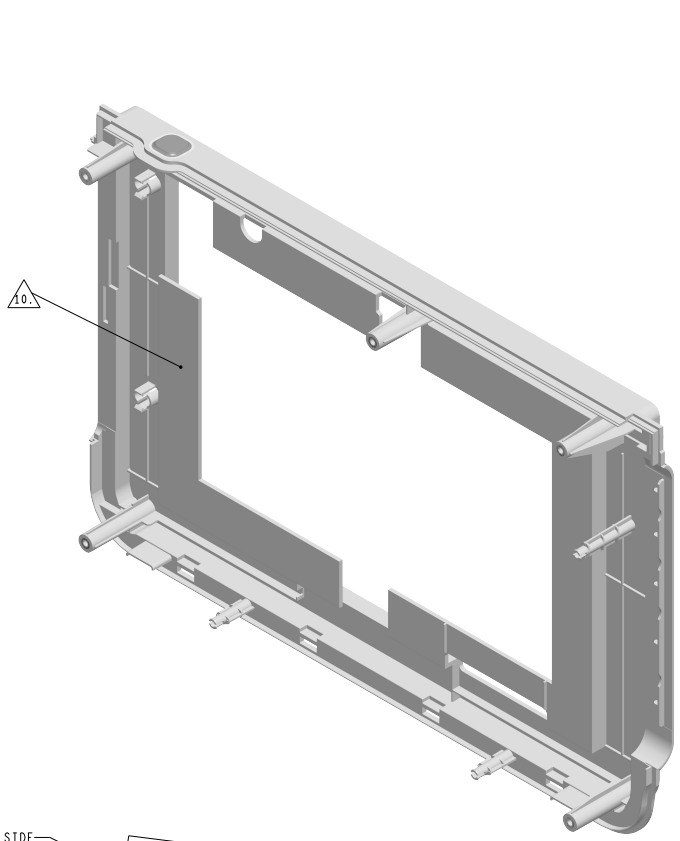

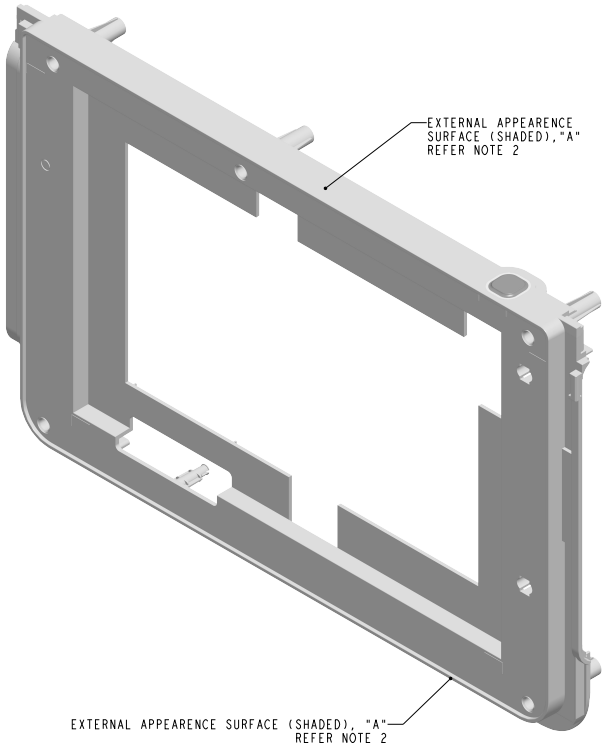

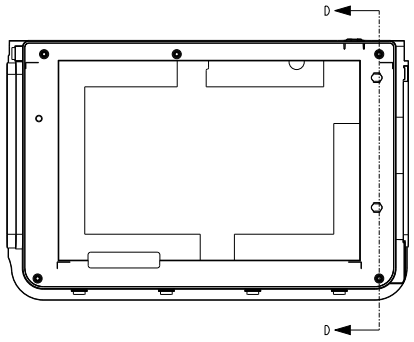

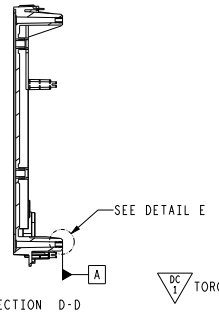

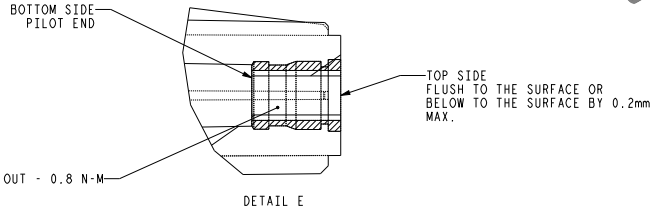

設計驗證
工程課
2026 -06- 12
發行

3MD634PA010 (M3458)

ESSENTIAL CHARACTERISTICS SUMMARY TABLE			
IDENTIFIER	LOC	ACCEPTANCE METHOD	SAMPLING RATE
EC1	SHEET 2, ZONE B4	Dimensional Report	1 per batch
EC2	SHEET 2, ZONE B4	Dimensional Report	1 per batch
EC3	SHEET 2, ZONE D3	Dimensional Report	1 per batch

REV	REVISIONS	ECO
G	POWER BUTTON HEIGHT CHANGED AT SECTION KK IN SHEET3 ZONE D1	ER0014784
F	TOLERANCE UPDATED AT SHEET 2 ZONE C8, SHEET 3 ZONE D4.	ER0014236
E	DESIGN UPDATED	ER0012625
D	DESIGN UPDATED	ER0010875
C	POST TOOLING UPDATE	ER0006770
B	UPDATED AS PER SUPPLIER DFM	ER0004467
1	INITIAL RELEASE	ER0091622

DESIGN OWNER: NISHAD P
ESSENTIAL CLASSIFICATION: EC ESSENTIAL YES; NON ESSENTIAL NO
TOLERANCES AND FINISH UNLESS OTHERWISE SPECIFIED:
1) DIMENSIONS ARE IN MM. X.X ±0.5, X.XX ±0.30, X.XXX ±0.150, ANGLES ±1.0°
2) SURFACE ROUGHNESS ···
THIRD ANGLE PROJECTION
RoHS COMPLIANT
ITEM INDICATED MAY REQUIRE A SUPPLIER QUALITY PLAN.
DO NOT SCALE DRAWING
GE Healthcare
ITEM DESCRIPTION: TOP COVER, MONITOR
DRAWING SIZE: D | ITEM NUMBER: 2106445-001-AGL | REVISION: G
PROJECT: LOTUS | SCALE: -- | SHEET: 1 OF 4

CONFIDENTIAL - THIS DESIGN AND THE DESIGN SHOWN REPRESENTED ARE THE PROPERTY OF GE HEALTHCARE AND MAY NOT BE COPIED, USED OR DISCLOSED IN WHOLE OR IN PART WITHOUT COMPLIANCE WITH THE CONFIDENTIALITY TERMS OF GE.

State: Released Production| Release Date: 09-Oct-2023| MR2370044
Approval details stored in the electronic archive - Produal (WW) PLM System

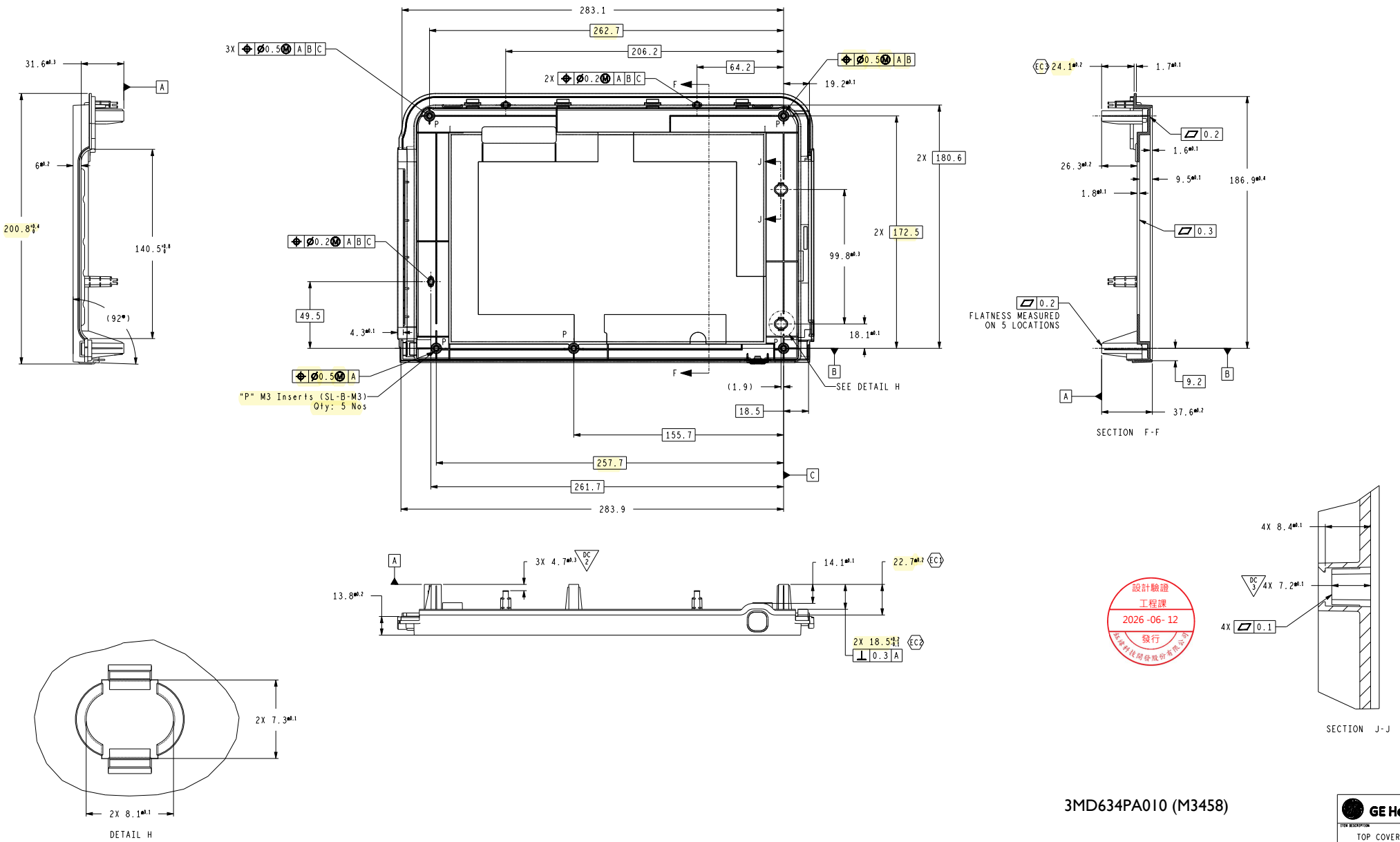

設計驗證
工程課
2026 -06- 12
發行
廣達科技開發股份有限公司

3MD634PA010 (M3458)

GE Healthcare

ITEM DESCRIPTION	TOP COVER, MONITOR
DRAWING SIZE	D
ITEM NUMBER	2106445-001-AGL
REVISION	G
PROJECT	LOTUS
SCALE	--
SHEET	2 OF 4

RoHS COMPLIANT

State: Released (Production) Release Date: 06-Oct-2023) MR2370044
Approval details stored in the electronic master, the Global MWS PLM System

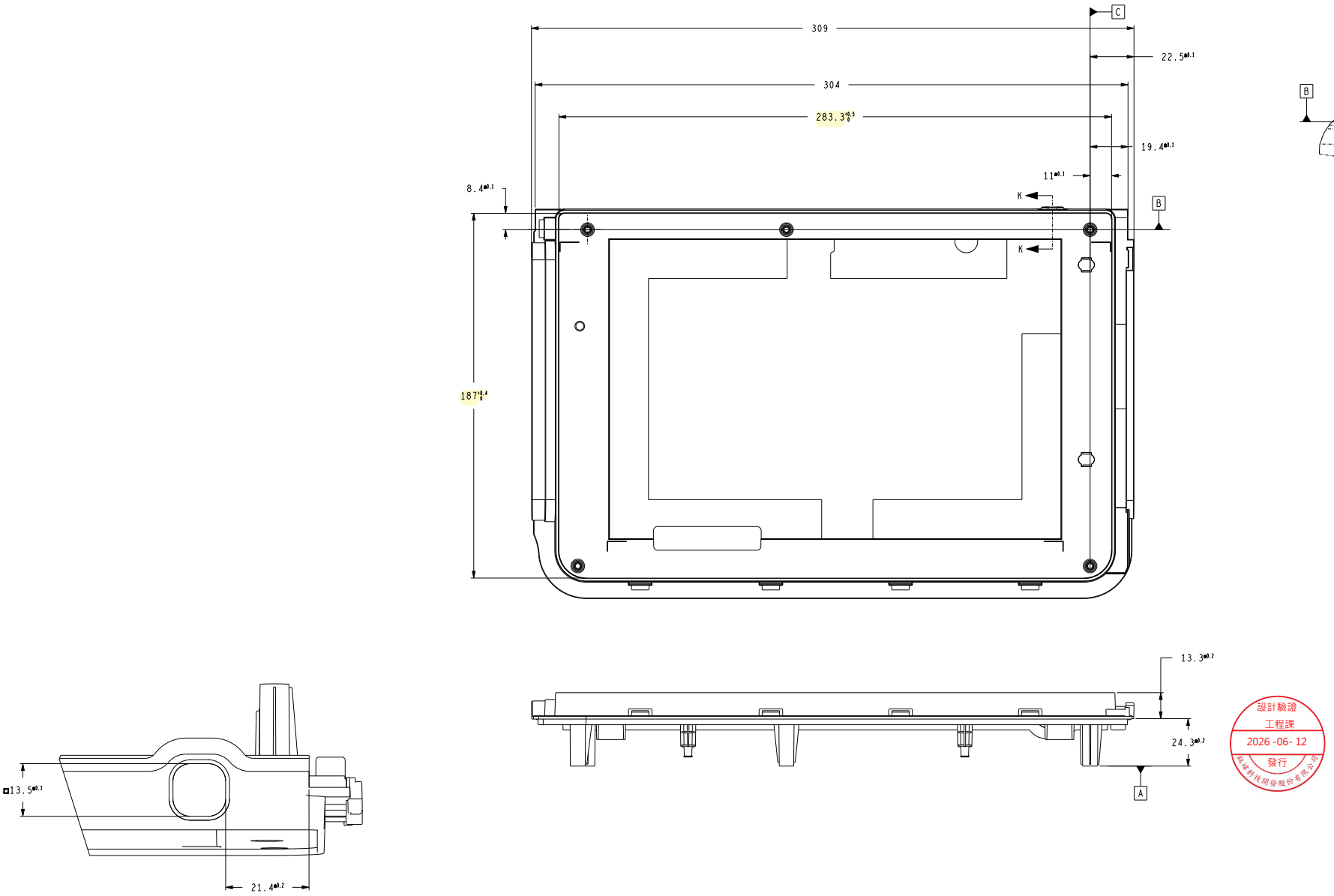

設計驗證
工程課
2026 -06- 12
發行
鈺瑞科技開發股份有限公司

3MD634PA010 (M3458)

GE Healthcare

TOP COVER, MONITOR

DRAWING SIZE	ITEM NUMBER	REVISION
D	2106445-001-AGL	6

PROJECT	SCALE	SHEET
	--	3 OF 4

RoHS COMPLIANT

State - Released (Production) Release Date (06-Oct-2023) MRI2370044
Approval details stored in the electronic matter, the Global MWS PLM System

STEP 1 : OVER MOLDING

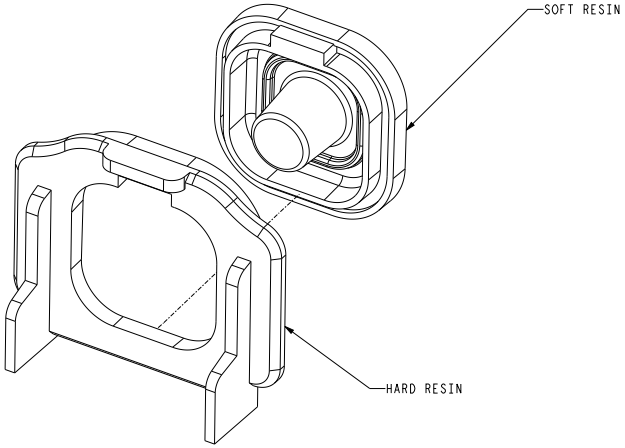

NOTE : SOFT RESIN AND HARD RESIN BOTH WILL BE OVERMOLDED.
NO OVERMOLDING DEFECTS ALLOWED.

STEP 2 : INSERT MOLDING

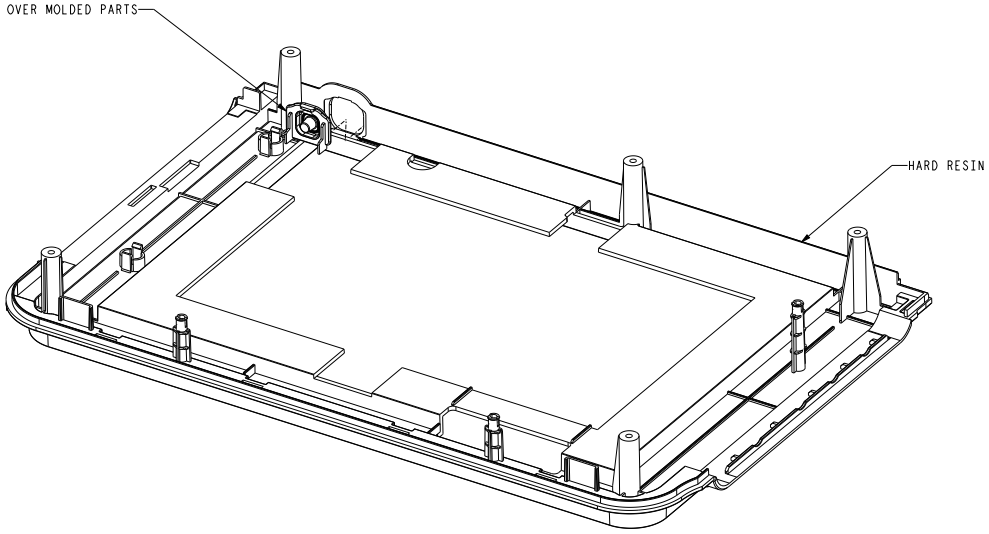

NOTE : OVER MOLDED PARTS IN STEP 1 WILL BE INSERT MOLDED WITH HARD RESIN.
NO INSERT MOLDING DEFECTS ALLOWED.

設計驗證
工程課
2026 -06- 12
發行
廣達科技開發股份有限公司

3MD634PA010 (M3458)

GE Healthcare

ITEM DESCRIPTION: TOP COVER, MONITOR		
DRAWING SIZE: D	ITEM NUMBER: 2106445-001-AGL	REVISION: G
PROJECT:	SCALE: --	SHEET: 4 OF 4

RoHS COMPLIANT

State : Released (Production) Release Date (06-Oct-2023) MR2370044
Approval details stored in the electronic master, the Global MWS PLM System