SPECIFICATION
FOR
APPROVAL

( ) **Preliminary Specification**
(●) **Final Specification**

Title	21.5" Full HD TFT LCD

BUYER	NEC DS
MODEL	

SUPPLIER	LG Display Co., Ltd.
*MODEL	LM215WF3
SUFFIX	SLS2

*When you obtain standard approval,
please use the above model name without suffix

APPROVED BY	SIGNATURE DATE
/	
/	
/	

開發部
2022.03.21
發行
鈺鐘科技開發股份有限公司

Please return 1 copy for your confirmation with your signature and comments.

APPROVED BY	SIGNATURE DATE
SangHoon Lee / G.Manager	
REVIEWED BY	
JaeHoon Song / Manager [C]	
SuYong An / Manager [M]	
SangHo Han / Manager [O]	
HaSuk Kang / Manager [P]	
PREPARED BY	
Kyuha Oh / Engineer	

Product engineering dept.
LG Display Co., Ltd

CONFIDENTIAL
2019/11/13 INTERNAL USE ONLY

Contents

No.	Item	Page
	Cover	1
	Contents	2
	Record of Revisions	3
1	General Description	4
2	Absolute Maximum Ratings	5
3	Electrical Specifications	6
3-1	Electrical Characteristics	6
3-2	Interface Connections	9
3-3	Signal Timing Specifications	14
3-4	Signal Timing Waveforms	15
3-5	Color Data Reference	16
3-6	Power Sequence	17
3-7	Power Dip Condition	18
4	Optical Specifications	19
5	Mechanical Characteristics	23
6	Reliability	26
7	International Standards	27
7-1	Safety	27
7-2	Environment	27
8	Packing	28
8-1	Designation of Lot Mark	28
8-2	Packing Form	29
9	Precautions	30
9-1	Mounting Precautions	30
9-2	Operating Precautions	30
9-3	Electrostatic Discharge Control	31
9-4	Precautions For Strong Light Exposure	31
9-5	Storage	31
9-6	Handling Precautions For Protection Film	31

CONFIDENTIAL
2019/11/19 INTERNAL USE ONLY

RECORD OF REVISIONS

Revision No	Revision Date	Page	Before	After	Application Date
0.0	May, 14, 2019	-	-	First Draft(Preliminary)	
0.1	May, 28, 2019	4,8	Power consumption Total (8.66 W) (Typ.) (2.7 W) @VLCD, (5.96 W) Parameter / Symbol / Values (Min. Typ. Max.) / Unit / Notes LED String Current / Is / - / (70) / (75) / mA / 1, 2 LED String Voltage / Vs / TBD / TBD / TBD / V / 1, 3 Power Consumption / PBar / - / TBD / TBD / Watt / 2, 5 LED Life Time / LED_LT / 30,000 / - / - / Hrs / 4	Update Power consumption Total (9.8W) (Typ.) (3.0W) @VLCD, (6.8W) Parameter / Symbol / Values (Min. Typ. Max.) / Unit / Notes LED String Current / Is / - / (70) / (75) / mA / 1, 2 LED String Voltage / Vs / TBD / (48.6) / TBD / V / 1, 3 Power Consumption / PBar / - / (6.8) / TBD / Watt / 2, 5 LED Life Time / LED_LT / 30,000 / - / - / Hrs / 4	May, 28, 2019
0.2	Jun, 24, 2019	29	Packing Form	Update Packing Form	Jun, 24, 2019
1.0	Aug, 28, 2019	6	Permissive Power Input Ripple Max. : 100mVp-p	Permissive Power Input Ripple Max. : 400mVp-p	Aug, 28, 2019
1.0	Aug, 28, 2019	6	Rush current Max. : 3.5A	Rush current Max. : 3.0A	Aug, 28, 2019
1.0	Aug, 28, 2019	19	Response Time Max. : 28ms	Response Time Max. : 25ms	Aug, 28, 2019
1.0	Aug, 28, 2019	-	-	Final specification	Aug, 28, 2019

CONFIDENTIAL
2019/11/19 INTERNAL USE ONLY

1. General Description

LM215WF3 is a Color Active Matrix Liquid Crystal Display with a Light Emitting Diode (White LED) backlight assembly without LED driver. The matrix employs a-Si Thin Film Transistor as the active element.
It is a transmissive type display operating in the normally black mode. It has a 21.5 inch diagonally measured active display area with FHD resolution (1080 vertical by 1920horizontal pixel array) Each pixel is divided into Red, Green and Blue sub-pixels or dots which are arranged in vertical stripes. Gray scale or the brightness of the sub-pixel color is determined with a 8-bit gray scale signal for each dot, thus, presenting a palette of more than 16,7M colors with A-FRC (Advanced Frame Rate Control). It has been designed to apply the 8Bit 2 port LVDS interface. It is intended to support displays where high brightness, super wide viewing angle, high color saturation, and high color are important.

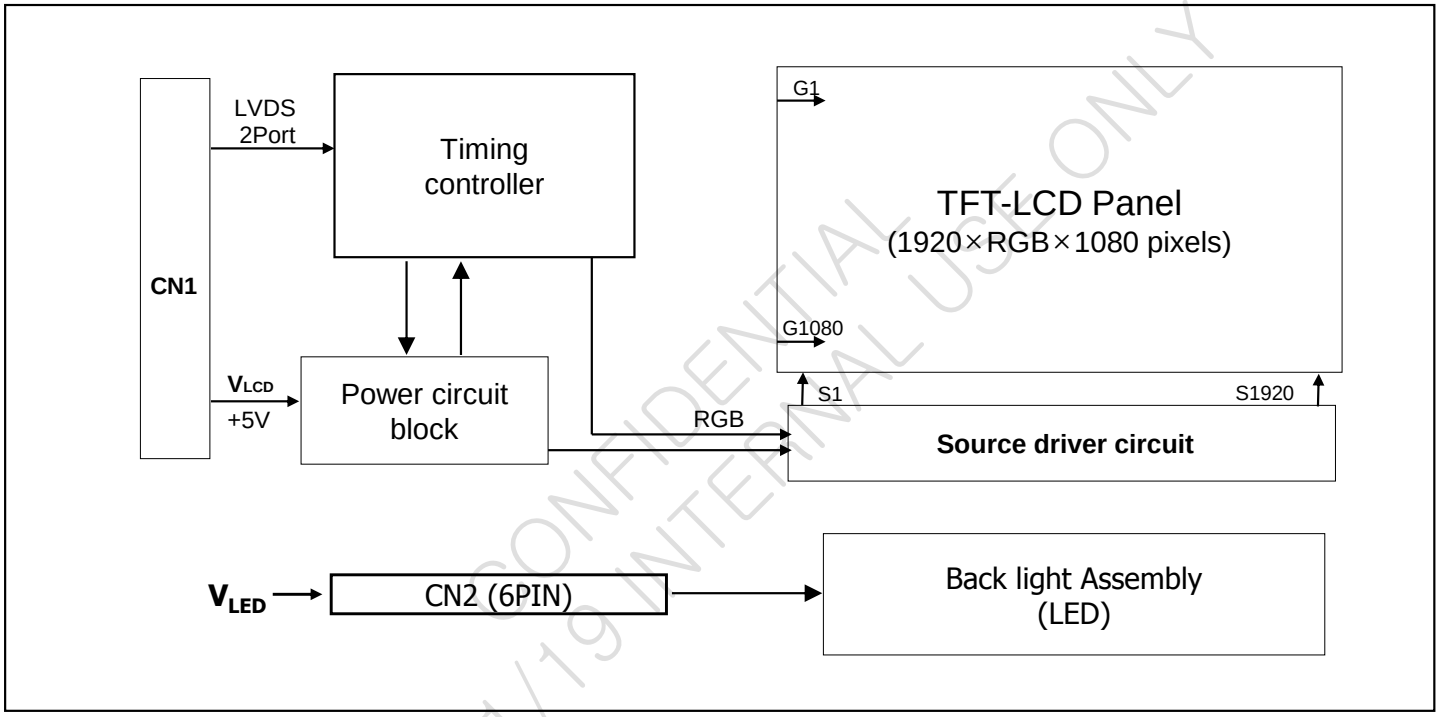

CONFIDENTIAL
2019/11/19 INTERNAL USE ONLY

[Figure 1] Block diagram

General Features

Active Screen Size	21.5 inches(54.61cm) diagonal
Outline Dimension	497.6(H) x 292.2(V) x 10.5(D) mm
Pixel Pitch	0.08265*RGB(H)mm x 0.24795(V)mm
Pixel Format	1920 horiz. By 1080 vert. Pixels RGB stripes arrangement
Color Depth	16,7M colors (6bit + A-FRC)
Luminance, White	250 cd/m^2 (Center 1 Point, Typ.)
Viewing Angle(CR>10)	View Angle Free R/L 178(Typ.), U/D 178(Typ.)
Power Consumption	Total 9.8W (Typ.) 3.0W @VLCD, 6.8W @Is=70 mA
Weight	1685g(Typ.)
Display Operating Mode	Transmissive mode, normally black
Panel Type	Reverse Type
Surface Treatment	Anti-glare treatment of the front polarizer (Haze 25%, 3H)

2. Absolute Maximum Ratings

The following are maximum values which, if exceeded, may cause faulty operation or damage to the unit.

Table 2-1. Absolute Maximum Ratings

Parameter	Symbol	Values		Units	Notes
		Min	Max		
Power Supply Input Voltage	V_{LCD}	-0.3	+6.0	V_{DC}	At 25℃
Operating Temperature	T_{OP}	0	50	℃	1,2,3
Storage Temperature	T_{ST}	-20	60	℃	
Operating Ambient Humidity	H_{OP}	10	90	%RH	
Storage Humidity	H_{ST}	10	90	%RH	
LCM Surface Temperature(Operation)	$T_{surface}$	0	65	℃	1,4

Notes:
1) Temperature and relative humidity range are shown in the figure below.
Wet bulb temperature should be 39℃ Max, and no condensation of water.
2) Maximum storage humidity is up to 40℃, 70% RH only for 4 corner light leakage mura.
3) Storage condition is guaranteed under packing condition.
4) LCM surface temperature should be measured under the condition of V_{LCD} = Typ, f_V = 60Hz, T_a = 25℃, no humidity and typical LED string current.

* f_V = Frame frequency
* T_a = Ambient temperature

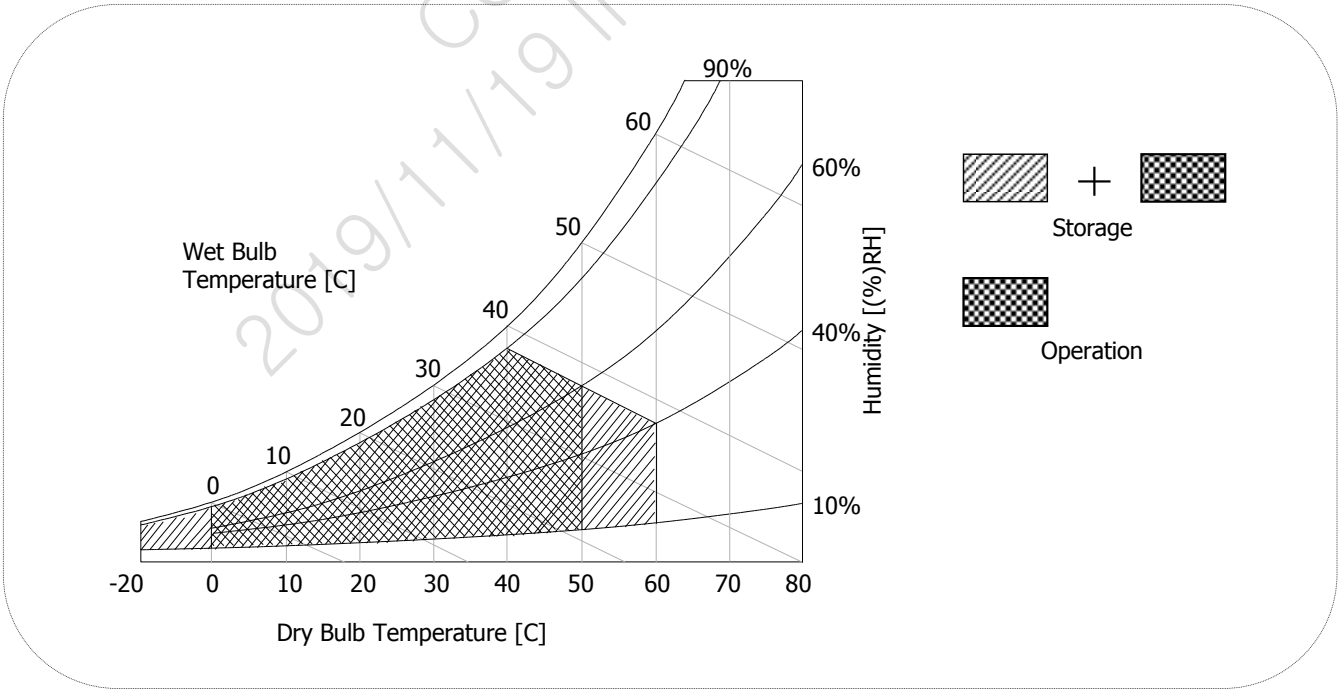

FIG.2 Temperature and relative humidity

CONFIDENTIAL
2019/11/19 INTERNAL USE ONLY

3. Electrical Specifications

3-1. Electrical Characteristics

It requires two power inputs. One is employed to power the LCD electronics and to drive the TFT array and liquid crystal. The second input power for the LED/Backlight, is typically generated by a LED Driver. The LED Driver is an external unit to the LCDs.

Table 3-1. Electrical Characteristics

Parameter	Symbol	Values			Unit	Notes
		Min	Typ	Max		
MODULE :						
Power Supply Input Voltage	V_{LCD}	4.5	5	5.5	Vdc	5
Permissive Power Input Ripple	V_{dRF}			400	mV_{p-p}	1
Power Supply Input Current	I_{LCD_Mosaic}	-	600	740	mA	2
	I_{LCD_White}	-	750	940	mA	3
Power Consumption	P_{C_Mosaic}	-	3.0	3.75	Watt	2
	P_{C_White}	-	3.8	4.7	Watt	3
Rush current	I_{RUSH}	-	-	3.0	A	4

Notes:
1) Permissive power ripple should be measured under the condition of V_{LCD} = Typ, 25±2℃, f_V = Max. Refer to page 7 for the pattern and more information.
2) The specified current and power consumption can be measured under the V_{LCD} = Typ, 25±2℃, f_V = 60Hz and the pattern should be changed according to the typical or maximum power condition. The max. current can be measured only with the maximum power pattern and the max. current is based on the peak value using oscilloscope, not the RMS value. See the page 7 for details. (Measurement condition : Sample Mode, Time division 40ms, Sampling Rate 2.5MS/s)
3) Maximum condition of inrush current: The duration of rush current is about 5ms and rising time of power input is 500us ±20%.(Min).
4) V_{LCD} level must be measured between two points on PCB of LCM V_{LCD}(test point) ~ LCM Ground. (Test condition: Maximum power pattern, 25℃, f_V = 60Hz)

* f_V = Frame frequency

2019 CONFIDENTIAL INTERNAL USE ONLY

• **Permissive Power input ripple (**V_{LCD} =5.0V, 25°C, fv (frame frequency)=MAX condition**)**

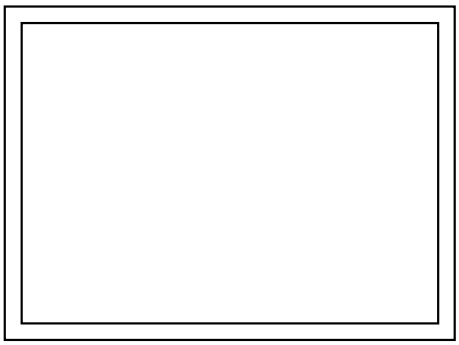

White pattern

For the exact ripple measurement, the condition of Max 20MHz is recommended in the bandwidth configuration of oscilloscope.

• **Power consumption (**V_{LCD} =5V, 25°C, fV (frame frequency=60Hz condition**)**

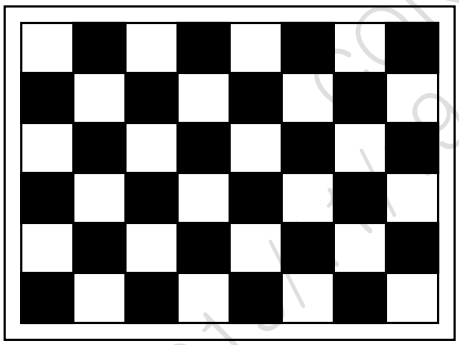

Typical power Pattern

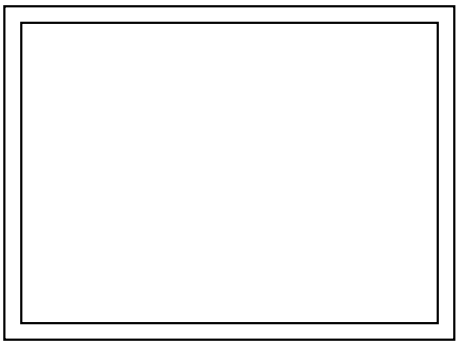

Maximum power Pattern

FIG.3-1 Mosaic Pattern & White Pattern For Power Consumption Measurement

2019 LG CONFIDENTIAL
INTERNAL USE ONLY

Table 2-2. LED Bar ELECTRICAL CHARACTERISTICS

Parameter	Symbol	Values			Unit	Notes
		Min.	Typ.	Max.		
LED String Current	Is	-	70	75	mA	1, 2
LED String Voltage	Vs	45.2	48.6	52.0	V	1, 3
Power Consumption	P_{Bar}	-	6.8	7.3	Watt	2, 5
LED Life Time	LED_LT	30,000	-	-	Hrs	4

Note : The LED Bar consists of 34 LED packages, 2 strings (parallel) x 17 packages (serial)

Notes :
1) The specified values are for single LED bar.
2) The specified current is defined as the input current for single LED string with 100% duty cycle.
3) The specified voltage is the input LED string voltage at typical current 100% duty cycle.
4) The LED life time is defined as the when brightness of LED itself reach to the 50% of initial value under the conditions at T_a = 25±2℃ and typical LED string current.
5) The power consumption shown above does not include the loss of external LED driver.
The typical power consumption is calculated as Pbar = Vs(Typ.) x Is(Typ.) x No. of strings.
The maximum power consumption is calculated as PBar = Vs(Max.) x Is(Typ.) x No. of strings.

CONFIDENTIAL
2019/11/19 INTERNAL USE ONLY

3-2. Interface Connections

3-2-1. LCD Module

- LCD Connector(CN1) : IS100-L30O-C23 (UJU)
- Mating Connector : FI-X30C2L (Manufactured by JAE) or Equivalent

Table 3-3. Module Connector(CN1) Pin Configuration

No	Symbol	Description	No	Symbol	Symbol
1	FR0M	Minus signal of odd channel 0 (LVDS)	16	SR1P	Plus signal of even channel 1 (LVDS)
2	FR0P	Plus signal of odd channel 0 (LVDS)	17	GND	Ground
3	FR1M	Minus signal of odd channel 1 (LVDS)	18	SR2M	Minus signal of even channel 2 (LVDS)
4	FR1P	Plus signal of odd channel 1 (LVDS)	19	SR2P	Plus signal of even channel 2 (LVDS)
5	FR2M	Minus signal of odd channel 2 (LVDS)	20	SCLKINM	Minus signal of even clock channel (LVDS)
6	FR2P	Plus signal of odd channel 2 (LVDS)	21	SCLKINP	Plus signal of even clock channel (LVDS)
7	GND	Ground	22	SR3M	Minus signal of even channel 3 (LVDS)
8	FCLKINM	Minus signal of odd clock channel (LVDS)	23	SR3P	Plus signal of even channel 3 (LVDS)
9	FCLKINP	Plus signal of odd clock channel (LVDS)	24	GND	Ground
10	FR3M	Minus signal of odd channel 3 (LVDS)	25	NC	No Connection (I2C Serial interface for LCM)
11	FR3P	Plus signal of odd channel 3 (LVDS)	26	NC	No Connection.(I2C Serial interface for LCM)
12	SR0M	Minus signal of even channel 0 (LVDS)	27	ITLC	Interlace mode selection
13	SR0P	Plus signal of even channel 0 (LVDS)	28	V_{LCD}	Power Supply +5.0V
14	GND	Ground	29	V_{LCD}	Power Supply +5.0V
15	SR1M	Minus signal of even channel 1 (LVDS)	30	V_{LCD}	Power Supply +5.0V

Notes:
1) All GND(ground) pins should be connected together to the LCD module's metal frame.
2) All V_{LCD}(power input) pins should be connected together.
3) All input level of LVDS signals are based on the EIA 644 standard.
4) ITLC is used for image sticking reduction in interlace mode.
(L: Normal mode, H: Interlace image sticking reduction mode)
This pin should be connected to GND in normal mode.
(Low level Input Voltage : GND ~ 0.4V, High level Input Voltage : 1.6 ~ 3.6V)

2019/11/19 CONFIDENTIAL USE ONLY



IS100-L30O-C23

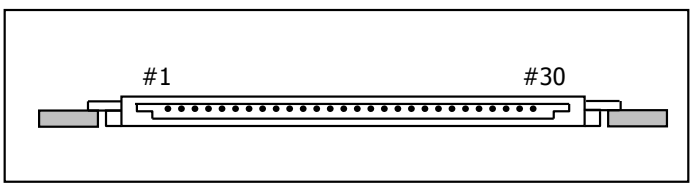

Rear view of LCM

Required signal assignment for flat link(TI:SN75LVDS83) transmitter

No	Pin Name	Required Signal	No	Pin Name	Required Signal
1	VCC	Power supply for TTL Input	29	GND	Ground pin for TTL
2	D5	TTL Input(R7)	30	D26	TTL Input(DE)
3	D6	TTL Input(R5)	31	Tx CLKIN	TTL Level clock Input
4	D7	TTL Input(G0)	32	PWR DWN	Power down Input
5	GND	Ground pin for TTL	33	PLL GND	Ground pin for PLL
6	D8	TTL Input(G1)	34	PLL VCC	Power supply for PLL
7	D9	TTL Input(G2)	35	PLL GND	Ground pin for PLL
8	D10	TTL Input(G6)	36	LVDS GND	Ground pin for LVDS
9	VCC	Power supply for TTL Input	37	Tx OUT3 +	Positive LVDS differential data output 3
10	D11	TTL Input(G7)	38	Tx OUT3 –	Negative LVDS differential data output 3
11	D12	TTL Input(G3)	39	Tx CLKOUT +	Positive LVDS differential clock output
12	D13	TTL Input(G4)	40	Tx CLKOUT –	Negative LVDS differential clock output
13	GND	Ground pin for TTL	41	Tx OUT2 +	Positive LVDS differential data output 2
14	D14	TTL Input(G5)	42	Tx OUT2 –	Negative LVDS differential data output 2
15	D15	TTL Input(B0)	43	LVDS GND	Ground pin for LVDS
16	D16	TTL Input(B6)	44	LVDS VCC	Power supply for LVDS
17	VCC	Power supply for TTL Input	45	Tx OUT1 +	Positive LVDS differential data output 1
18	D17	TTL Input(B7)	46	Tx OUT1 –	Negative LVDS differential data output 1
19	D18	TTL Input(B1)	47	Tx OUT0 +	Positive LVDS differential data output 0
20	D19	TTL Input(B2)	48	Tx OUT0 –	Negative LVDS differential data output 0
21	GND	Ground pin for TTL Input	49	LVDS GND	Ground pin for LVDS
22	D20	TTL Input(B3)	50	D27	TTL Input(R6)
23	D21	TTL Input(B4)	51	D0	TTL Input(R0)
24	D22	TTL Input(B5)	52	D1	TTL Input(R1)
25	D23	TTL Input(RSVD)	53	GND	Ground pin for TTL
26	VCC	Power supply for TTL Input	54	D2	TTL Input(R2)
27	D24	TTL Input(HSYNC)	55	D3	TTL Input(R3)
28	D25	TTL Input(VSYNC)	56	D4	TTL Input(R4)

Notes:
1) Refer to LVDS transmitter data sheet for detail description.
2) 7 means MSB and 0 means LSB at R,G,B pixel data.

CONFIDENTIAL
2019/11/19 INTERNAL USE ONLY

LVDS Input characteristics

1. DC Specification

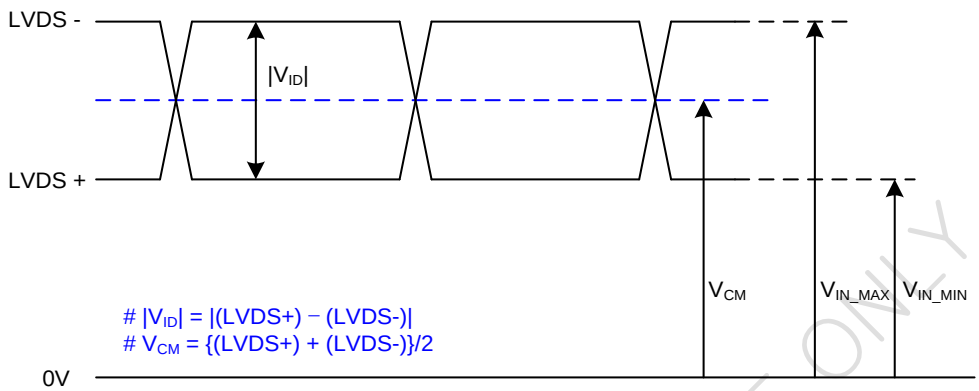

Description	Symbol	Min	Max	Unit	Notes
LVDS Differential Voltage	$\|V_{ID}\|$	200	600	mV	-
LVDS Common mode Voltage	V_{CM}	1.0	1.5	V	-
LVDS Input Voltage Range	V_{IN}	0.7	1.8	V	-
Change in common mode Voltage	ΔV_{CM}	-	250	mV	-

Notes : Dose not have any Noise & Peaking in LVDS Signal

2. AC Specification

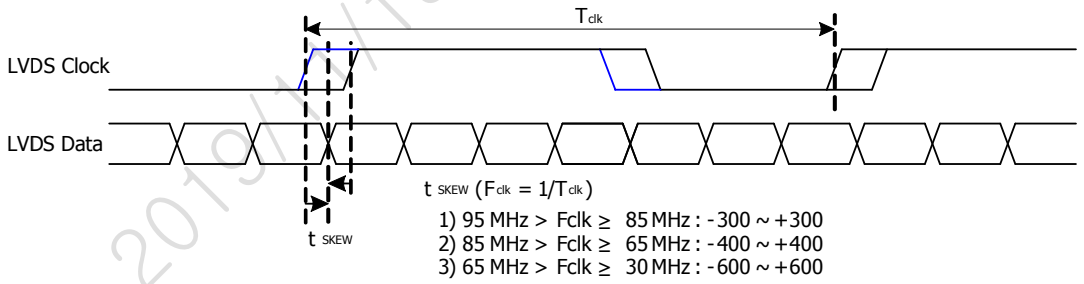

Description	Symbol	Min	Max	Unit	Notes
LVDS Clock to Data Skew Margin	t_{SKEW}	- 300	+ 300	ps	95MHz > Fclk ≥ 85MHz
	t_{SKEW}	- 400	+ 400	ps	85MHz > Fclk ≥ 65MHz
	t_{SKEW}	- 600	+ 600	ps	65MHz > Fclk ≥ 30MHz
LVDS Clock to Clock Skew Margin (Even to Odd)	t_{SKEW_EO}	- 1/7	+ 1/7	T_{clk}	-

CONFIDENTIAL
2019/11/19 INTERNAL USE ONLY

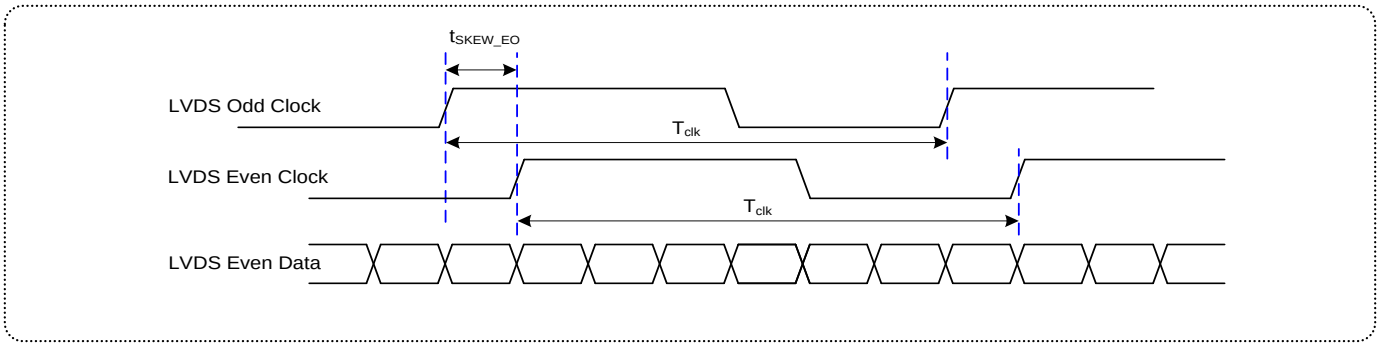

< Clock skew margin between channel >

3. Data Format

1) LVDS 2 Port

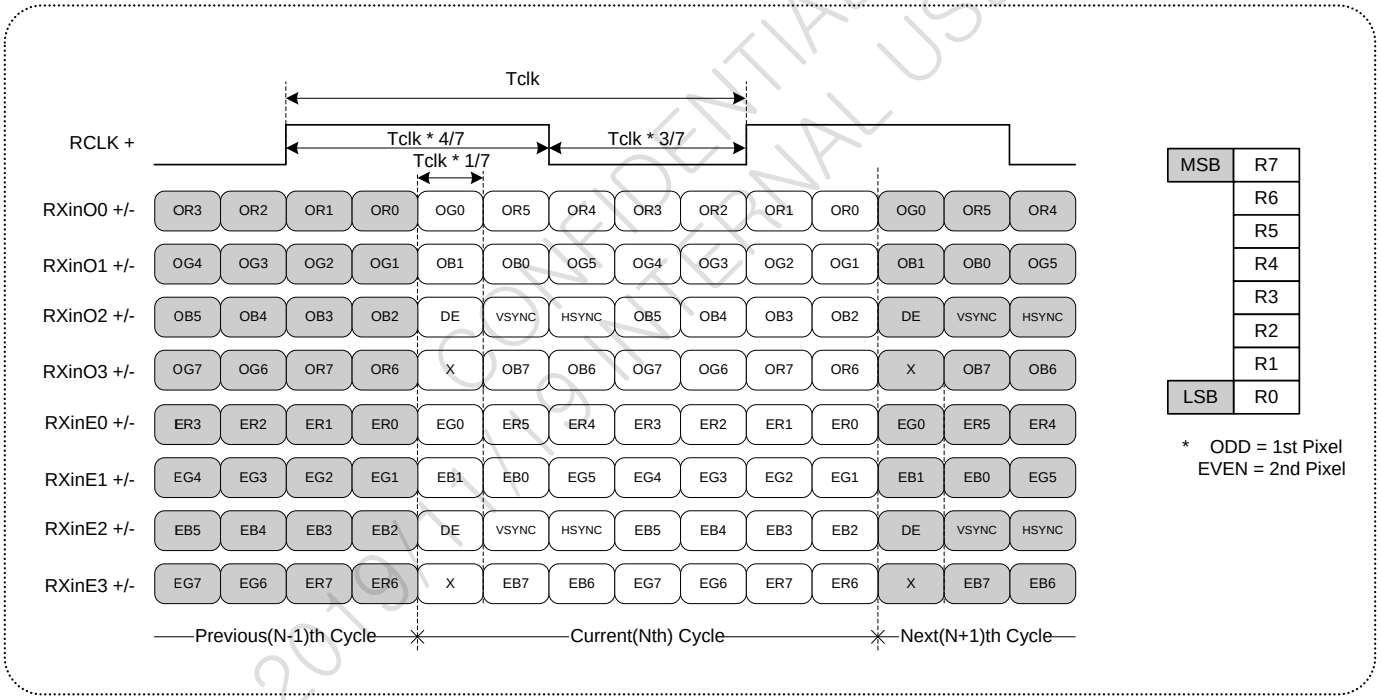

< LVDS Data Format >

2019 / 10 CONFIDENTIAL INTERNAL USE ONLY

3-2-3. Backlight Connector Pin Configuration

The LED interface connector is a model 10035WR-H06D_manufactured by YEONHO
The mating connector is a SHJP-06V-S(HF) or SHJP-06V-A-K(HF) and Equivalent.
The pin configuration for the connector is shown in the table below.

Pin	Symbol	Description	Notes
1	FB1	Channel1 Current Feedback	
2	NC	No Connection	
3	VLED	LED Power Supply	
4	VLED	LED Power Supply	
5	NC	No Connection	
6	FB2	Channel2 Current Feedback	

CONFIDENTIAL
2019/11/19 INTERNAL USE ONLY

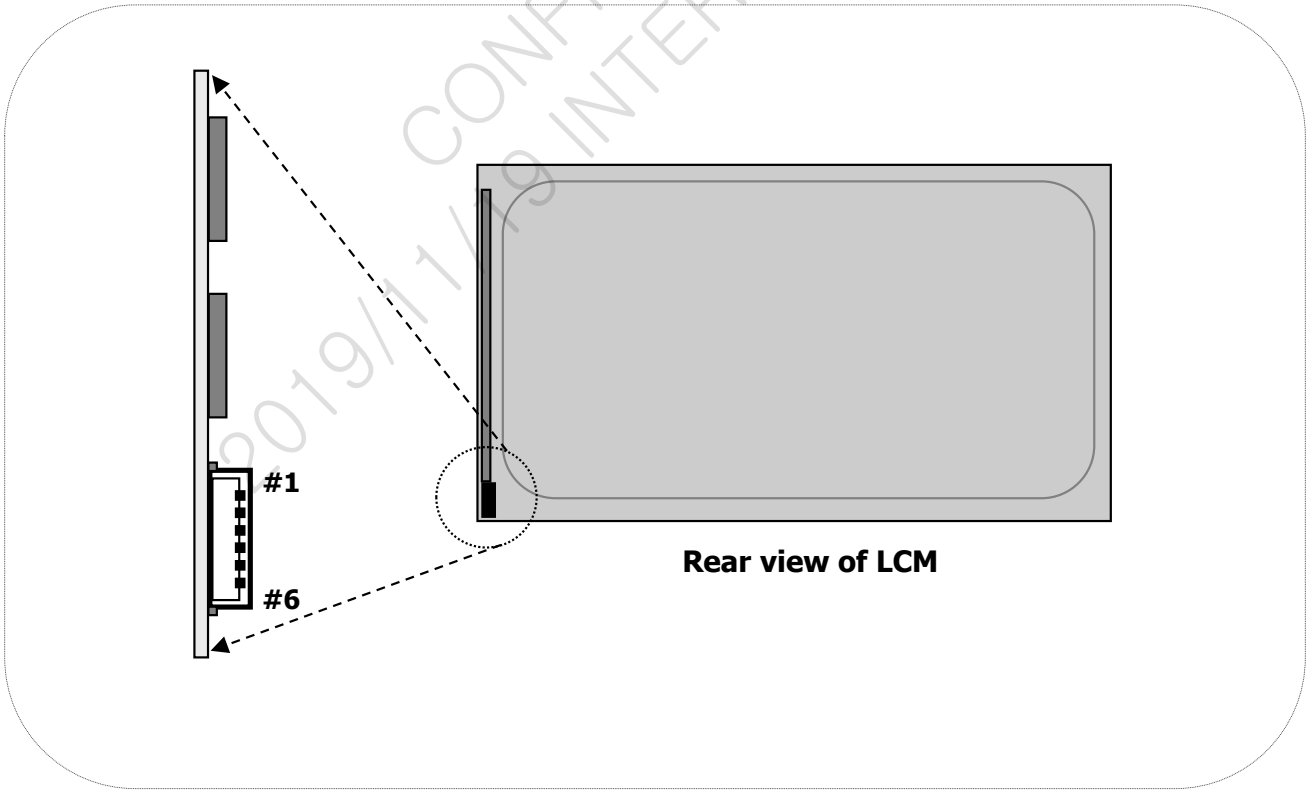

[Figure 5] Backlight connector view

3-3. Signal Timing Specifications

This is signal timing required at the input of the TMDS transmitter. All of the interface signal timing should be satisfied with the following specifications for it's proper operation.

Table 3-5. Timing Table

ITEM	Symbol		Min.	Typ.	Max.	Unit	Note
DCLK	Period	tCLK	10.53	13.89	16.7	ns	Pixel frequency Typ. 144Mhz
	Frequency	-	60	72	95	MHz	
Hsync	Period	tHP	1024	1088	1120	tCLK	1,3,4
	Horizontal Valid	tHV	960	960	960	tCLK	
	Horizontal Blank	tHB	64	128	160		
	Frequency	fH	64	66	83	KHz	
	Width	tWH	16	32	48	tCLK	
	Horizontal Back Porch	tHBP	32	48	64		
	Horizontal Front Porch	tHFP	16	48	48		
Vsync	Period	tVP	1090	1100	1965	tHP	2,4
	Vertical Valid	tVV	1080	1080	1080	tHP	
	Vertical Blank	tVB	10	20	885	tHP	
	Frequency	fV	47	60	77	Hz	
	Width	tWV	2	4	16	tHP	
	Vertical Back Porch	tVBP	5	8	32		
	Vertical Front Porch	tVFP	3	8	837		

CONFIDENTIAL
2019/11/19 INTERNAL USE ONLY

Notes :

1.The value of Hsync period, Hsync width and Hsync valid should be even number times of tCLK.
If the value is odd number times of tCLK, it can make asynchronous signal timing and cause abnormal display.

2.The performance of the electro-optical characteristics may be influenced by variance of the vertical refresh rates.

3.The value of Hsync Period, Hsync Width, and Horizontal Back Porch should be divided by 4 without a remainder.

4. The polarity of Hsync, Vsync is not restricted.

3-4. Signal Timing Waveforms

1. DCLK , DE, DATA waveforms

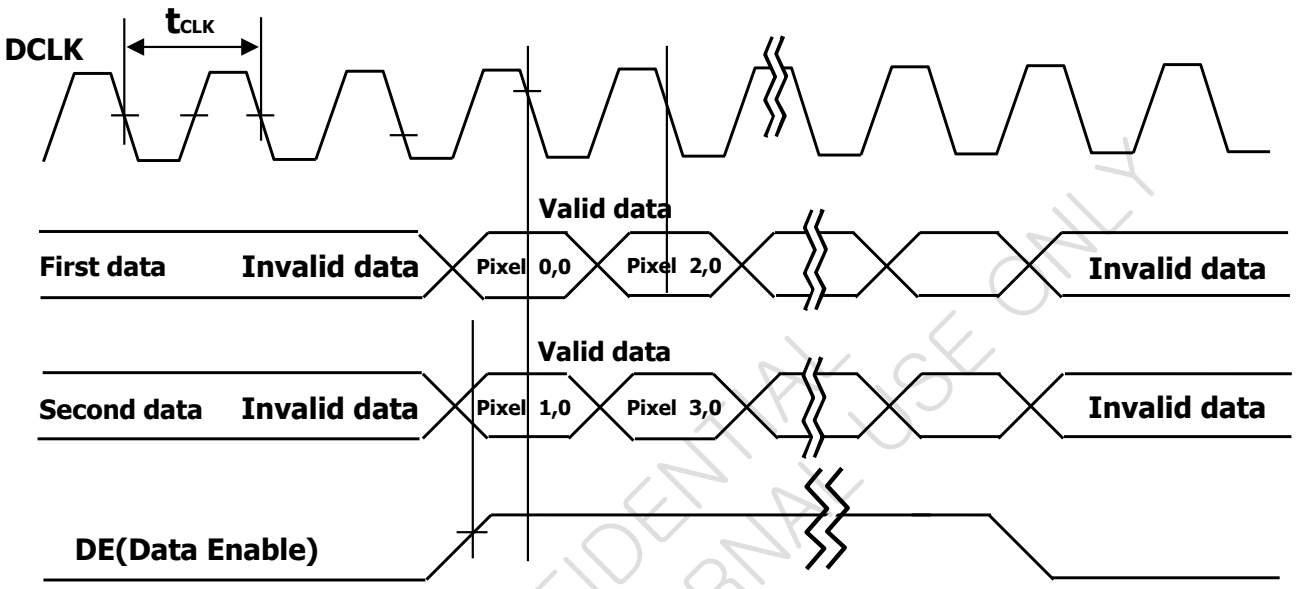

2. Horizontal waveform

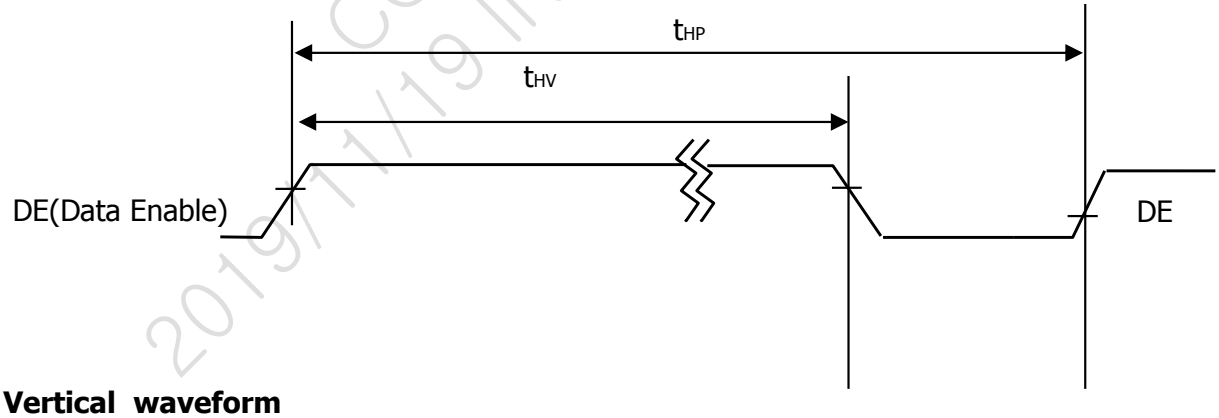

3. Vertical waveform

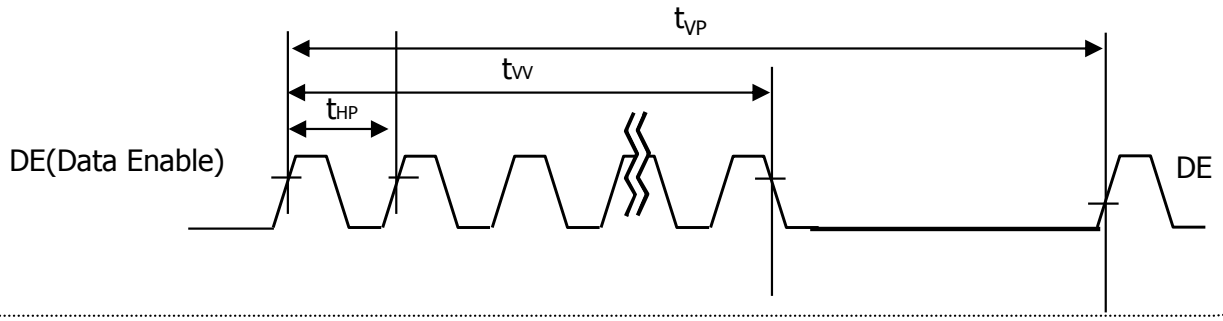

2019/11/19 CONFIDENTIAL INTERNAL USE ONLY

3-5. Color Input Data Reference

The Brightness of each primary color(red,green,blue) is based on the 8-bit gray scale data input for the color; the higher the binary input, the brighter the color. The table below provides a reference for color versus data input.

Table 3-6. Color Data Reference

Color		Input Color Data																			
		RED								GREEN								BLUE							
		MSB							LSB	MSB							LSB	MSB							LSB
		R7	R6	R5	R4	R3	R2	R1	R0	G7	G6	G5	G4	G3	G2	G1	G0	B7	B6	B5	B4	B3	B2	B1	B0
Basic Color	Black	0	0	0	0	0	0	0	0	0	0	0	0	0	0	0	0	0	0	0	0	0	0	0	0
	Red (255)	1	1	1	1	1	1	1	1	0	0	0	0	0	0	0	0	0	0	0	0	0	0	0	0
	Green (255)	0	0	0	0	0	0	0	0	1	1	1	1	1	1	1	1	0	0	0	0	0	0	0	0
	Blue (255)	0	0	0	0	0	0	0	0	0	0	0	0	0	0	0	0	1	1	1	1	1	1	1	1
	Cyan	0	0	0	0	0	0	0	0	1	1	1	1	1	1	1	1	1	1	1	1	1	1	1	1
	Magenta	1	1	1	1	1	1	1	1	0	0	0	0	0	0	0	0	1	1	1	1	1	1	1	1
	Yellow	1	1	1	1	1	1	1	1	1	1	1	1	1	1	1	1	0	0	0	0	0	0	0	0
	White	1	1	1	1	1	1	1	1	1	1	1	1	1	1	1	1	1	1	1	1	1	1	1	1
RED	RED (000) Dark	0	0	0	0	0	0	0	0	0	0	0	0	0	0	0	0	0	0	0	0	0	0	0	0
	RED (001)	0	0	0	0	0	0	0	1	0	0	0	0	0	0	0	0	0	0	0	0	0	0	0	0
	...					...							...								...				
	RED (254)	1	1	1	1	1	1	1	0	0	0	0	0	0	0	0	0	0	0	0	0	0	0	0	0
	RED (255)	1	1	1	1	1	1	1	1	0	0	0	0	0	0	0	0	0	0	0	0	0	0	0	0
GREEN	GREEN (000) Dark	0	0	0	0	0	0	0	0	0	0	0	0	0	0	0	0	0	0	0	0	0	0	0	0
	GREEN (001)	0	0	0	0	0	0	0	0	0	0	0	0	0	0	0	1	0	0	0	0	0	0	0	0
	...					...							...								...				
	GREEN (254)	0	0	0	0	0	0	0	0	1	1	1	1	1	1	1	0	0	0	0	0	0	0	0	0
	GREEN (255)	0	0	0	0	0	0	0	0	1	1	1	1	1	1	1	1	0	0	0	0	0	0	0	0
BLUE	BLUE (000) Dark	0	0	0	0	0	0	0	0	0	0	0	0	0	0	0	0	0	0	0	0	0	0	0	0
	BLUE (001)	0	0	0	0	0	0	0	0	0	0	0	0	0	0	0	0	0	0	0	0	0	0	0	1
	...					...							...								...				
	BLUE (254)	0	0	0	0	0	0	0	0	0	0	0	0	0	0	0	0	1	1	1	1	1	1	1	0
	BLUE (255)	0	0	0	0	0	0	0	0	0	0	0	0	0	0	0	0	1	1	1	1	1	1	1	1

2019/11/19 CONFIDENTIAL INTERNAL USE ONLY

3-6. Power Sequence

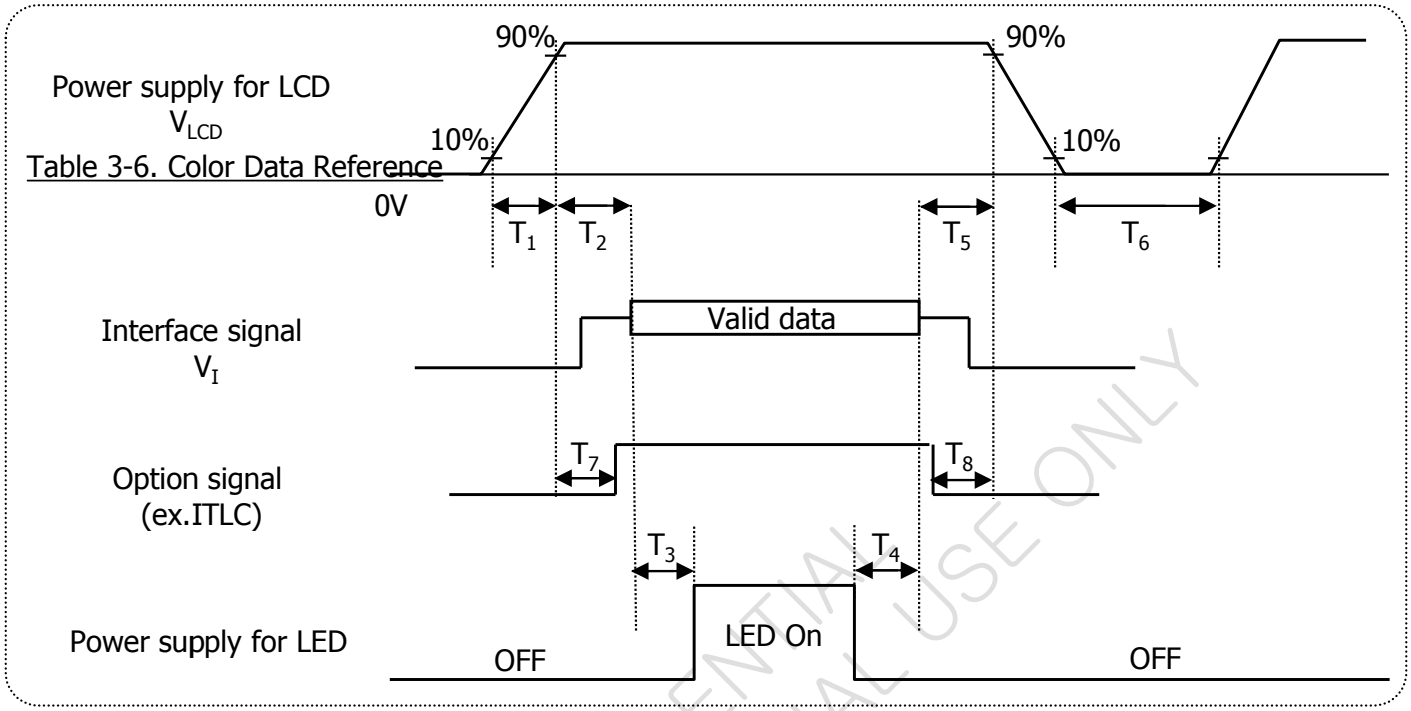

Table 3-7. Power Sequence

Parameter	Values			Units
	Min.	Typ.	Max.	
T_1	0.5	-	10	ms
T_2	0.01	-	50	ms
T_3	500	-	-	ms
T_4	200	-	-	ms
T_5	0.01	-	50	ms
T_6	1000	-	-	ms
T_7	0.5	-	T2	ms
T_8	0	-	-	ms

CONFIDENTIAL
2019/11/19 INTERNAL USE ONLY

Notes:
1) Power sequence should be kept all the time including below cases for normal operation.
   - AC/DC Power On/Off
   - Mode change (resolution, frequency, timing, sleep mode, color depth change, etc.)
   The violation of power sequence can cause a significant trouble in display and reliability.
2) Please avoid floating state of interface signal during signal invalid period.
3) When the interface signal is invalid, be sure to pull down the V_{LCD}.(0V)
4) Please turn off the power supply for LED when the level of V_{LCD} changes to prevent noise issue.
5) When measuring valid data starting point, it can be measured that LVDS signal starts swing.

3-7. V_{LCD} Power Dip Condition

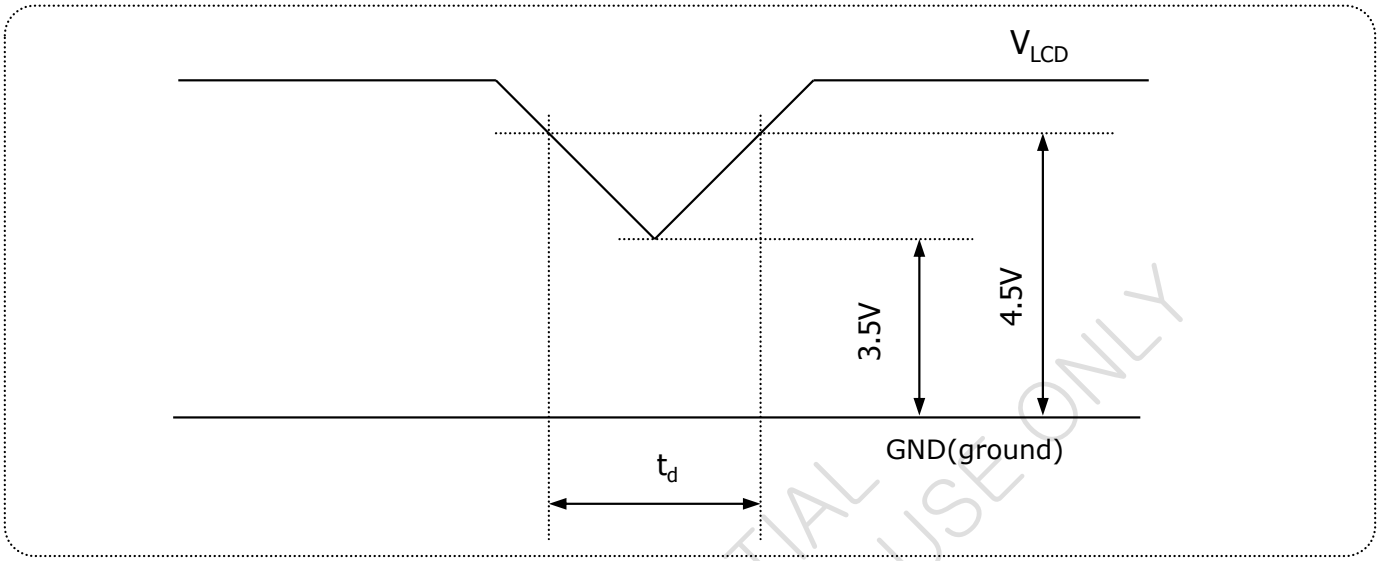

FIG.3-3 Power Dip Condition

1) Dip condition

$3.5V \leq V_{LCD} < 4.5V$, $t_d \leq 20ms$

CONFIDENTIAL
2019/11/19 INTERNAL USE ONLY

4. Optical Specifications

Optical characteristics are determined after the unit has been 'ON' for approximately 30 minutes in a dark environment at 25±2°C. The values specified are at an approximate distance 50cm from the LCD surface at a viewing angle of Φ and θ equal to 0 ° and aperture 1 degree.
FIG. 1 presents additional information concerning the measurement equipment and method.

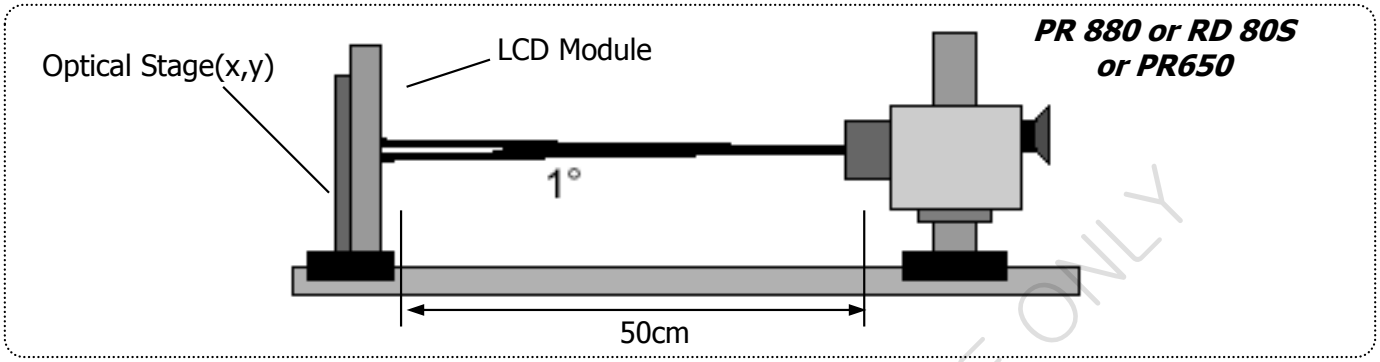

FIG.7 Optical Characteristic Measurement Equipment and Method

Table 4-1. Optical Characteristics

(T_a=25 ℃, V_{LCD}=Typ, f_V=60 Hz, DCLK=Typ, I_S=Typ)

Parameter		Symbol	Values			Units	Notes
			Min.	Typ.	Max.		
Contrast Ratio		CR	700	1000	-		1
Surface Luminance, white		L_{WH}	200	250	-	cd/m^2	2
Luminance Variation		δ_{WHITE}	75	-	-	%	3
Response Time	Gray to Gray	T_{GTG_AVR}	-	14	25	ms	4
Color Coordinates [CIE 1931] ***(By PR650)***	Red	Rx	Typ -0.03	0.660	Typ +0.03		
		Ry		0.332			
	Green	Gx		0.330			
		Gy		0.612			
	Blue	Bx		0.150			
		By		0.060			
	White	Wx		0.313			
		Wy		0.329			
Color Temperature		-	-	6500	-	K	
Viewing Angle (CR>10, General)	Horizontal	θ_H	170	178	-	Degree	5
	Vertical	θ_V	170	178	-		
Gray Scale		-		2.2			6

CONFIDENTIAL
2019/11/19 INTERNAL USE ONLY

Notes:

1) **Contrast Ratio(CR)** is defined mathematically as: ***(By PR880)***
It is measured at center point(1)

$$\text{Contrast ratio} = \frac{\text{Surface luminance with all white pixels}}{\text{Surface luminance with all black pixels}}$$

2) **Surface Luminance(L_{WH})** is the luminance value at center 1 point(1) across the LCD surface 50cm from the surface with all pixels displaying white. For more information see FIG.4-1. ***(By PR880)***

3) The **Variation in Surface Luminance** , δ_{WHITE} is defined as: ***(By PR880)***

$$\delta_{WHITE} = \frac{\text{Minimum}(L_{P1}, L_{P2}, \ldots, L_{P9})}{\text{Maximum}(L_{P1}, L_{P2}, \ldots, L_{P9})} \times 100(\%)$$

Where L1 to L9 are the luminance with all pixels displaying white at 9 locations.
For more information see FIG.4-2.

<Measuring Point For Luminance Variation> **<Measuring Point For Surface Luminance>**

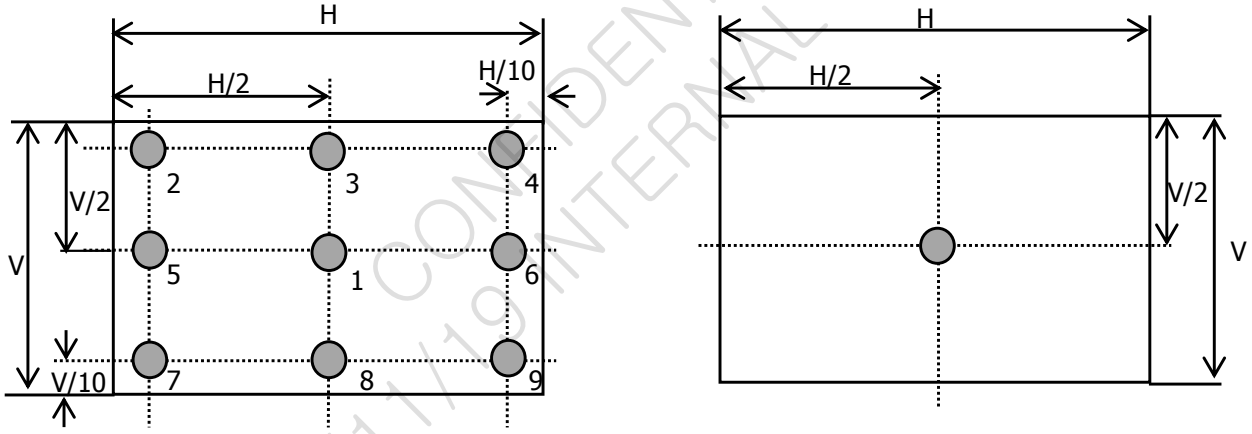

@ H,V: Active Area

FIG.4-2 Measure Point for Luminance

CONFIDENTIAL
2019/11/19 INTERNAL USE ONLY

Notes:

4) The **Gray To Gray Response Time** is defined as the following figure and shall be measured by switching the input signal for "Gray To Gray ". ***(By RD80S)***
   - Gray step: 5 Step
   - T_{GTG_AVR} is the total average time at rising time and falling time for "Gray To Gray ".
   - For the GTG measurement, the sampling rate of oscilloscope is 500k/s.

Table 4-2. GTG Gray

Gray to Gray		Rising Time				
		G255	G191	G127	G63	G0
Falling Time	G255					
	G191					
	G127					
	G63					
	G0					

Response Time is defined as the following figure and shall be measured by switching the input signal for "Gray(N)" and "Gray(M)".

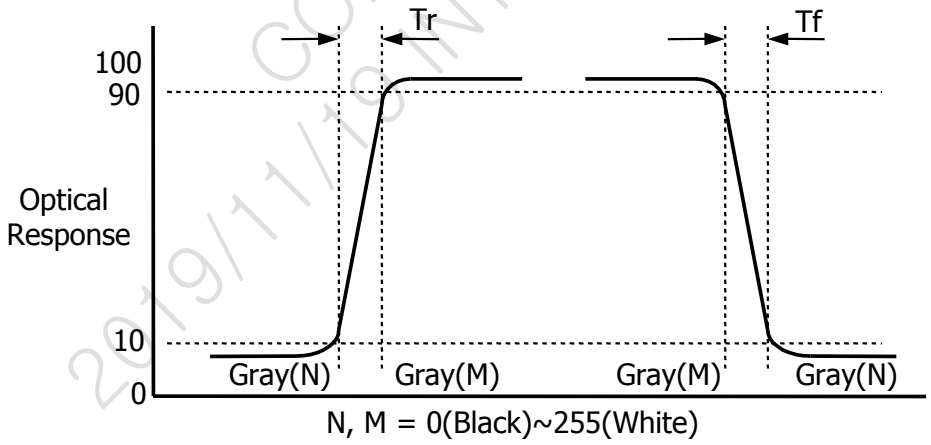

FIG.4-3 Response Time

CONFIDENTIAL
2019/11/15 INTERNAL USE ONLY

Notes:

5) **Viewing Angle** is the angle at which the contrast ratio is greater than 10. The angles are determined for the horizontal or x axis and the vertical or y axis with respect to the z axis which is normal to the LCD surface. For more information see FIG.4-4. ***(By PR880)***

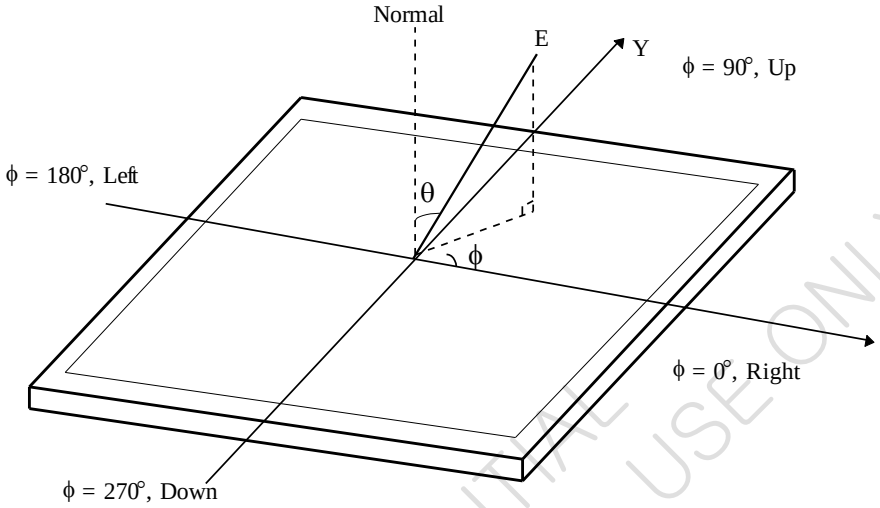

FIG.4-4 Viewing Angle

6) **Gamma Value** is approximately 2.2. For more information see below table.

Table 4-3. Gray Scale Specification

Gray Level	Relative Luminance [%](Typ)
0	0.1
15	0.3
31	1.08
47	2.5
63	4.72
79	7.7
95	11.49
111	16.2
127	21.66
143	28.2
159	35.45
175	43.8
191	53.0
207	63.3
223	74.48
239	86.8
255	100

CONFIDENTIAL
2019/11/19 INTERNAL USE ONLY

5. Mechanical Characteristics

The contents provide general mechanical characteristics. In addition the figures in the next page are detailed mechanical drawing of the LCD.

Outline Dimension	Horizontal	497.6mm
	Vertical	292.2mm
	Depth	10.5 mm
Bezel Area	Horizontal	479.8mm
	Vertical	271.3mm
Active Display Area	Horizontal	476.064 mm
	Vertical	267.786 mm
Weight	1685 g(Typ.), 1770 g(Max.)	
Surface Treatment	Anti-glare treatment of the front polarizer (Haze 25%, 3H)	

Note: Please refer to a mechanical drawing in terms of tolerance at the next page.
- Outline dimensions (horizontal, vertical and outside depth) are measured by using vernier calipers.
- The inside depth dimensions are measured by using height gauge, when LCM is put face down onto a flat surface.

CONFIDENTIAL
2019/11/19 INTERNAL USE ONLY

<FRONT VIEW>

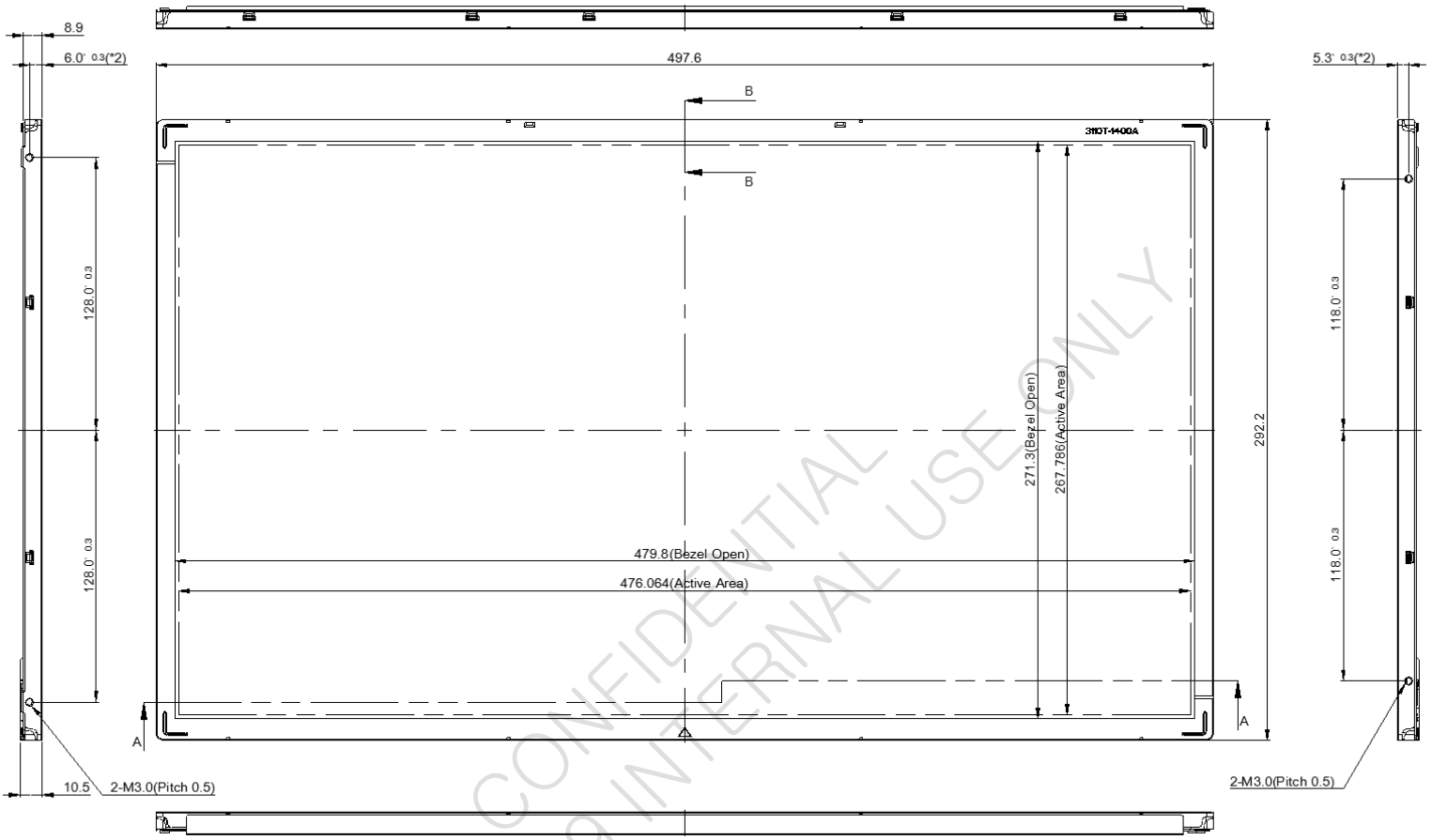

CONFIDENTIAL
2019/11/19 INTERNAL USE ONLY

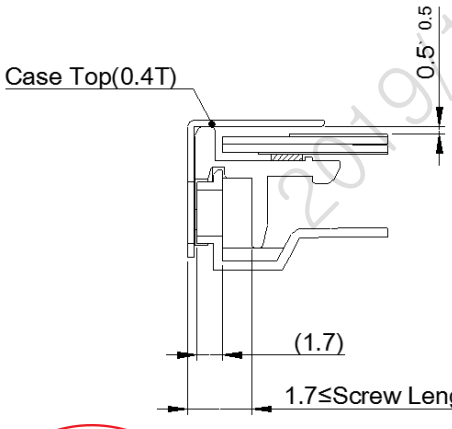

SECTION A-A
SCALE 2/1

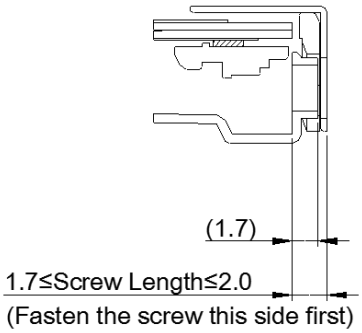

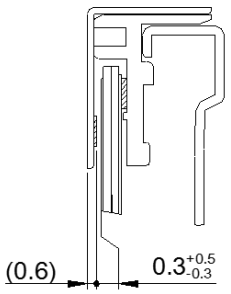

SECTION B-B
SCALE 2/1

開發部
2022.03.21
發行
廣輝科技開發股份有限公司

<REAR VIEW>

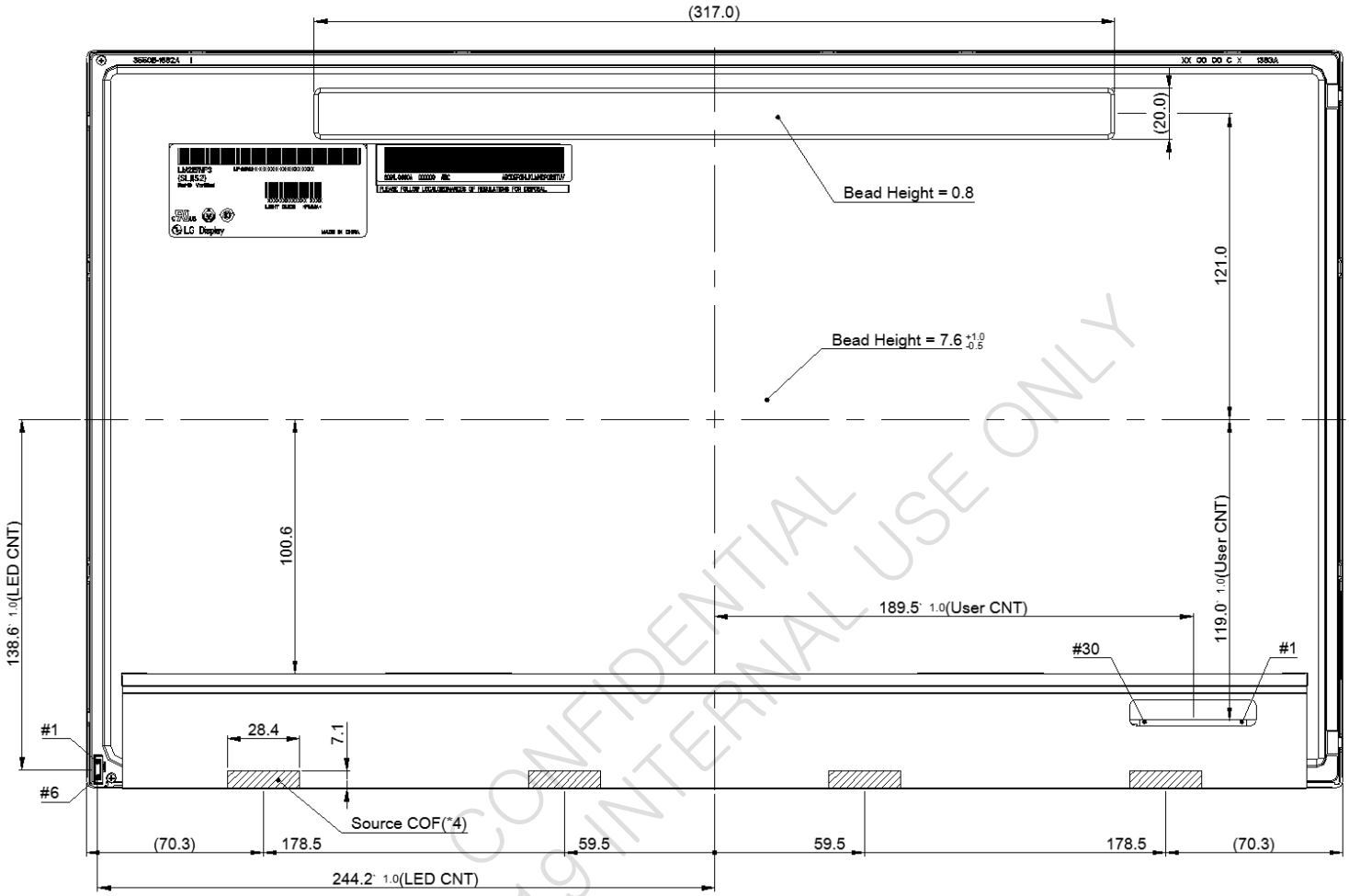

CONFIDENTIAL
INTERNAL USE ONLY
2019/11/19

Notes
1. Unspecified tolerances are to be ± 0.5
2. Tilt and partial disposition tolerance of display area are as following.
   (1) Y-direction : I A-B I ≤ 1.0
   (2) X-direction : I C-D I ≤ 1.0

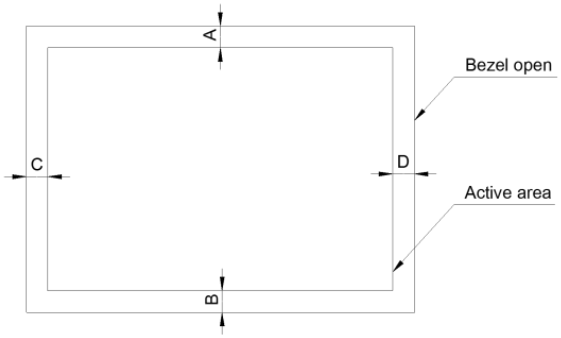

3. Torque of User Hole(Mount) : 3.0 ~4.0kgf.cm
4. I/F Connector Specification : IS100-L300-C23(UJU)
5. LED Connector Specification : 10035WR=H06D(HF)
6. The COF area is weak & sensive, so please don't press the COF area

開發部
2022.03.21
發行
群華科技開發股份有限公司

LGD Highly recommendation :
As The IPS panel is sensitive & slim, please recommend the metal frame of the system supports the panel by the double side-mount.

6. Reliability

Environment test condition

No	Test Item	Condition	Notes
1	High temperature storage test	T_a = 60℃, 240h	1
2	Low temperature storage test	T_a = -20℃, 240h	1
3	High temperature operation test	T_a = 50℃, 50%RH, 240h	1
4	Low temperature operation test	T_a = 0℃, 240h	1
5	Humidity condition operation	T_a = 40℃, 90%RH	1
6	Vibration test (non-operating)	Waveform : Random Vibration level : 1.0Grms Bandwidth : 10-300Hz Duration : X,Y,Z, 10min One time each direction	
7	Shock test (non-operating)	Shock level : 100G Waveform : Half sine wave, 2ms Direction : ±X, ±Y, ±Z One time each direction	
8	Altitude Operating Storage / Shipment	 0 - 10,000 feet (3,048m) 0 - 40,000 feet (12,192m)	
9	Maximum storage humidity for 4 corner light leakage Mura	Max 70%RH, T_a = 40℃	

Note 1) Result Evaluation Criteria:
TFT-LCD panels test should take place after cooling enough at room temperature.
In the standard condition, there should be no particular problems that may affect the display function.

* T_a= Ambient Temperature

2019/11/19 CONFIDENTIAL INTERNAL USE ONLY

7. International Standards

7-1. Safety

a) UL 60950-1, Underwriters Laboratories Inc.
Information Technology Equipment - Safety - Part 1 : General Requirements.
b) CAN/CSA-C22.2 No. 60950-1-07, Canadian Standards Association.
Information Technology Equipment - Safety - Part 1 : General Requirements.
c) EN 60950-1, European Committee for Electrotechnical Standardization (CENELEC).
Information Technology Equipment - Safety - Part 1 : General Requirements.
d) IEC 60950-1, The International Electrotechnical Commission (IEC).
Information Technology Equipment - Safety - Part 1 : General Requirements

7-2. Environment

a) RoHS, Directive 2011/65/EU of the European Parliament and of the council of 8 June 2011

CONFIDENTIAL
2019/11/19 INTERNAL USE ONLY

8. Packing

8-1. Designation of Lot Mark

a) Lot Mark

A	B	C	D	E	F	G	H	I	J	K	L	M

A,B,C : SIZE(INCH)
D : YEAR
E : MONTH
F ~ M : SERIAL NO.

Note

1. YEAR

Year	2011	2012	2013	2014	2015	2016	2017	2018	2019	2020
Mark	A	B	C	D	E	F	G	H	J	K

2. MONTH

Month	Jan	Feb	Mar	Apr	May	Jun	Jul	Aug	Sep	Oct	Nov	Dec
Mark	1	2	3	4	5	6	7	8	9	A	B	C

b) Location of Lot Mark

Serial No. is printed on the label. The label is attached to the backside of the LCD module.
This is subject to change without prior notice.

CONFIDENTIAL
2019/11/19 INTERNAL USE ONLY

8-2. Packing Form

a) LCM quantity in one box : 12ea(2 Module is packed in 1 Al Bag)
LCM quantity in one Pallet : 216ea
b) Box Size : 365mm X 315mm X 568mm
C) Pallet Ass'y Size: 1140mmX990mmX1,258mn

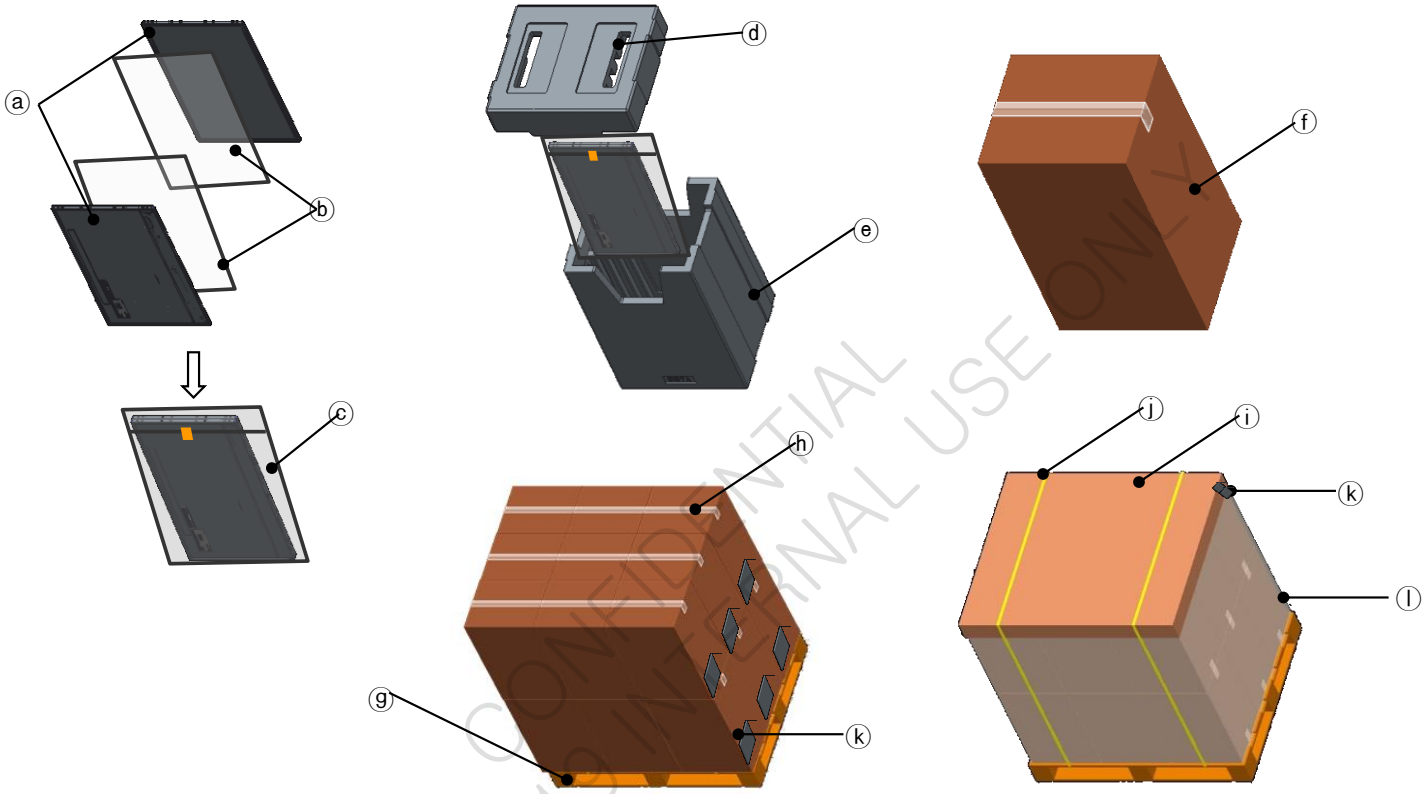

CONFIDENTIAL
2019/11/19 INTERNAL USE ONLY

No.	Description	Material
ⓐ	LCM	-
ⓑ	Protect film	OPP
ⓒ	AL-Bag	AL
ⓓ	Packing,Top	EPS
ⓔ	Packing,Bottom	EPS
ⓕ	Box	Paper(SW)
ⓖ	Pallet	Plywood
ⓗ	Tape	OPP
ⓘ	Angle Cover	Paper(SW)
ⓙ	BAND	PP
ⓚ	LABEL	YUPO PAPER
ⓛ	Wrap	-

9. PRECAUTIONS

Please pay attention to the followings when you use this TFT LCD module.

9-1. MOUNTING PRECAUTIONS

(1) You must mount a module using holes arranged in four corners or four sides.
(2) You should consider the mounting structure so that uneven force (ex. Twisted stress) is not applied to the module. And the case on which a module is mounted should have sufficient strength so that external force is not transmitted directly to the module.
(3) Please attach the surface transparent protective plate to the surface in order to protect the polarizer. Transparent protective plate should have sufficient strength in order to the resist external force.
(4) You should adopt radiation structure to satisfy the temperature specification.
(5) Acetic acid type and chlorine type materials for the cover case are not desirable because the former generates corrosive gas of attacking the polarizer at high temperature and the latter causes circuit break by electro-chemical reaction.
(6) Do not touch, push or rub the exposed polarizers with glass, tweezers or anything harder than HB pencil lead. And please do not rub with dust clothes with chemical treatment.
Do not touch the surface of polarizer for bare hand or greasy cloth.(Some cosmetics are detrimental to the polarizer.)
(7) When the surface becomes dusty, please wipe gently with absorbent cotton or other soft materials like chamois soaks with petroleum benzene. Normal-hexane is recommended for cleaning the adhesives used to attach front / rear polarizers. Do not use acetone, toluene and alcohol because they cause chemical damage to the polarizer.
(8) Wipe off saliva or water drops as soon as possible. Their long time contact with polarizer causes deformations and color fading.
(9) Do not open the case because inside circuits do not have sufficient strength.
(10) As The IPS panel is sensitive & slim, please recommend the metal frame of the system supports the panel by the double side-mount.

2019/11/19 CONFIDENTIAL INTERNAL USE ONLY

9-2. Operating Precautions

1) Response time depends on the temperature.(In lower temperature, it becomes longer.)
2) Brightness depends on the temperature.(In higher temperature, it becomes lower.) And in lower temperature, response time(required time that brightness is stable after turned on) becomes longer.
3) Be careful for condensation at sudden temperature change. Condensation makes damage to polarizer or electrical contacted parts. And after fading condensation, smear or spot will occur.
4) When fixed patterns are displayed for a long time, remnant image is likely to occur.
5) Module has high frequency circuits. Sufficient suppression to the electromagnetic interference shall be done by system manufacturers. Grounding and shielding methods may be important to minimized the interference.
6) Please do not give any mechanical and/or acoustical impact to LCM. Otherwise, LCM can't be operated its full characteristics perfectly.
7) A screw which is fastened up the steels should be a machine screw.(if not, it causes metallic foreign material and deal LCM a fatal blow)
8) Please do not set LCD on its edge.
9) When LCMs are used for public display, defects such as Yogore & image sticking can not be guaranteed.
10) LCMs cannot support "Interlaced Scan Method"
11) When this reverse model is used as a forward-type model (PCB on top side) or a Portrait-type mode at storage and operation, LGD can not guarantee any defects of LCM.
12) Please conduct image sticking test after 2-hour aging with Rolling Pattern at normal temperature.(25~40℃)

9-3. Electrostatic Discharge Control

Since a module is composed of electronic circuits, it is not strong to electrostatic discharge. Make certain that treatment persons are connected to ground through wrist band etc. And don't touch interface pin directly.

9-4. Precautions For Strong Light and Hazardous Materials Exposure

Strong light exposure causes degradation of polarizer and color filter.
The LCM should be avoided direct contact with hazardous materials such as sulfur, acetic acid, chlorine, etc. These materials may cause chemical reaction such as sulfurization, corrosion, discoloration, etc.

9-5. Storage

When storing modules as spares for a long time, the following precautions are necessary.

1) Store them in a dark place. Do not expose the module to sunlight or fluorescent light. Keep the temperature between 5℃ and 35℃ at normal humidity.
2) The polarizer surface should not come in contact with any other object.
   It is recommended that they be stored in the container in which they were shipped.

9-6. Handling Precautions For Protection Film

1) The protection film is attached to the bezel with a small masking tape. When the protection film is peeled off, static electricity is generated between the film and polarizer. This should be peeled off slowly and carefully by people who are electrically grounded and with well ion-blown equipment or in such a condition, etc.
2) When the module with protection film attached is stored for a long time, sometimes there remains a very small amount of glue still on the bezel after the protection film is peeled off.
3) You can remove the glue easily. When the glue remains on the bezel surface or its vestige is recognized, please wipe them off with absorbent cotton waste or other soft material like chamois soaked with normal-hexane.

2019/11/28 CONFIDENTIAL INTERNAL USE ONLY

Incoming Inspection Standard

Model : MNT General IIS

Customer :

DATE : 28th Dec , 2018

Prepared by : Y M Park (Manager) — Y M Park

Checked by : JT TAK (G.Manager) — 卓

Approved by : J. W. Bae (G.Manager)

Customer's Approval

Reviewed & Approved by

(NAME) .....

(TITLE) .....

(Signature) .....

(Date) .....

開發部 2022.03.21 發行

Please (return / keep) this standard with your signature for approval

Rev.1.0 28/Dec/2018									

Copyright LG Display Co., LTD. 2018

LG Display

Contents

Revision Status 3

1.0. Introduction
1.1. Scope 4
1.2. Incoming Inspection Right 4
1.3. Handling Precautions 4

2.0. Generals
2.1. Sampling Method 5
2.2. Acceptable Quality Level (AQL) 5
2.3. Classification of defects 5
2.4. Determination of acceptability and subsequent disposal 5
2.5. Inspection Method 6

3.0. Inspection Criteria
3.1. Dot Defect 7
3.2. Polarizer Defect 7
3.3. Foreign Material 8
3.4. Line Defect 8
3.5 Bezel Appearance 8
3.6. Others 8

4.0. RMAs
4.1. Verification 9
4.2. Supplier Induced Defects 9
4.3. Customer Induced Defects 9

5.0. Warranty
5.1. Warranty Period 10
5.2. Repair Warranty 10
5.3. Warranty avoidance 10

6.0. Others 10

Appendix A 11

Rev.1.0 28/Dec/2018									

Copyright LG Display Co., LTD. 2018

Revision Status

Rev. No.	Chapter	Contents	Date	Issued & amended by
1.0	All	MNT General IIS	28/Nov/18	JW Yun
1.1	3.1	Add Partial BD with 64 Gray	02/Dev/18	YM Park

Copyright LG Display Co., LTD. 2018

1.0 Introduction

1.1. Scope

This Incoming Inspection Standard shall be applied to TFT-LCD modules (hereafter called the "LCMs") supplied by LG Display (hereafter called the "Supplier") to its Customer.

1.2. Incoming inspection Right

The Customer shall have the right to conduct at its own cost and expense, an incoming inspection of the LCMs at the destination specified in the relevant B/L(Bills of Lading) in accordance with the LCM's specifications separately agreed upon and the inspection criteria set forth in this article.

The Customer shall notify the Supplier in writing of the inspection results (acceptance or rejectance) in accordance with the said Incoming Inspection Standard within 40 days from the date of the B/L.

Should the Customer fail to notify the results to Supplier within 40 days period, the right to reject the LCMs shall then lapse, and the said LCMs shall be deemed to have been accepted by the Customer.

1.3. Handling Precautions

- LCM Devices are made of fragile material such as Glass and plastic and may be broken or cracked if dropped it, so **PLEASE** handle them with care.
- **DO NOT** press the area covered with PET or such materials. These are weak point of LCMs since of TCPs(Driver ICs) and PWBs.
- **PLEASE** support the Bezel with your finger when connecting the interface cable.
- Please **DO NOT** touch the surface of the Glass(Polarizer).
- **PLEASE** wear the Wrist Strap when handling.
  Semiconductive devices are included in the LCMs and they should be handled with care to prevent any electrostatic discharge(ESD).
- **PLEASE** keep the LCMs in the specified, original packing boxes when storage.
- **DO NOT** stack the LCMs too high without wrapping material such as AIR CAP.
- Before use the LCMs, **PLEASE** check the Engineering specification.
- LCMs contain a small amount of Liquid Crystal and Mercury. **PLEASE** follow local ordinances or regulations for disposal.

Copyright LG Display Co., LTD. 2018

2.0 Generals

2.1. Sampling Method

Unless otherwise agreed upon in writing, the sampling inspection shall be applied to the Customer's incoming inspection.

2.1.1. Lot size : Quantity per shipment lot (minimum lot size : 100 pieces)
2.1.2. Sampling type : Normal inspection, Single sampling
2.1.3. Inspection level : II
2.1.4. Sampling table : MIL-STD-105D

2.2. Acceptable Quality Level(AQL)

The AQL for major and minor defects shall be respectively set forth below.

2.2.1. **Major = 0.65 %**
2.2.2. **Minor = 1.5 %**

2.3. Classification of defects

Defects are classified as either a major defect or a minor defect based on the degree of defect defined herein.

2.2.1. Major defect
The major defect is a defect that is likely to result in product failure, or reduction in the product's intended usage.

2.2.2. Minor defect
The minor defect is a defect that has little bearing on the effective use or operation of the product.

Specific criteria of judgment of major and/or minor defects or other related issues shall be in accordance with the Appendix A, "Classification of Defects".

2.4. Determination of acceptability and subsequent disposal

If the number of defects found in the LCM sampling lot is equal to or less than the AQL(Acceptable Quality Level), the lot shall be accepted.

If the number of defects found in the LCM sampling lot is greater than the AQL, the lot shall be rejected. The Customer shall inform the Supplier of the results of such inspection detailly within the time period stipulated in chapter 1.2. "Incoming inspection Right".

Copyright LG Display Co., LTD. 2018

2.4.1. Accepted lot

An acceptance under the above incoming inspection shall constitute an acceptance by the Customer of such lot of the LCMs in terms of the landed quality thereof.

2.4.2. Rejected lot

If a shipment lot of products is rejected under the above incoming inspection due to any defects of which the Supplier is responsible and such a fact is clearly confirmed by the Supplier through a separate inspection or as otherwise decided, the Supplier shall choose one of the following three options which must be determined by mutual consent.

The Supplier shall advise the Customer of its choice not later than 10 working days(Monday through Friday) of receipt of the "Customer's notification of rejected lot" :

a. The Customer shall return the rejected lot to the place to be designated by the Supplier and the Supplier shall screen all of the products in the lot and repair or replace the defective LCMs.

b. The Supplier shall screen all of the LCMs in the lot and repair or replace the defective LCMs within a reasonable time period at the Customer's facility.

c. The Customer shall screen the entire lot of LCMs at the expense of Supplier's, and the expense must be agreed by the Supplier. The rejected LCMs shall be returned to the place designated by the Supplier.

2.5. Inspection Method

2.5.1. Ambient conditions

a. Temperature : **20~25℃**
b. Humidity : **65 ±10 % RH**
c. Illumination : **Single 20W fluorescent lamp non-directive (300 to 700 Lux) Using Daylight type fluorescent light Under Max 300Lux for Verifying Dot defects)**

2.5.2. Viewing distance
The distance between the LCM and the inspector's eyes shall be at least 35-50㎝.

2.5.3. Viewing Angle

The inspection shall be conducted within normal viewing angle range.
※ Refer to the CAS for viewing angle.
(The surface of the MODULE and the eyes of the inspectors shall be 90 degrees.

Copyright LG Display Co., LTD. 2018

3.0 Inspection Criteria

3.1. Dot Defect

3.1.1. Bright Dot
Dots(sub-pixels) which appeared brightly in the screen when the LCM displayed only with Full Black pattern.

- R, G,B 1 dot ---------- 2 Max
- Adjacent 2 dots ---------- 1 Max
- Total amount of Bright dots ---------- 2 Max
- Minimum distance of Bright dots ---------- 15mm

3.1.2. Partial bright dot with 64 Gray.
- Partial bright dot (tiny dot) ---------- 8 Max

3.1.3. Dark Dot
Dots(sub-pixels) which appeared darkly in the screen when the LCM displayed with Full Red, Green and Blue patterns.

- 1 dot ---------- 5 Max
- Adjacent 2 dots ---------- 2 Max
- Total amount of Dark dot ---------- 5 Max
- Minimum distance of Dark dots ---------- 15 mm

3.1.4. Total amount of Dot Defects ---------- 5 Max (Combination)

Note) a. Every dot herein means Sub-Pixel(Each Red,Green, or Blue Color)
b. Bright dot defect damaged less than half size of sub-pixel is not counted as a bright dot defect. And dark dot defect damage less than half size of sub-pixel is not counted as a dark dot defect.
c. Dots darker than half brightness of sub-pixel are not defined as bright dot defect and dots brighter than half brightness of sub-pixel are not defined as dark dot defect.

3.2. Polarizer Defects

Items	Criteria
Scratches	0.05<=W<=0.1, 0.3<=L<=3.0, N<=3
Dent/Bubble	D<=0.7, N<=3

Where, W :Width
L : Length
D : Average diameter =(a+b)/2

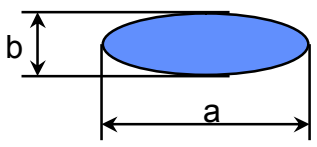

Note)
a. Average Diameter
b. Linear : a ＞2b , Circular : a≤2b

Rev.1.0 28/Dec/2018									

Copyright LG Display Co., LTD. 2018

Note) continued

c. Extraneous substances which can be wiped out, like Finger Print, Particles, are not considered as a defect.
b. Defects which is on the Black Matrix(outside of Active Area) are not considered as a defect.

3.3 Foreign Material

Items	Criteria
Linear	0.05<=W<=0.2, 0.5<=L<=3.0, N<=3
Circular	0.1<=D<=0.7, N<=4

Where, W :Width
L : Length
D : Average diameter =(a+b)/2

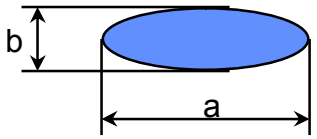

Note)
a. Average Diameter
b. Linear : a ＞2b , Circular : a≤2b

3.4. Line Defect

All kinds of line defects such as vertical, horizontal or cross are not allowed.

3.5. Bezel Appearance

Scratches, minor bents, stains, particles on the Bezel frame are not considered as a defect.

3.6. Other Visual Defects

3.6.1 Mura
No visible mura is allowed. A limit sample shall be used when necessary.

3.6.2 Light leakage
Light leakage in the active area is not allowed. A limit sample shall be used when necessary.

3.7. Others

Issues which is not defined in this criteria shall be discussed with both parties, Customer and Supplier, for better solution.

Copyright LG Display Co., LTD. 2018

4.0 RMAs

4.1. Verification

The Supplier can verify the defective LCMs to segregate the responsibilities at Customer's facility or can request the Customer to ship the defective LCMs to assigned place for verification

This verification result shall be agreed mutually by the Customer and Supplier. This result can be corrected/changed after detail failure analysis at Supplier's facilities.

4.2. Supplier Induced Defects

All of the Supplier induced defective LCMs shall be returned to the Supplier for repair or replacement.

Before return the defective LCMs, the Customer needs Supplier's confirmation with RMA Number.

All of the returned LCMs shall be returned to the Customer within agreed time period.

4.3. Customer Induced Defects

The Customer can return the customer induced defective LCMs to the Supplier for repair.

The repair cost for Customer induced defective LCMs shall be agreed with both parties, Customer and Supplier.

Copyright LG Display Co., LTD. 2018

5.0 Warranty

5.1. Warranty Period

In-warranty period is **Eighteen(18)** Months from manufacturing month of LCM.

Note) The manufacturing Month is on the LCMs as Supplier's serial No.

5.2. Repair Warranty

Repair warranty is **Twelve(12)** Months from repaired month for repaired LCMs.

Note) The Label for repair will be added after repairing.

5.3. Warranty avoidance

The warranty will be avoided in cases of below,

a. When the warranty period is expired
b. The Customer induced defective LCMs
c. When the LCMs were repaired by 3rd party without Supplier's approval.
d. When the LCMs were treated like Disassemble and Rework by the Customer and/or Customer's representatives without Supplier's approval.

6. Others

If any problems arise with the LCMs supplied by supplier, the Customer and Supplier will cooperate and make efforts to solve it with mutual confidence and respect.

Copyright LG Display Co., LTD. 2018

Appendix A. Classification of Defects

Defect Mode	Criterion for Defect	Class
Operating Frequency	Specified range in the CAS	Major
Power Consumption	Specified range in the CAS	Major
Contrast Ratio	Specified range in the CAS	Major
Line Defect	Not allowed any Vertical,Horizontal,and Cross line	Major
Polarizer Defects	Shall be accordance with the item 3.0 "Inspection Criteria" in this standard	Minor
Extraneous Substance	Shall be accordance with the item 3.0 "Inspection Criteria" in this standard	Minor
Dot Defect	Shall be accordance with the item 3.0 "Inspection Criteria" in this standard	Minor
Bezel Claw Forming	The bezel claw is not formed sufficiently	Minor

Copyright LG Display Co., LTD. 2018