SPECIFICATION

[ ] Preliminary Specification
[◉] Final Specification

Description **21.5” 1920xRGBx1080 TFT-LCD Module**

Part Number **C2150FHF1ME01**

3TFTLCD2110 (Z0559)

Customer		Industrial Product Dept, PDBU Tianma Microelectronics Co., Ltd.	
Signatures	Date	Approved By Jian.Kang	Date 20250624
		Reviewed By Fengjian.Zhu	20250624
		Prepared By Ziyao.Tian	20250624
Comments:			

設計驗證 工程課 2026-07-03 發行 天馬科技開發股份有限公司

* This cover page is for your Comments and Signatures back to TIANMA.

ALL RIGHT RESERVED

REVISION HISTORY

Rev	Date	Page	Revision Items	Editor
2.0	2025/4/8		Final SPEC released.	Kun.Liu
2.1	2025/5/28	P.2&P.4 P.12&P.15	Update LCM Outline Backlight connector Type Adjust Response Time Adjust Update Mechanical drawing	Ziyao.Tian
2.2	2025/6/24	P.15	Update Mechanical drawing	Ziyao.Tian

CONTENTS

1. SUMMARY 1
1.1 General Description 1
1.2 Features 1

2. GENERAL SPECIFICATIONS 2

3. INPUT / OUTPUT TERMINALS 3
3.1 CN1 Pin assignment (LCD Interface) 3
3.2 CN2 Pin assignment (Back Light) 4
3.3 Pin arrangement of socket 4

4. ABSOLUTE MAXIMUM RATINGS 5

5. ELECTRICAL CHARACTERISTICS 5
5.1 DC Characteristics for Panel Driving 5
5.2 DC Characteristics for Backlight Driving 6
5.3 LCD Module Block Diagram 7

6. INTERFACE TIMING CHARACTERISTICS 8
6.1 LVDS DC Electrical Characteristics 8
6.2 LVDS AC Electrical Characteristics 8
6.3 Timing Characteristics 10
6.4 Input Signal Timing Chart 10
6.5 Input Data Mapping 11
6.6 POWER on/off 11

7. OPTICAL CHARACTERISTICS 12

8. MECHANICAL DRAWING 15

9. RELIABILITY TEST 16

10. PACKING INSTRUCTION 17

11. PRECAUTIONS FOR USE OF LCD MODULES 18
11.1 Handling Precautions 19
11.2 Storage precautions 19
11.3 Transportation Precautions 19
11.4 Screen saver Precautions 19
11.5 Safety Precautions 19

1. Summary

1.1 General Description

This is a 21.5 inch a-Si TFT-LCD module with normal-black technology. It is composed of a TFT-LCD panel, PCB, and a LED backlight unit.

1.2 Features

- Ultra-wide viewing angle
- High contrast ratio
- Interface: 2 port LVDS

2. General Specifications

Feature		Spec	Unit
Display Spec	Size	21.5 inches	
	Resolution	1920(RGB)x1080	
	Pixel Pitch	0.24795 (H)X0.24795 (V)	mm
	TFT Active Area	476.06 (H)x267.79 (V)	mm
	Technology Type	a-Si	
	Pixel Configuration	R.G.B Vertical Stripe	
	Display Mode	SFT	
	Surface Treatment	AG 25%	
Mechanical Characteristics	LCM (W x H x D)	(495.6) (W) X(292.2) (H) X(8.9) (D) mm (typ.)without PCB (495.6) (W) X(292.2) (H) X (12.35) (D) mm (typ.)with PCB	mm
	Weight	1681.4	g
Optical Characteristics	Luminance	350	cd/m2
	Contrast Ratio	1500:1	
	NTSC	72	%
	Viewing Angle	89/89/89/89	degree
Electrical Characteristics	Interface	LVDS interface (2 port)	
	Color Depth	16.7M（8-bit）	color
	Power Consumption	LCD:4; Backlight: 11.52 typ;	W

Table 2.1 General Specifications

3. Input / Output Terminals

3.1 CN1 Pin assignment (LCD Interface)

Connector Information	
LCD Module connector	STM:MSBKT2407P30HB

Table 3.1.1 Connector information

Pin No.	Symbol	Signal	Remarks
1	ORX0-	-LVDS differential data input	I
2	ORX0+	+LVDS differential data	I
3	ORX1-	-LVDS differential data input	I
4	ORX1+	+LVDS differential data	I
5	ORX2-	-LVDS differential data input	I
6	ORX2+	+LVDS differential data	I
7	GND	Power Ground	P
8	ORXC-	-LVDS differential clk input	I
9	ORXC+	+LVDS differential clk	I
10	ORX3-	-LVDS differential data input	I
11	ORX3+	+LVDS differential data	I
12	ERX0-	-LVDS differential data input	I
13	ERX0+	+LVDS differential data	I
14	GND	Power Ground	P
15	ERX1-	-LVDS differential data input	I
16	ERX1+	+LVDS differential data	I
17	GND	Power Ground	P
18	ERX2-	-LVDS differential data input	I
19	ERX2+	+LVDS differential data	I
20	ERXC-	-LVDS differential clk input	I
21	ERXC+	+LVDS differential clk	I
22	ERX3-	-LVDS differential data input	I
23	ERX3+	+LVDS differential data	I
24	GND	Power Ground	P
25	NC	Keeping Dummy	-
26	NC	Keeping Dummy	-
27	NC	Keeping Dummy	-
28	VLCD_5V	Power supply（5V）	P
29	VLCD_5V	Power supply（5V）	P
30	VLCD_5V	Power supply（5V）	P

Table 3.1.2 Pin Assignment for LCD Interface

Note1: I/O definition: I---Input, O---Output, P---Power/Ground, N---No connection

Note2: All of the GND pins should be connected to the system ground.

3.2 CN2 Pin assignment (Back Light)

Connector Information	
LCD Module connector	A1009AWRR-06-C1MB-R-H

Table 3.2.1 Connector information

Pin No.	Symbol	Function	Description
1	Ch1	LED Current Feedback Terminal(Channel1)	
2	Ch2	LED Current Feedback Terminal(Channel2)	
3	VSLED	LED Power Supply Voltage Input Terminal	
4	VSLED	LED Power Supply Voltage Input Terminal	
5	Ch3	LED Current Feedback Terminal(Channel3)	
6	Ch4	LED Current Feedback Terminal(Channel4)	

Table 3.2.2 Pin Assignment for Back Light Interface

3.3 Display direction

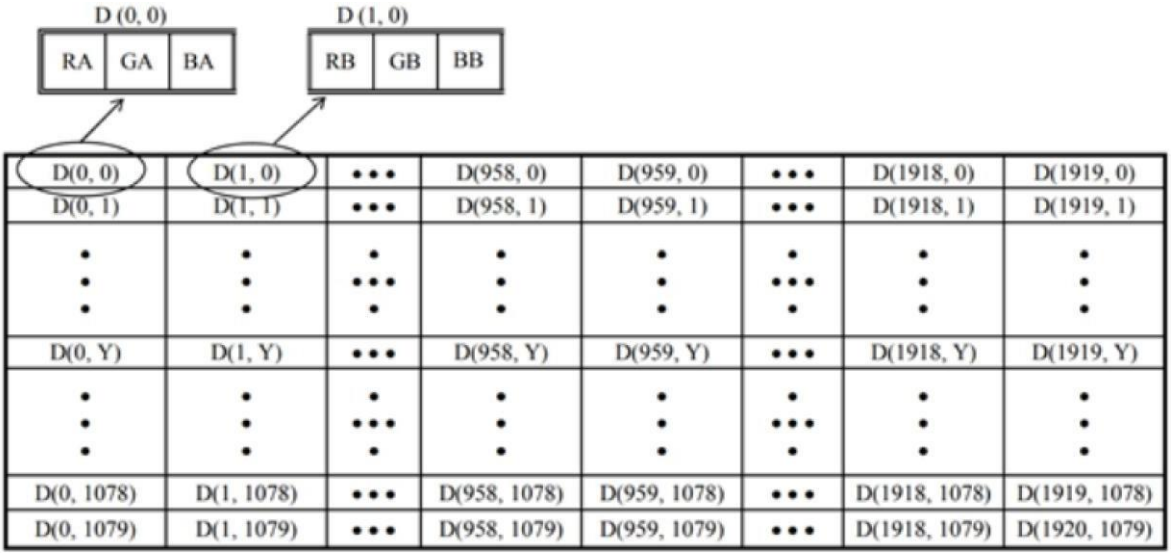

Figure 3.3.1 Pixel arrangement



Figure 3.3.2 Display direction

Note1: The pixel arrangement is RGB and display direction is shown as above when PCB on underside.

4. Absolute Maximum Ratings

GND=0V

Parameter		Symbol	Rating	Unit	Remarks
Power supply voltage	LCD panel signal processing board	VLCD_5V	-0.3 to +15.0	V	Ta= 25°C
Input voltage for signals	LCD panel signal processing board Note1	Vi	-0.3 to +2.8	V	VDD= 5.0V Ta= 25°C
Operation temperature		Top	0 to +60	°C	-
Storage temperature		Tst	-20 to +60	°C	-

Note1: ORX n+/-, ERXn+/-

5. Electrical Characteristics

5.1 DC Characteristics for Panel Driving

(Ta= 25°C)

Parameter	Symbol	Min.	Typ.	Max.	Unit	Remarks
Power supply voltage	VLCD_5V	4.5	5.0	5.5	V	-
Power supply current	IDD	-	300	900	mA	at VDD=5.0V Note1,2
Permissible ripple voltage	VRP	-	-	200	mVp-p	for VDD Note3,4,5
Differential input threshold voltage	High	VTH	-	-	+100	mV
Logic-Low Output Voltage	Low	VTL	-100	-	-	mV

Table 5.1 LCD Module Electrical Characteristics

Note1: Write pattern [by IEC 61747-6]
Note2: Reload pattern for maximum current
Note3:This product works even if the ripple voltage levels are over the permissible values, but there might be noise on the display image.
Note4: The permissible ripple voltage includes spike noise.
Note5: The load variation influence does not include.

5.2 DC Characteristics for Backlight Driving

Item	Symbol	Min.	Typ.	Max.	Unit	Remarks
Forward Current	IF	--	60	--	mA	64LEDs（16s4p）
Forward Current Voltage	VF	--	3.0	--	V	
Backlight Power Consumption	WBL	--	11520	--	mW	
LED life time	--	30000		-	Hrs	

Table 5.2.1 LED Backlight Characteristics

Note1: I F is defined for each channel.
Note2: Optical performance should be evaluated at Ta=25℃ only.
Note3: If LED is driven by high current, high ambient temperature & humidity condition, The life time of LED will be reduced.
Note4: Operating life means brightness goes down to 50% of initial brightness. Typical operating life time is estimated data.

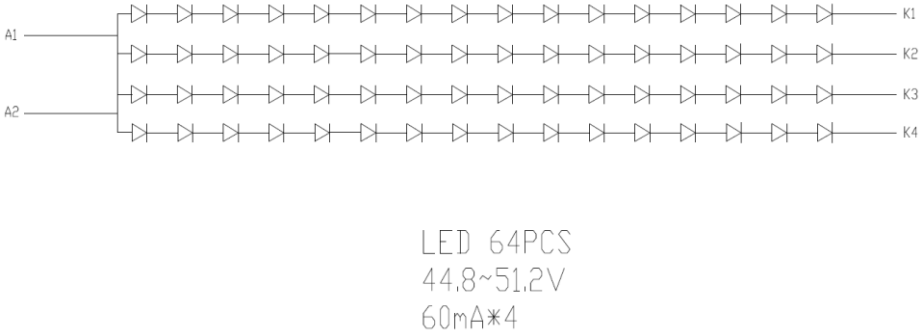

Note:

1）. The LED lifetime is defined as the module brightness decay 50% of original brightness at Ta=25 degree.

2）. Environmental conditions such as sustained high operating temperatures, high humidity, operating conditions and other factors have an adverse effect on LED Lifetime. It is difficult to characterize LED lifetime for all the various operational, environmental and design permutations possible. Numerous environmental conditions such as ambient temperature, humidity and ventilation have impact on LED brightness decay. Brightness decay is also affected by control, thermal management, current levels, and other electrical design considerations.

3）. The TM Minima value of LED Lifetime is estimated to be "30,000hrs" which is based on non-full life testing and our supplier's data. Full life testing for LEDs is impractical due to the long expected lifetime. Even with 24/7 operation, testing an LED for 20,000 hours would take 2.3 years, and such an endeavor is impractical because technology continues to develop and evolve so quickly, products would be obsolete by the time life testing is completed. Results based on actual usage environment may vary. This means that TM shall not be held liable for any problems related to LED life time that do not meet TM typical value from the use of TM's module.

5.3 LCD Module Block Diagram

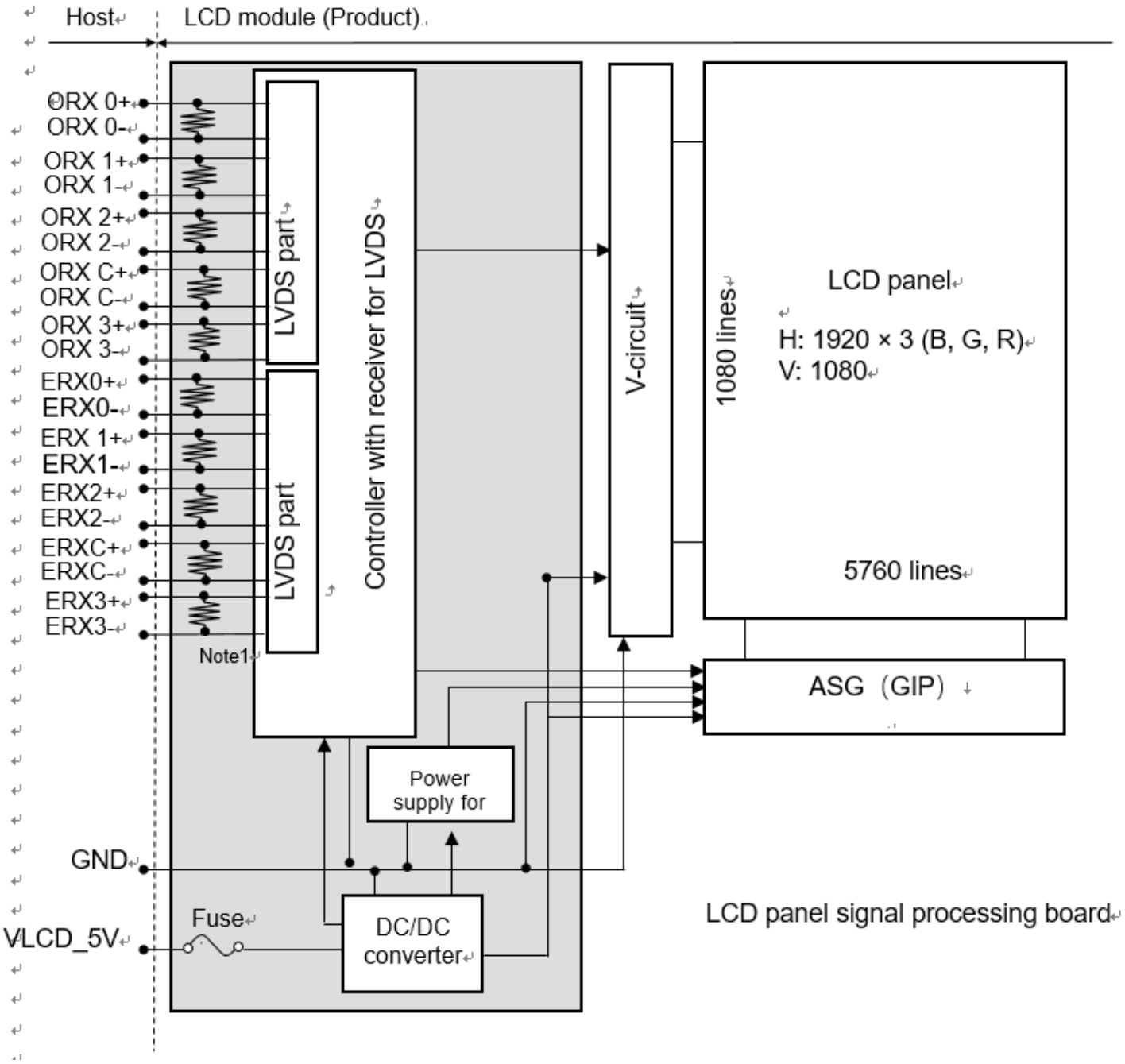

Note1:The terminating resistan （typ:100Ω）of the LVDS signal lines is inside TCON

Note2: Relations between GND (Signal ground), FG (Frame ground) and GNDB (LED driver ground)

GND - FG	Connected
GND - GNDB	Connected
FG - GNDB	Connected

6. Interface Timing Characteristics

6.1 LVDS DC Electrical Characteristics

Parameter	Symbol	Condition	Min.	Typ.	Max.	Unit
Differential input high threshold voltage	R_{xVTH}	R_{xVCM} =1.2 V	+100	-	-	mV
Differential input low threshold voltage	R_{xVTL}		-	-	-100	mV
Input voltage range (singled-end)	R_{xVIN}		0	-	2.4	V
Fail safe				0.3		V
Differential input voltage	$\|V_{ID}\|$		100	-	600	mV
Input common mode voltage	R_{xVCM}	V_{DD} = 2.5V	0.6	0.8	1.6	V
		V_{DD} = 3.3V	1.0	1.2	2.4 -$\|V_{ID}\|$/2	V
Differential input voltage	$\|V_{ID}\|$		100	-	600	mV
Differential input leakage current	RV_{xLIK}		-10	-	+10	uA
Internal terminate resistor	R_{int}		80	100	120	Ω

6.2 LVDS AC Electrical Characteristics

Parameter	Symbol	Condition	Min.	Typ.	Max.	Unit
Clock frequency	R_{xFCLK}			74. 25		MHz
Input data Position0	tRIP1		-|tRMG|	0.0	|tRMG|	ns
Input data Position1	tRIP0		T/7-|tRMG|	T/7	T/7+|tRMG|	ns
Input data Position2	tRIP6		2T/7-|tRMG|	2T/7	2T/7+|tRMG|	ns
Input data Position3	tRIP5		3T/7-|tRMG|	3T/7	3T/7+|tRMG|	ns
Input data Position4	tRIP4		4T/7-|tRMG|	4T/7	4T/7+|tRMG|	ns
Input data Position5	tRIP3		5T/7-|tRMG|	5T/7	5T/7+|tRMG|	ns
Input data Position6	tRIP2		6T/7-|tRMG|	6T/7	6T/7+|tRMG|	ns
Input data skew margin	T_{RSKM}	R_{xCLK} = 85MHz R_{xVTH} – R_{xVTL} =200 mV	-450	-	+450	ps
Input spread spectrum ratio	SS_R		-	-	+/-3	%
Input modulation frequency	F_M		-	-	200k	Hz

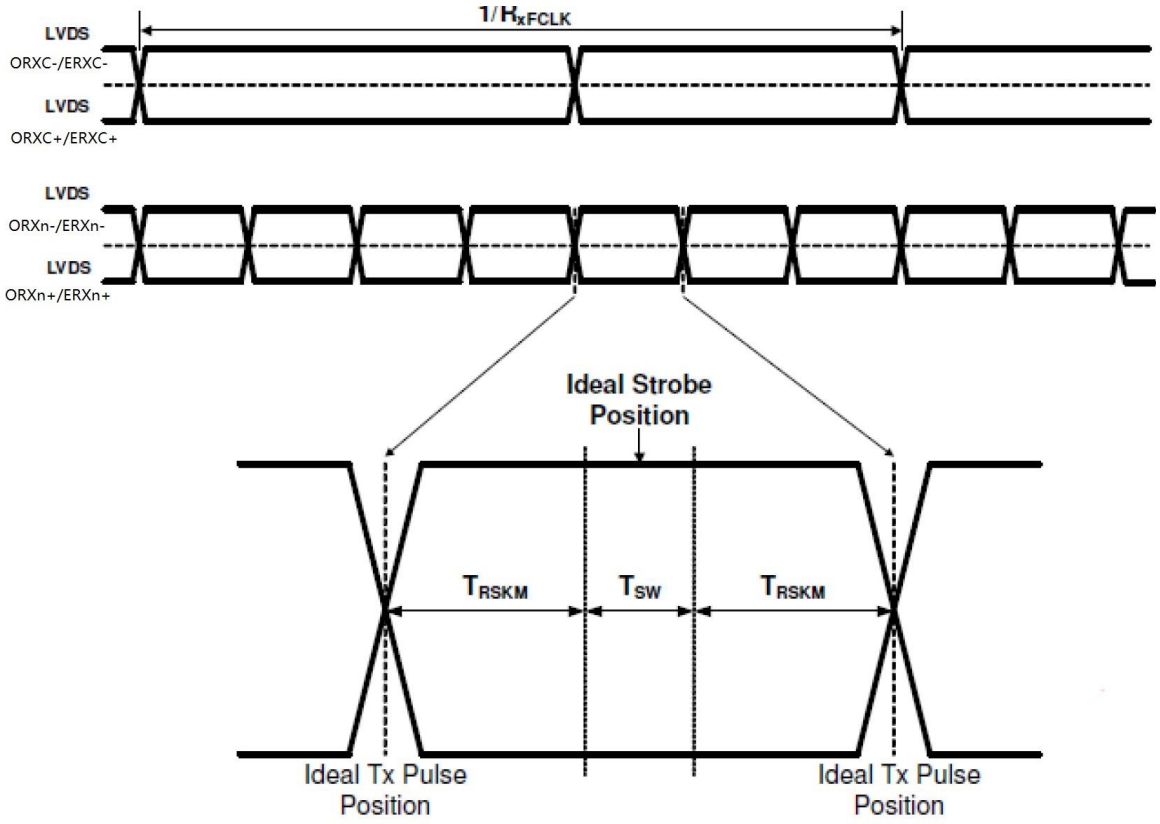

Note 1: TSW : Strobe width (LVDS IP internal data sampling window)

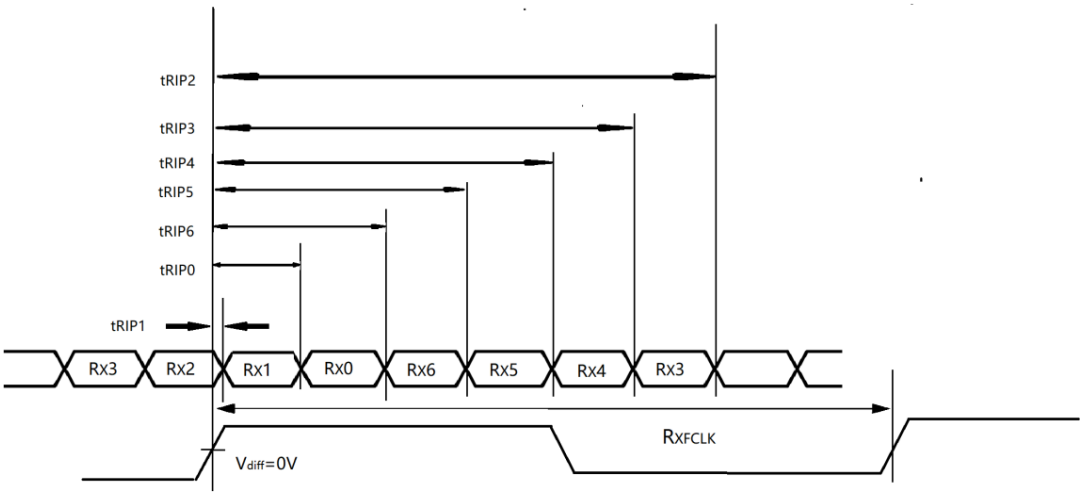

6.3 Timing Characteristics

Parameter	Symbol	MIN	Typ	MAX	Unit	Remark
CLK frequency	tclk	71.23	74.25	77.28	MHz	
Horizontal display area	thd		960		tclk	
Horizontal Blanking time	thbt	100	140	160	tclk	
HSYNC period	th	1060	1100	1200	tclk	
Vertical display area	tvd		1080		th	
Vertical Blanking time	tvbt	40	45	70	th	
VSD period	tv	1120	1125	1150	th	
Frame rate	FR		60		Hz	

6.4 Input Signal Timing Chart

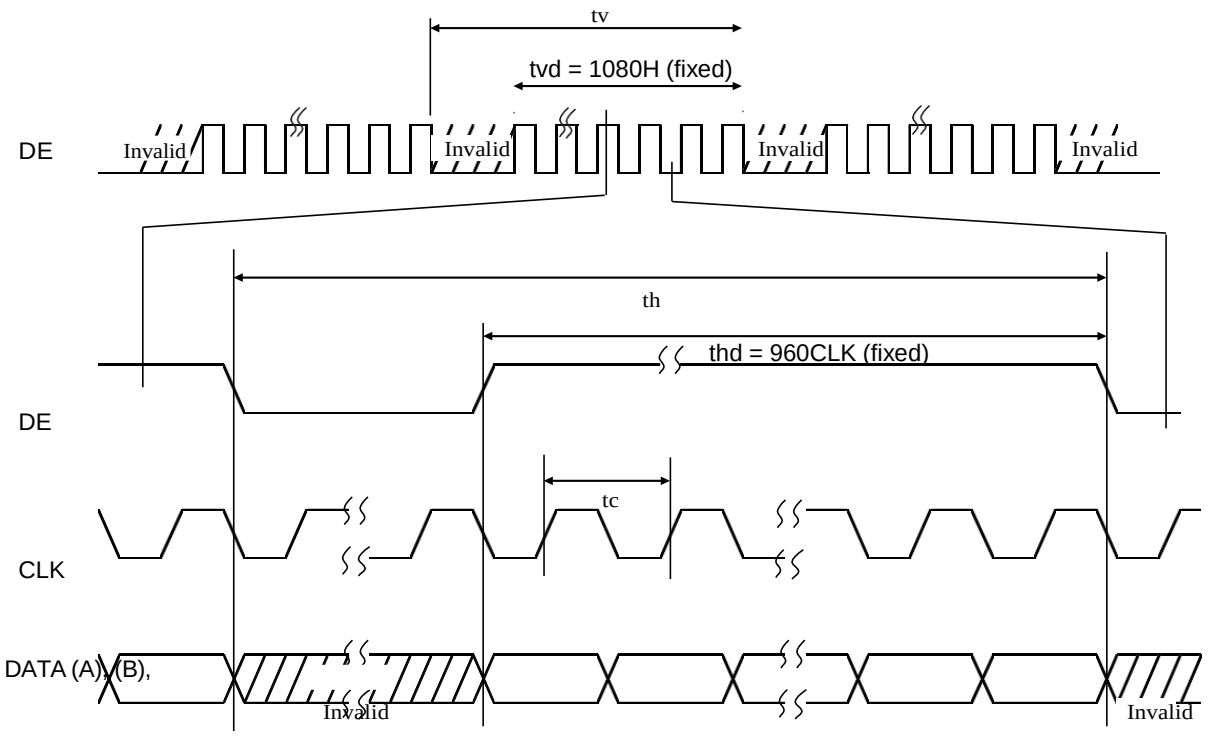

6.5 Input Data Mapping

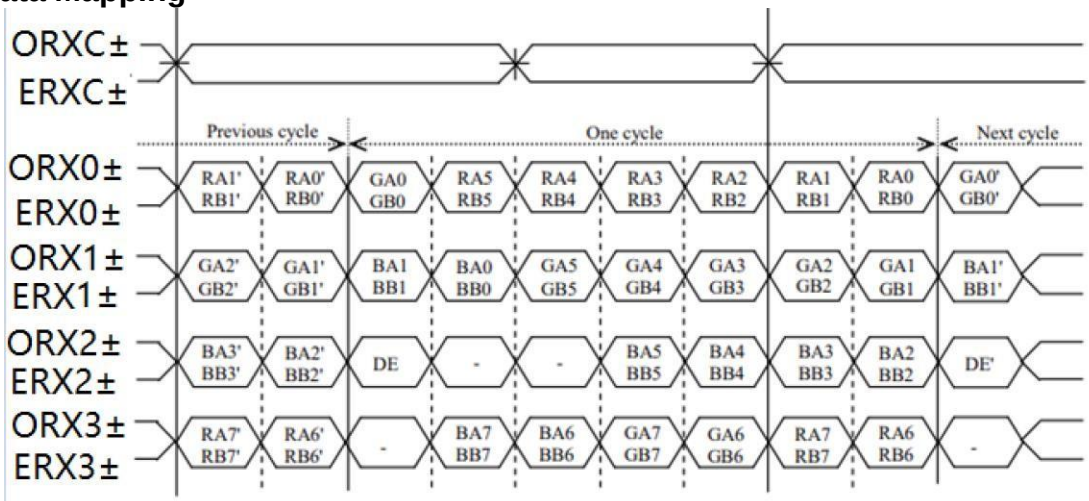

Note1: LSB (Least Significant Bit) – R0, G0, B0 MSB (Most Significant Bit) – R7, G7, B7
Note2: Twist pair wires with 100Ω (Characteristic impedance) should be used between LCD panel signal processing board and LVDS transmitter.

6.6 POWER on/off

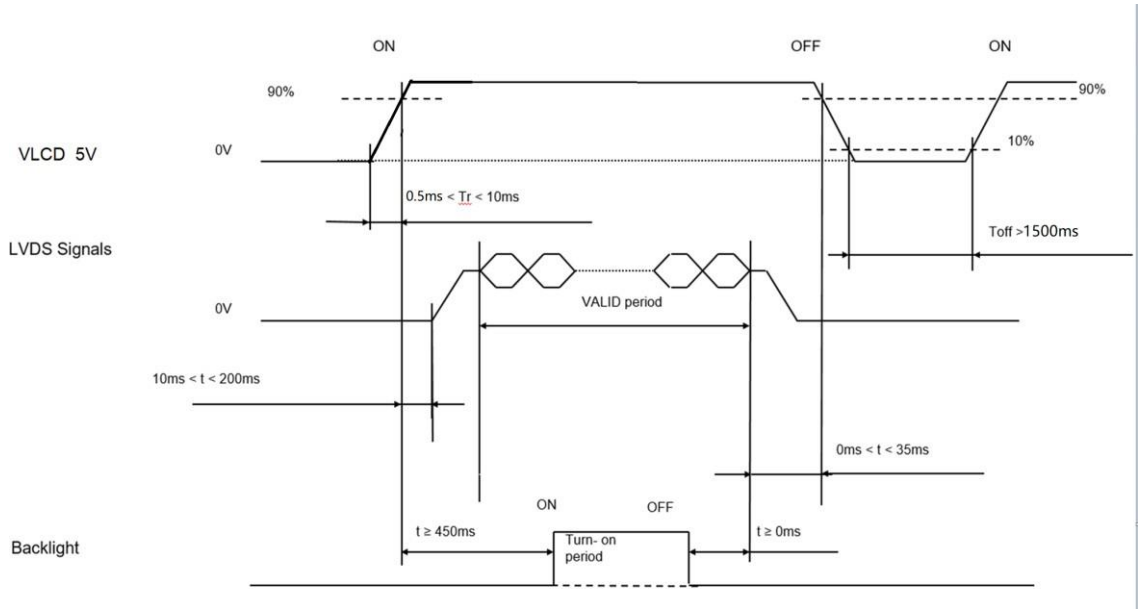

Note：Border means the area that 3.5mm inside the V.A .window.

7. Optical Characteristics

Item		Symbol	Condition	Min	Typ	Max	Unit	Remark
View Angles		θT	CR≧ 10	85	89	-	Degree	Note2,3
		θB		85	89	-		
		θL		85	89	-		
		θR		85	89	-		
Contrast Ratio		CR	θ=0°	1000	1500	-	-	Note 3
Response Time		T_{ON}	25℃	-	20	30	ms	Note 4
		T_{OFF}						
Chromaticity	**White**	x	Backlight is on	0.263	0.313	0.363	-	Note 1,5
		y		0.279	0.329	0.379		
	Red	x		0.616	0.666	0.716	-	Note 1,5
		y		0.264	0.314	0.364		
	Green	x		0.256	0.306	0.356	-	Note 1,5
		y		0.557	0.607	0.657		
	Blue	x		0.107	0.157	0.207	-	Note 1,5
		y		0.010	0.060	0.110		
Uniformity		U	-	75	80	-	%	Note 6
NTSC				67	72	-	%	Note 5
Luminance		L	-	300	350		cd/m^2	Note 7

Test Conditions:

1. I_F= 20 mA, and the ambient temperature is 25℃.
2. The test systems refer to Note 1 and Note 2.

Note 1: Definition of optical measurement system.

The optical characteristics should be measured in dark room.the optical properties are measured at the center point of the LCD screen. All input terminals LCD panel must be ground when measuring the center area of the panel.

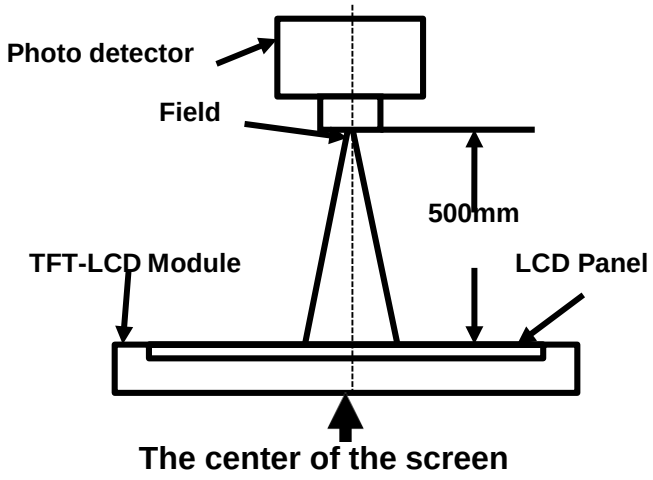

Note 2: Definition of viewing angle range and measurement system.

viewing angle is measured at the center point of the LCD by EZ-Contrast。

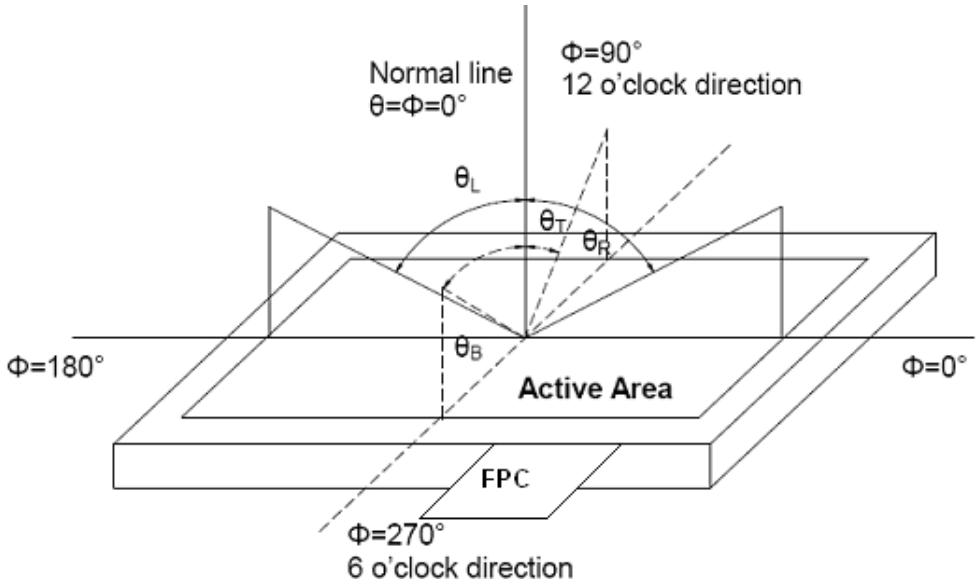

Note 3: Definition of contrast ratio

$$\text{Contrast ratio (CR)} = \frac{\text{Luminance measured when LCD is on the "White" state}}{\text{Luminance measured when LCD is on the "Black" state}}$$

“White state “: The state is that the LCD should drive by Vwhite.

“Black state”: The state is that the LCD should drive by Vblack.

Vwhite: To be determined Vblack: To be determined.

Note 4: Definition of Response time

The response time is defined as the LCD optical switching time interval between “White” state and “Black” state. Rise time (T_{ON}) is the time between photo detector output intensity changed from 90% to 10%. And fall time (T_{OFF}) is the time between photo detector output intensity changed from 10% to 90%.

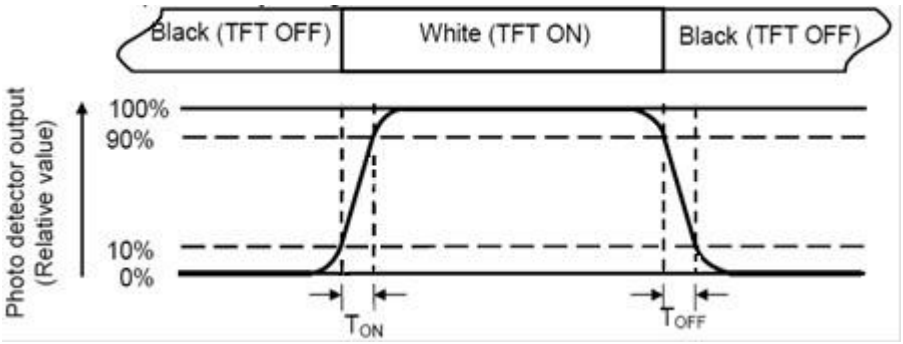

Note 5: Definition of color chromaticity (CIE1931) Color coordinates measured at center point of LCD.

Note 6: Definition of Luminance Uniformity

Active area is divided into 9 measuring areas (Refer Fig. 2). Every measuring point is placed at the center of each measuring area.

Luminance Uniformity (U) = Lmin/ Lmax

L-------Active area length W -----Active area width

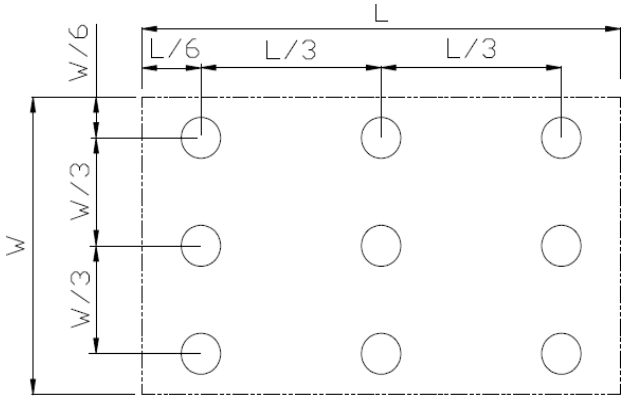

Lmax: The measured Maximum luminance of all measurement position.

Lmin: The measured Minimum luminance of all measurement position.

Note 7: Definition of Luminance:

Measure the luminance of white state at center point.

8. Mechanical drawing

CN1	
PIN NO.	SYMBOL
1	ORX0-
2	ORX0+
3	ORX1-
4	ORX1+
5	ORX2-
6	ORX2+
7	GND
8	ORXC-
9	ORXC+
10	ORX3-
11	ORX3+
12	ERX0-
13	ERX0+
14	GND
15	ERX1-
16	ERX1+
17	GND
18	ERX2-
19	ERX2+
20	ERXC-
21	ERXC+
22	ERX3-
23	ERX3+
24	GND
25	NC
26	NC
27	NC
28	VCC
29	VCC
30	VCC

REV	DC/EC NUMBER	DESCRIPTION	DATE

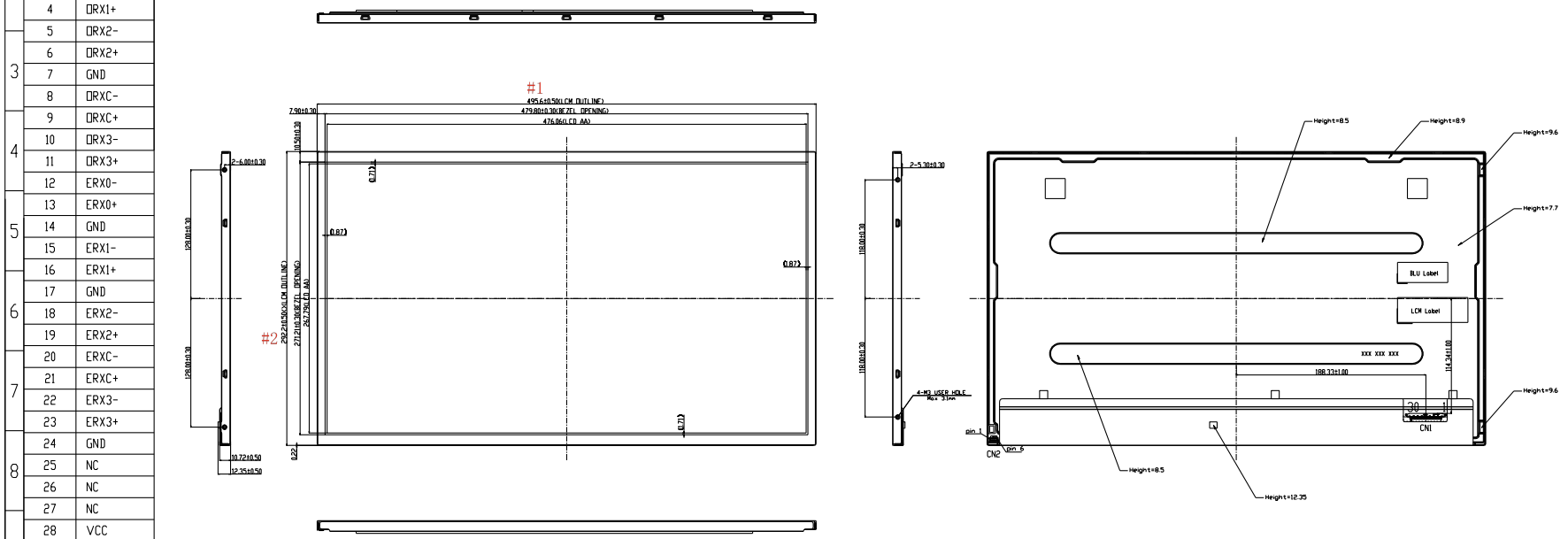

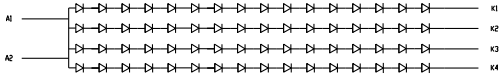

LED 64PCS
46.4~52.8V
60mA*4

CN2	
NO.	SIGNAL NAME
1	IRLED (CURRENT OUT)
2	IRLED (CURRENT OUT)
3	VLED (VOLTAGE IN)
4	VLED (VOLTAGE IN)
5	IRLED (CURRENT OUT)
6	IRLED (CURRENT OUT)

NOTES:
1.Display Type: a-Si SFT;
2.Viewing Direction: All;
3.Backlight: 64 LEDs
4.CN1 Connector type: MSBKT2407P30HB ;
CN2 Connector type: A1009AWRR-06-C1MB-R-H;
5.General Tolerance: ±0.5;
6.Requirements on environment protection: Q/S0002;
7.Recommended Case Open Area should be less than Module V.A.

3TFTLCD2110 (Z0559)

CONTROL DIMENSION			2D Rev.	00	TIANMA
REFERENCE DIMENSION	( )		3D Rev.	NA	
APPROVED	Du Wanchun	2025-06-24	PRODUCT NUMBER	C2150FHF1ME01	3rd ANGLE
CHECKED	Yao Lu	2025-06-24	PART NAME	YGT	UNIT mm
DESIGNED	Liao Zhixia	2025-06-24	DRAWING NUMBER	YGT1-00	SCALE 1:1
			MATERIAL NUMBER	C2150FHF1ME01	PAGE 1/1

9. Reliability Test

No	Test Item	Condition	Remarks
1	High Temperature Operation	+60℃，240H	IEC60068-2-1:2007 GB/T 2423.2-2008
2	Low Temperature Operation	0℃，240H	IEC60068-2-1:2007 GB/T 2423.1-2008
3	High Temperature Storage	+60℃，240H	IEC60068-2-1:2007 GB/T 2423.2-2008
4	Low Temperature Storage	-20℃，240H	IEC60068-2-1:2007 GB/T 2423.1-2008
5	Storage at High Temperature and Humidity(non-operation)	50℃，80%RH，300H	IEC60068-2-78 :2001 GB/T2423.3—2006
6	Thermal Shock (non-operation)	-20℃/30min，~60℃/30min，change time：5min，100cycle	Start with cold temperature, End with high temperature, IEC60068-2-14:1984 GB/T 2423.22-2012-Na
7	ESD	C=150pF，R=330Ω，9point/panel Air：±15kv，25times； Contact：±8kv，25times； （Environment：15℃~35℃，30%~60%，86Kpa~106Kpa）	IEC61000-4-2:2001 GB/T 17626.2-2018
8	Package Vibration	Frequency:5~20-200Hz, PSD:0.01-0.01-0.001 Total:0.781g2/Hz， Time：X/Y/Z each Axis 30min	

Table 9.1 Reliability test

Note1: Temperature is the ambient temperature of sample
Note2: Before cosmetic and function test, the product must have enough recovery time, at least 24 hours at roomtemperature.
Note3: In the standard condition, there shall be no practical problem that may affect the display function. After the reliability test, the product's function only be guaranteed, but not for all of the cosmetic specification.

10. Packing Instruction

NO	Item	Model (Material)	Quantity	Remark
1	C2150FHF1ME01	/	10	
2	Protect film	DFP	10	
3	PE bag	PE	10	
4	EPS box	EPS	1	
5	EPS cover	EPS	1	
6	Desiccant	/	4	

Table 10.1 Packing instruction

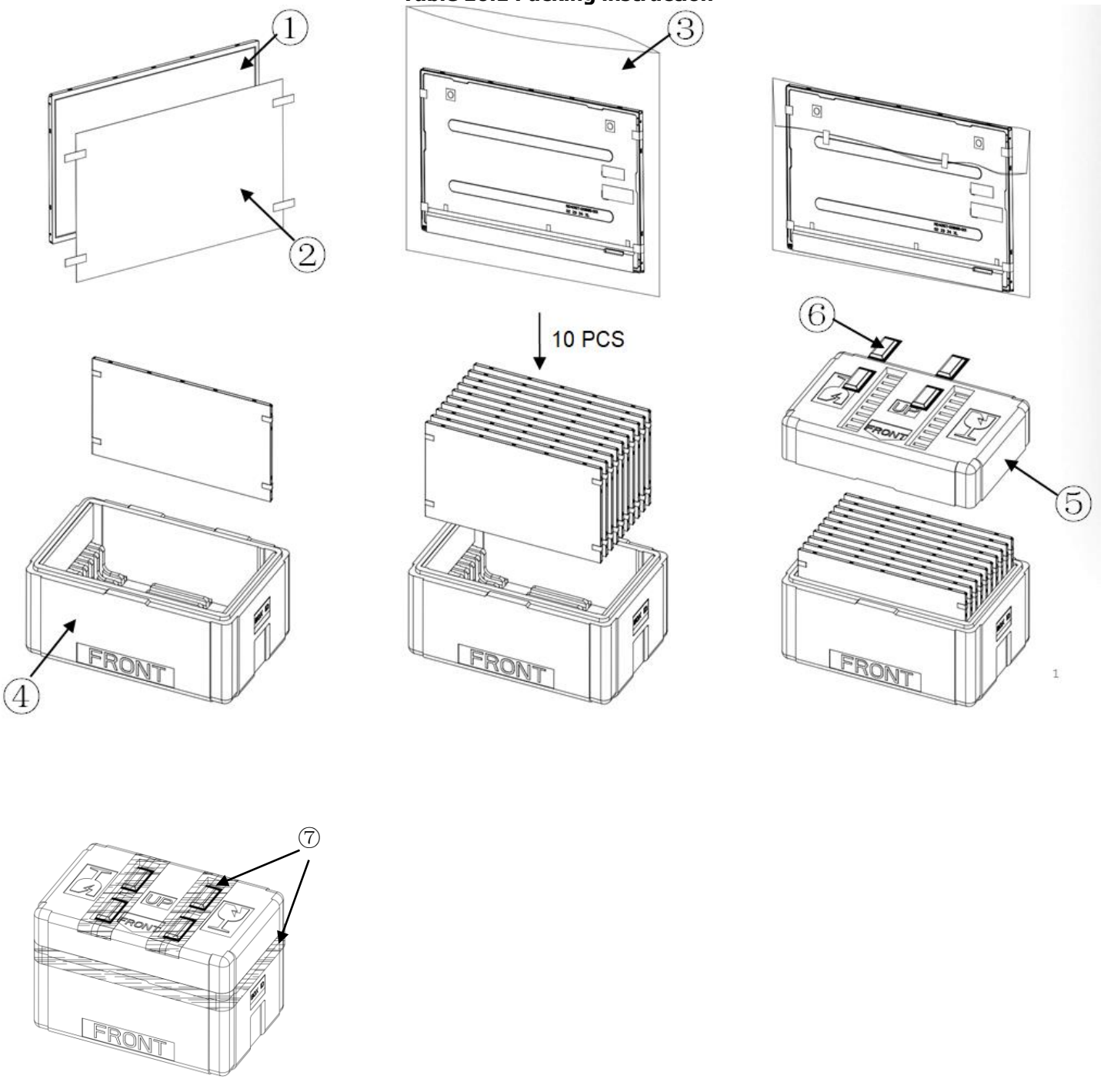

11. Precautions for Use of LCD Modules

11.1 Handling Precautions

(1) The display panel is made of glass. Do not subject it to mechanical shock by dropping it, etc.
(2) If the display panel is damaged and the liquid crystal fluid inside it leaks out be sure not to get any in your mouth. If the fluid comes into contact with your skin or clothes promptly wash it off using soap and water.
(3) Do not apply excessive force to the display surface or the bezel since this may cause the color tone to vary.
(4) The polarizer covering the display surface of the LCD module is soft and easily scratched. Handle the polarizer carefully.
(5) If the display surface is contaminated, breathe on the surface and gently wipe it with a soft dry cloth. If it is still not completely clear use a moist cloth with one of the following solvents:
   — Isopropyl alcohol
   — Ethyl alcohol

Solvents other than those mentioned above may damage the polarizer. Specifically, do not use the following:

   — Water
   — Ketone
   — Aromatic solvents

(6) Do not disassemble the LCD Module.
(7) If powered off, do not apply the input signals.
(8) To prevent destruction of the module by static electricity, be careful to maintain an optimum work environment.
(9) Be sure to ground your body when handling the LCD Modules.
(10) Tools used for assembly, must be properly grounded.
(11) To reduce the amount of static electricity generated, do not conduct assembly or other work under very low humidity conditions.
(12) The LCD Module is covered with a film to protect the display surface, remove film slowly under the ionizer.

11.2 Storage precautions

(1) When storing the LCD modules avoid exposure to direct sunlight or to the light of fluorescent lamps.
(2) The LCD modules should be stored within the rated storage temperature range. The recommend condition is: Temperature: 0 ~ 35 ℃ at normal humidity.
(3) The LCD modules should be stored in a room without acid, alkali or other harmful gas.

11.3 Transportation Precautions

The LCD modules should not be dropped or subject to violent mechanical shock during transportation. Also they should avoid excessive pressure, water, high humidity and direct sunlight.

11.4 Screen saver Precautions

Not display the fixed pattern for a long time. Use a screen saver, if the fixed pattern is displayed on the screen

11.5 Safety Precautions

(1) When you waste damaged or unnecessary LCDs, it is recommended to crush LCDs into pieces and wash t hem off with solvents such as acetone and ethanol, which should later be burned
(2) Be sure to turn off the power supply when inserting or disconnecting the LED backlight cable.
(3) LED driver should be designed carefully to limit or stop its function when over current is detected on the L ED.