**RoHS Compliant**

| Revision | Modify Record | Date |
|---|---|---|
| A/5 | 變更MINI DIN供應商 | 07/28/2026 |
| A/0 | 作 圖 | 03/28/2013 |
| A/1 | 修改P1,MINI DIN 9P插頭與P2,DB9P母頭改公頭 | 05/24/2013 |
| A/2 | 更改客戶料號為3KC00005210及補上插頭廠商與料號,線材印字 | 02/06/2015 |
| A/3 | 補上螺絲廠商名稱 | 06/29/2015 |
| A/4 | 更改MINI DIN 模型尺寸 | 07/26/2016 |

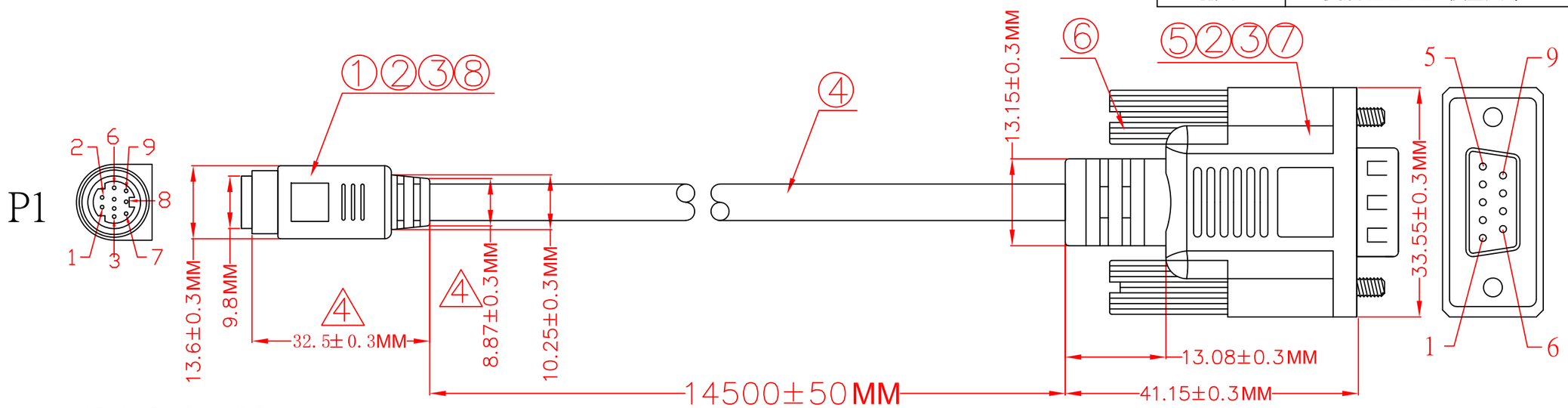


WIRING DIAGRAM

| P1 | P2 |
|---|---|
| 1 | 1 |
| 2 | 2 |
| 3 | 3 |
| 4 | 4 |
| 5 | 5 |
| 6 | 6 |
| 7 | 7 |
| 8 | 8 |
| 9 | 9 |
| SHELL | SHELL |

線材外被印字如下:(字高1.2MM,印白字)

E119932-U 卐 AWM 2464 80°C 300V 26AWG VW-1----------C 卐

AWM I/IIA 80°C 300V 26AWG FTI COPARTNER

MINI DIN 9PIN FEMALE模具編號:

內模:JAW-BOB-0197

外模:JAW-BOB-0198

| No. | Part No. | Q'ty | Units | Specification |
|---|---|---|---|---|
| 8 | 50-9015-0008 | 1 | PCS | PVC HEAT SHRINK TUBE BLCAK 1.5*8MM |
| 7 | 50-9015-0015 | 1 | PCS | PVC HEAT SHRINK TUBE ø1.5*15MM BLACK |
| 6 | 88-2401-02 | 2 | PCS | SCREW #4-40 37.5MM NICKEL PLATED(建信昌) |
| 5 | 3600-JP-0901 | 1 | PCS | DB9P MALE SOLDER TYPE 焊線前鎳後錫黑膠(涌泉 YQ-DB-09FBSiSS) |
| 4 | 25-0926-011458 | 1 | PCS | UL2464 26#+9C+AEB OD:6.0MM(96B) BLACK L:14580MM |
| 3 | 89-1001-0050 | 40 | g | OUTER MOLDED PVC 50% BLACK |
| 2 | 89-0000-0000 | 16 | g | INNER MOLDED P.E |
| 1 | 68-2202-0901 | 1 | PCS | MINI DIN 9PIN FEMALE MOLD(轄素 GT-MD-030) |


JAWSSTECH 兆鈺科技有限公司
JAWSSTECH TECHNOLOGIES LIMITED
地址:臺灣 新北市汐止區大同路二段171號3樓之3
TEL:886-02-86926686 FAX:886-02-86926343 Web:www.jawscable.com


Quality Symbols: ■ RoHS Compliant ☐ UL Approved


This drawing may not be copied or reproduced in any way,and may not be passed on to a third party without written permission.
Part-ownership and part-copyright of JAWS


| | | | |
|---|---|---|---|
| Description | MINI 9P/F TO DB 9P/M CABLE | | |
| Customer Name | YU WEI | Drawing No. | 20130314 |
| Customer No. | 3KC00005210 | Designed By | ZHANGYANGWU |
| Produce No. | 13-210-E008 | Approved By | |
| Date | 03/24/2013 | Scale | Not to scale |

Third Angle Projection

Units: ■ MM ☐ Inch

Size: A4

**RoHS Compliant**

| Revision | Modify Record | Date |
|---|---|---|
| A/5 | 變更MINI DIN供應商 | 07/28/2026 |

| Revision | Modify Record | Date |
|---|---|---|
| A/0 | 作 圖 | 01/10/2014 |
| A/1 | 修改P1,MINI DIN 9P插頭與P2,DB9P母頭改公頭 | 05/24/2013 |
| A/2 | 更改客戶料號為3KC00005210及補上插頭廠商與料號,線材印字 | 02/06/2015 |
| A/3 | 補上螺絲廠商名稱 | 06/29/2015 |
| A/4 | 更改MINI DIN 模型尺寸 | 07/26/2016 |

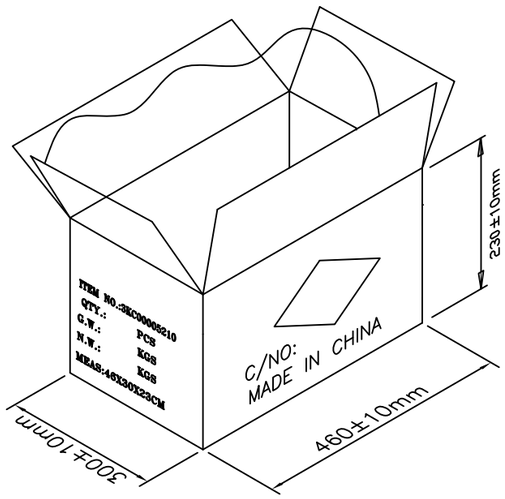


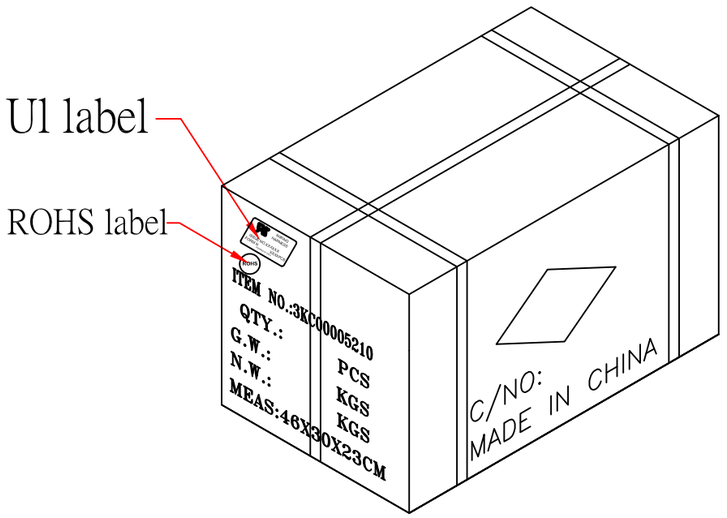
figure_Ul label
ROHS label
ITEM NO.:3KC00005210
QTY.: PCS
G.W.: KGS
N.W.: KGS
MEAS:46X30X23CM
C/NO:
MADE IN CHINA

繞線方式:

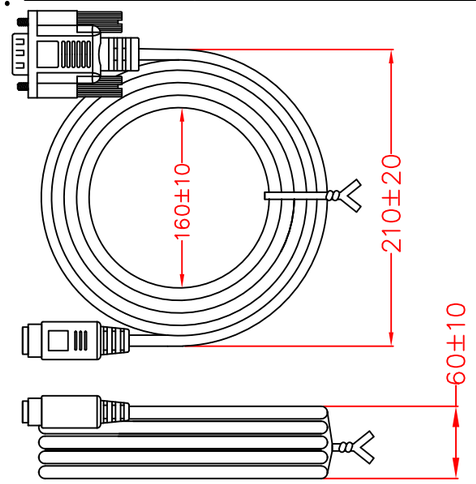


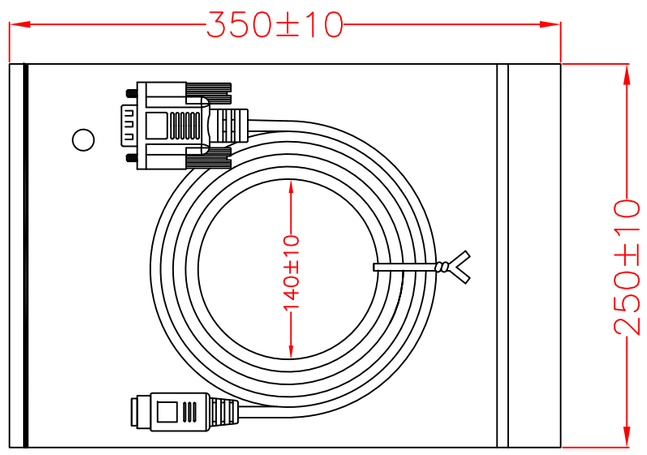


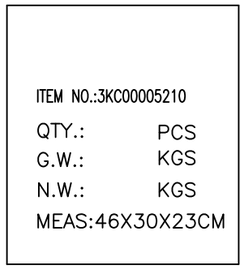


Side

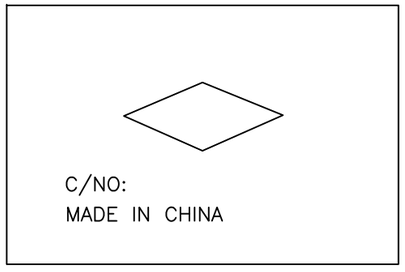


Front




Ul label

ROHS label

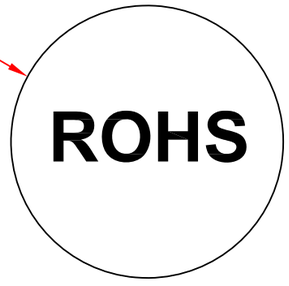


## PE bag printing contect:

04 Recyclable

PLASTIC BAGS CAN BE DANGEROUS
TO AVOID DANGER OF SUFFOCATION
KEEP THIS WRAPPER AWAY FROM
BABIES AND CHILDREN

| No. | Part No. | Q'ty | Units | Specification |
|---|---|---|---|---|
| 4 | 95-001-00035 | | PCS | ∮35mm ROHS label |
| 3 | 99-030004428 | | PCS | PASTEBOARD: 440(L)*280(W)MM(A=A) |
| 2 | 98-040072535 | 1 | PCS | PE BAG:350(L)*250(W)*0.07(T)MM |
| 1 | 99-010463023 | | PCS | CARTON: 460(L)*300(W)*230(H)mm |


JAWSSTECH 兆鈺科技有限公司
JAWSSTECH TECHNOLOGIES LIMITED
地址:臺灣 新北市汐止區大同路二段171號3樓之3
TEL:886-02-86926686 FAX:886-02-86926343 Web:www.jawscable.com


Quality Symbols: ■ RoHS Compliant ☐ UL Approved


This drawing may not be copied or reproduced in any way,and may not be passed on to a third party without written permission.
Part-ownership and part-copyright of JAWS


| | | | |
|---|---|---|---|
| Description | MINI 9P/F TO DB 9P/M CABLE | | |
| Customer Name | Yu Eei | Drawing No. | 20130314 |
| Customer No. | 3KC00005210 | Designed By | Zou Meiling |
| Produce No. | 13-210-E008 | Approved By | |
| Date | 03/24/2013 | Scale | Not to scale |

Third Angle Projection

Units ■ MM ☐ Inch Size A4