新航新型包装材料（蘇州）有限公司
地址：苏州市吴中区兴吴路19 号
電話：0512-65361168（代表線）
傳真：0512-65363540

樣 品 確 認 書

客 戶： DIVA

品 名： EPE BOTTOM (RIGHT) (RUG5513AMI)

料 號： 3MD664PK080 (M3492)

規 格： EPE

日 期： 2026 年 09 月 30 日

設計驗證工程課
2026 -10- 12
發行

業務經辦	品　管
邵云凤	邱 李 财



Rev.	Date	Update Description	Signed	Remark	Approve

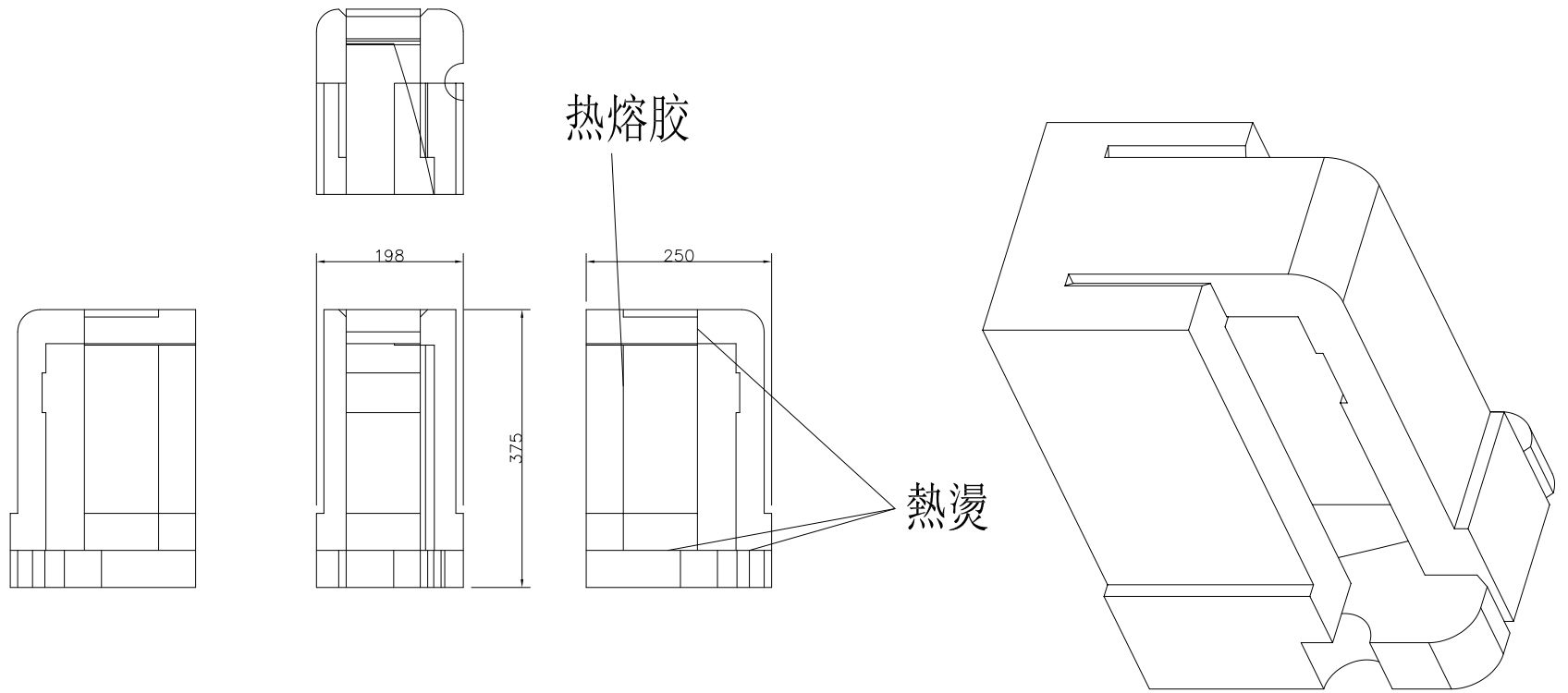

产品颜色：白色
产品密度：25KG/M*3
尺寸公差：+/−5mm
印章颜色：黑色
贴合方式：热烫 + 热熔胶

設計驗證工程課
2026 -10- 12
發行

NOTE:

SING HOME POLYFOAM CO., LTD

ITEMS		SPEC. VALUE	REMARK
Dimension L x W x H (mm)		250*198*375	
Material	Weight	185±10% g	
	Color	White	
	Material	EPE	
	Density	25kg/m3	
	Tolerance	±5	

Projection

Customer	DIVA
Part No.	4G.64610.001 (3MD664PK080) (M3492)
Project No.	CUSHION EPE-BOT-R RUG5513AMI

Date	20241101	Designer	Jack
Scale	1:1	Checked	
Unit	mm		

Qisda

Dimension Approval Sheet

Part No.：4G.64610.001	Material：EPE
Desc.：CUSHION EPE-BOT-R RUG5513AMI	Color (or P-rocess): 白色
Model Name：RUG5513AMI	Date：2024-11-8
Vender：	Drawing Rev.： A

Inspection Gauge：

Caliper ..... (C)	Thickness Gauge ..... (T)	Gauge Block ..... (B)	
Micrometer ..... (M)	Height Gauge ..... (H)	Go. No-Go ..... (G)	
Opt. Comparator ..... (O)	Dial Indicator ..... (D)	Microscope ..... (S)	
Pin Gauge ..... (P)	Flexible Rule ..... (F)	Measuring Tape -------- (E)	

Distribution

R&D	V
QC	V
Purchase	
Vender	V

Item	Check Code	Part Portion	Specification	+Tol	-Tol	Cav. No.	Part Reading/Condition				Judge OK/NG	Remark
							Sample 1	Sample 2	Sample 3	**RD check sample**		
1	E4	250	+5/-5	255	245		250	251	250	250	OK	
2	E5	375	+5/-5	380	370		374	375	375	375	OK	
3	D4	198	+5/-5	203	193		197	198	198	198	OK	
4			+3/-3								OK	
5			+3/-3								OK	
6			+3/-3								OK	
7			+3/-3								OK	
8			+3/-3								OK	
9			+3/-3								OK	
10			+3/-3								OK	
11			+3/-3								OK	
12			+3/-3								OK	
13			+3/-3								OK	
14			+3/-3								OK	
15			+3/-3								OK	
16			+3/-3								OK	
17			+3/-3								OK	

Initiator: 徐林娜 Review By: 慈玲玉 **Approved By:** DIVA/Ferris Tsai 11/13 2024

AP_GP BOM Report

Qisda P/N	4G.64610.001
Qisda Item description	CUSHION EPE-BOT-R RUG5513AMI
Maker	SING HOME
Maker P/N	4G.64610.001
Create date	2024/11/15

Component type	Description	Supplier	Subpart type	Subpart Description	Subpart Supplier	Sample Description	Remark	Report No.	Test Date	Cd	Pb	Hg	Cr6+	PBBs/PBDEs	Br	Cl	Br+Cl	DIBP	DEHP	BBP	DBP	F	I	Exemptions
Cushion	EPE珍珠棉	SINGHOME	Cushion	EPE	SINGHOME	白色珍珠棉		A2180029045101003E	2018/03/20	N.D	N.D	N.D	N.D	N.D	N.D	N.D	N.D	N.D	N.D	N.D	N.D	N.D	N.D	
Cushion	熱熔膠 PELLET:T-HM7220	南寶樹脂	Adhesive used in Packing material	熱熔膠 PELLETS:T-HM7220	南寶樹脂	熱熔膠 PELLETS:T-HM7220		EKR22201179	2022/02/24	N.D	N.D	N.D	N.D	N.D	N.D	N.D	N.D	N.D	N.D	N.D	N.D	N.D	N.D	
Ink/Paint/Pigment	春光501 黑色油墨	新航	Ink/Paint used in Packing material	春光501黑色油墨	新航	春光501黑色油墨	春光為原料供應商,新航為送測商	A2180029045101006E	2018/03/20	N.D	N.D	N.D	N.D	N.D	N.D	N.D	N.D	N.D	N.D	N.D	N.D	N.D	N.D	
Summary data										N.D	N.D	N.D	N.D	N.D	N.D	N.D	N.D	N.D	N.D	N.D	N.D	N.D	N.D	