APPROVAL SHEET

CUSTOMER	安勤
CUSTOMER P/N	**A C C - A D P - 1 8 0 M - 0 1 R**
DESCRIPTION	**24V/7.5A**
EDAC MPN	**EM11801K(M03)**
EDAC MODEL NO FOR SAFETY	**EM11801K**
DATE	**2025-12-03**
REVISION	**0**

APPROVED	DESIGN	PREPARE	
陳瑰琦	李世旭	李世旭	**RoHS**
CONCLUSION **判定結果**	**APPROVED** **承認**	**CONDITON APP'D** **有條件承認**	**CUSTOMER'S SIGNATURE:** **客戶簽章:**

EDACPOWER

翌勝電子股份有限公司

EDAC POWER ELECTRONICS CO., LTD.

新北市中和區建一路 150 號 11 樓之 2(E 棟)

TEL:886-2-82263289 FAX:886-2-82263327

翌勝電子(蘇州)有限公司

Edac Power Electronics (Suzhou) Co., Ltd.

江蘇省蘇州工業園區勝浦鎮常勝路 59 號

No.59, Chang Sheng Road, Sheng Pu,
Suzhou Industrial Park, Jiangsu, China

Tel: 512-6282-1628 Fax: 512-6282-9608

東莞市翌勝電子有限公司

廣東省東莞市鳳崗鎮鳳崗科技路6號3樓901室

Tel: 0769-38859898 Fax: 0769-38859897

Index

1-0 General Description

2-0. Input Requirements Specification

3-0. Output Requirements Specification

4-0. Reliability Specification

5-0. Environment Specification

6-0. Safety Specification

7-0. Mechanical Specification

1-0. General Description

The purpose of the document is to specify a **Single phase AC input**, **single output** switching power supply. This specification is suitable for: EM11801K

This product is AC to DC switching power transfer device, it can provide for a 24Vdc, 7.5A max., 180W Max. DC output with constant voltage source.

This Specification defines the input, output, performance characteristics, environment, noise and safety requirement for a power supply.

2-0.Input Requirements

2-1. AC Input Voltage

Maximum Voltage：264Vac

Normal Voltage：100~240Vac

Minimum Voltage：90Vac

2-2. AC Input Frequency

Maximum Frequency：63Hz

Normal Frequency：50~60Hz

Minimum Frequency：47Hz

2-3. Input Current:

2.5-0.8A (Max.) @ 100Vac/60Hz-240Vac/50Hz will Max. load.

2-4. Efficiency:

Designed to meet the following standard：

2-4-1.Efficiency：

≧ 89% (Avg.) at 115Vac/60Hz & 230Vac/50Hz input voltage and 25%、50%、75% & 100% of Max. output current.

≧79% at 115Vac/60Hz & 230Vac/50Hz input ≧ voltage and 10% of Max. output current.

2-4-2.No Load Power Consumption：No Load Watt＜0.15W at normal line input.

2-5. Configuration

3-wire AC input (**Line ,Neutral,FG**)

2-6. Input Fuse

The hot line side of the input shall have a fuse, rating (**T3.15A/250V**)

2-7. Inrush Current:

≦ **60A** at 110Vac At cold start, Max. load.

≦ 120**A** at 230Vac At cold start, Max. load.

2-8. Line Regulation:

This line regulation is less than **± 1%,** 100Vac/60Hz-240Vac/50Hz, with Max. load.

2-9. Hold Up Time:

≧ **10mSec.** @ 100Vac/60Hz-240Vac/50Hz, with Max. load.

2-10. Rise Time:

≦**100mSec**. @ 100Vac/60Hz-240Vac/50Hz, with Max. load.

From 10% to 90% of output voltage.

2-11. Turn-ON Time:

The output voltage should rise to 90% of rated output voltage.

in less than 3 SEC. 100Vac/60Hz-240Vac/50Hz, with Max. load.

2-12. Harmonic Standard and Power Factor

The adaptor complied with IEC61000-3-2 Class D harmonic standard while input power over than 75W. The PF shall > 0.95 @ 100Vac input and > 0.9 @ 240Vac input with Max. load.

3-0. Output Requirements

3-1. Output Voltage and Current

Output Voltage (Vdc)	Currnet Min. (A)	Current Max. (A)
+24V	0A	7.5A

3-2. Combine Regulation

Output Voltage (Vdc)	Tolerance (%)	Regulation (V)
＋24V	+5%~-5%	22.8V ~ 25.2V

3-3. Dynamic Load Regulation

±5% excursion for 50% - 100% or 100% - 50% load change of DC output at any frequency up to 1KHz(duty 50%)

3-4. Ripple & Noise

The power supply shall not exceed the following limits on the indicated voltage for 60Hz or 50Hz ripple,

Switching frequency ripple and noise and dynamic load variations measured with a 20MHz bandwidth.

Output	Ripple/Noise
+24V	360mV max. of full load & 50% load current

Ripple／Noise：60Hz ripple + switching ripple and noise.
Ripple & Noise are measured at the end of output cable which are added a 0.1uF ceramic capacitor and a 47uF electrolytic capacitor.

3-5. Over Voltage Protection

150% Max. of the rated output voltage.
The adaptor shall have OVP with auto-recovery mode when output voltage reaches the trigger point of OVP.

3-6. Short-Circuit Protection

The adapter can withstand continuous short at DC output and no damage. It will enter into Normal condition if the fault condition is removed. The short circuit impedance should be less than 0.3R.

3-7. Over Current Protection

110 ~ 150% of rated output current.
The adapter can withstand continuous short at DC output and no damage.
It will enter into normal condition if the fault condition is removed.

3-8. Stability

2% Max. at constant load with constant input (after 30 minutes of operation).

3-9. Drop-out (Power Line Disturbance)

Output voltage shall remain within the specified regulation range, through the absence of a line input during 1/2 cycle, at full load and normal AC line input.

3-10. Voltage Isolation

The DC ground will be isolated from the AC neutral and AC line.

4-0.Reliability.

4-1. MTBF: (MIL-HDBK-217F)

The power supply shall be designed and produced to have a mean time between failure (MTBF) of 100,000 hours at 25℃.

5-0. Environment.

5-1 Temperature :

a. Operating : -20 to 40 ℃

b. Storage : -20 to 85 ℃

5-2 Humidity :

a. Operating : 10 to 90 %

b. Storage: 5 to 90 %

5-3 Altitude :

From sea level to 5,000 Meter (operation) and 5,000 Meters (non operation)

6-0. Safety

6-1. Hi-Pot Test

P->S: 4200Vac 1Sec 10mA;

L,N--->FG: 1800Vac 2Sec 10mA

6-2. Insulation Test

500Vdc 3sec. between primary and secondary circuit.

IR should ≧ 50MΩ

6-3. Leakage Current

≦ 500uA, at 240Vac/50Hz.

6-4.Touch Current

≦ 100uA, at 240Vac/50Hz

6-5. Safety

UL, CUL, TUV, CB, UKCA, CE, FCC

6-6. EMS

Items	Specification	Reference
ESD	Contact：±8KV	IEC61000-4-2
	Air：±15KV	
RS	Frequency：80 ~ 2700MHz Field Strength 10V/M，80% AM(1KHz)	IEC61000-4-3
EFT	2.0KV on input AC power ports.	IEC61000-4-4
SURGE	Line to Line：±1KV (peak) Line to FG：±2KV (peak)	IEC61000-4-5
CS	RS Frequency：0.15 ~ 30MHz Field Strength 3V/M，80% AM(1KHz)	IEC61000-4-6

	RS Frequency：ISM Bands Field Strength 6V/M，80% AM(1KHz)	
PFMF	30A/m	IEC61000-4-8

6-7. EMI

Comply with Standards
EN55011 Class B FCC PART 15 Class B

7-0. Mechanical Characteristics.

7-1. Physical Size: 151.3mm (L) * 75.8mm (W) * 25.4mm (H)

7-2. Enclosure material: 94V-0 minimum.

7-3. Output Cable (Reference)：See Outline Drawing

7-4. Vibration Test

The vibration frequencies are set at 20Hz, with total amplitude of 1.5mm along the 3 directions namely X-Y-Z. The each direction should be vibrated for 60 minutes, after testing no abnormal electrical or mechanical should occur.

7-5. Drop Test (Referencing to CSA C22.2 No.950/UL1950/UL1310/EN62368/EN60601)

Products shall be dropped from a height of 1000 mm onto a horizontal surface consists of hardwood at 13mm thick, mounted on two layers of plywood each 19mm to 20mm thick, all supported on a concrete or equivalent non-resilient floor. Upon conclusion of test , the equipment don't need be operational , but need meet Hi-Pot specification requirement .

7-6. Net Weight (Reference)：480+/-10g

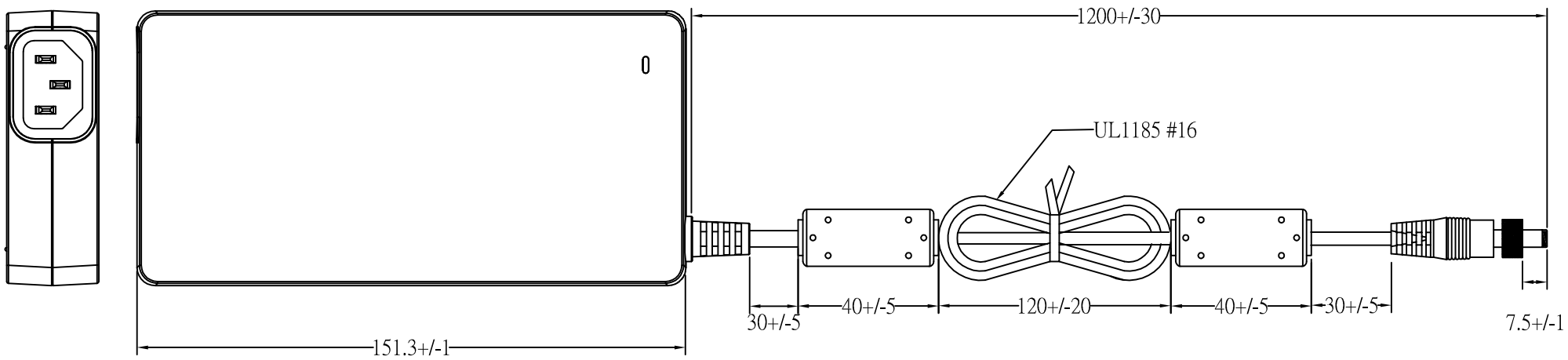

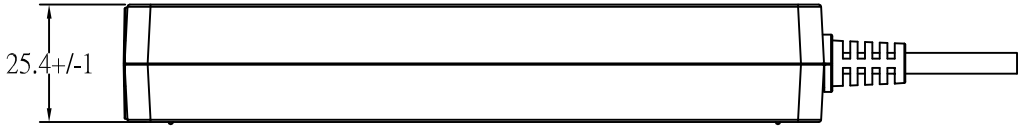

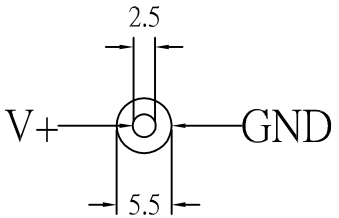

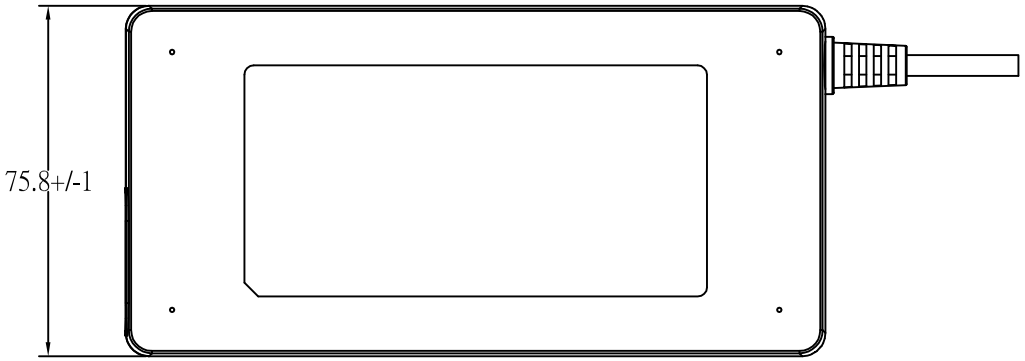

EDAC POWER ELEC.				APPROVED
MODEL	EM11801K(M03)	UNIT	mm	DESIGNED
color	BLACK	SCALE		CHECK
cus.		DATE	2024-11-24	DRAWING L.J.YU

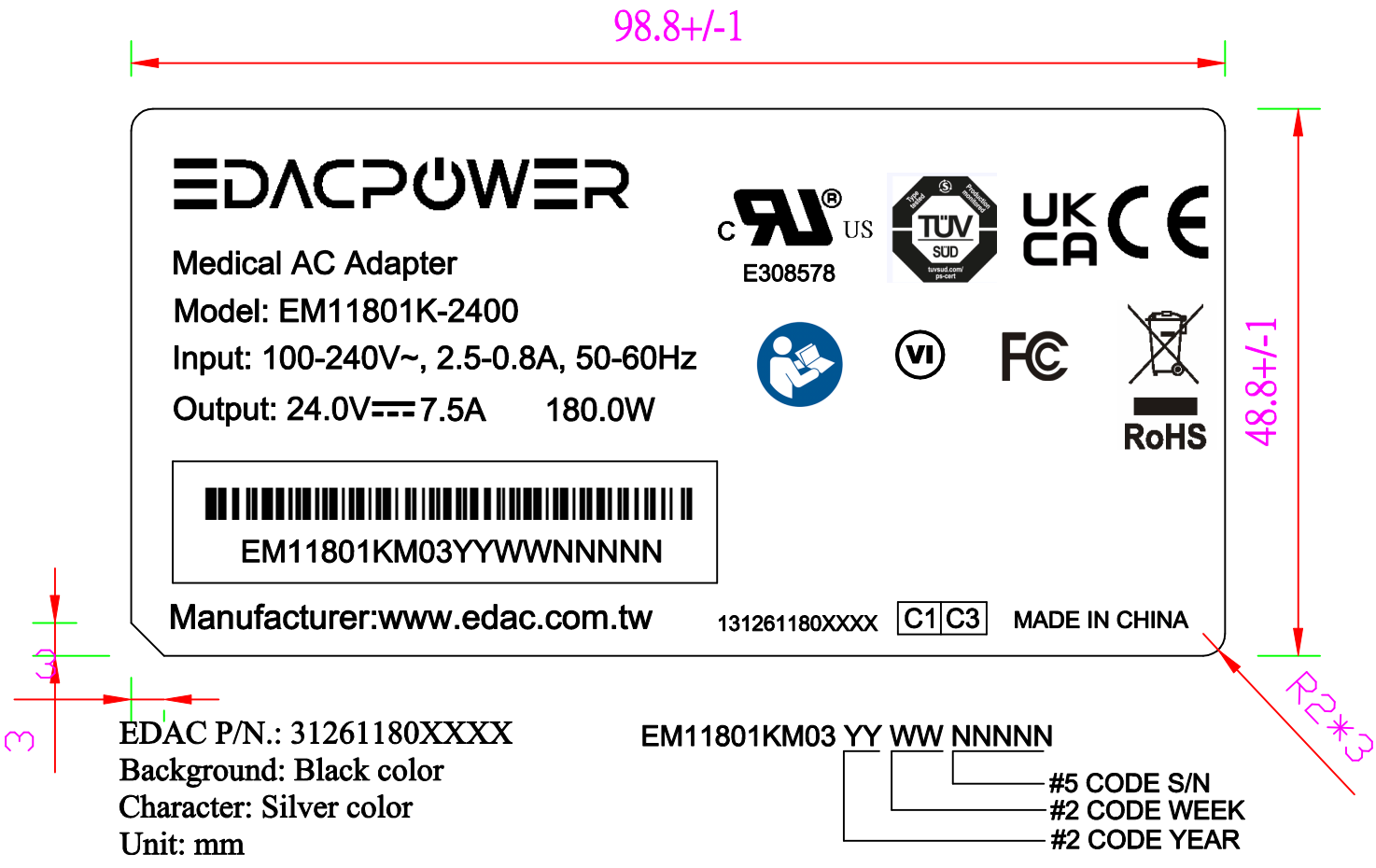

EDAC P/N.: 31261180XXXX
Background: Black color
Character: Silver color
Unit: mm

EM11801KM03 YY WW NNNNN
#5 CODE S/N
#2 CODE WEEK
#2 CODE YEAR