安勤科技股份有限公司

APPROVAL SHEET
NO.APP-241324

QD4-015 Rev.B5

申請種類: 正式承認

料號	E1961121650008R
品名	CPU cooler 4P/12V/側吹FAN 20CM CU 65W 鑫旭A1 BMX-T820 89.3*89*27.5 5500RPM 58.1dBA

製造商	鑫旭
製造商型號	E1961121650008R

Update 原因說明	
庫存說明	
其它	

安勤科技股份有限公司 正式承認 07/12/2024 資料中心 AVALUE TECHNOLOGY INC.

安勤科技 測試報告

測試日期	2024-07-11 10:30:38	測試樣品數	3 PCS

	項目	測試條件	結果
測試項目	外觀	核對實物與照片是否相符，檢查背面是否背膠	Pass
	材質	依照承認圖面所標示的材質為檢驗標準	Pass
	電氣特性		
	機械強度		
	實裝動作	與料件組裝檢驗	Pass
	破壞實驗		
	顏色	依照照片或圖面標示的顏色為檢驗標準	Pass
	尺寸	依照承認圖面所標示的尺寸為檢驗標準	Pass
	沾錫性		
	壽命實驗		
	安規		
	其它測試		
	使用儀器	游標卡尺	
備註			
測試結果	符合測試條件及規格		

備註:
1. 申請人需先至GPM/管理/物料MCD設定/料號-審核狀態為通過，查詢此料已完成GREEN的承認，再辦理規格等承認。

2. 本單不能代替採購單及其它用途。
3. 如涉及專利及法律之問題,應由送樣廠商負全責。
4. 以下內容所註記,已經檢驗過並給予承認。
5. 申請承認需依料階符合「承認應備文件和檔案」

Workflow

Workflow Status	Action	Signoff User	Local Client Time	Signoff Comments
Initial (填表人)		ME1 Jamie Liao (廖淑芬)	2024-07-11 10:33:20	
Manager	Approved	ME1 Frank Lu (呂泰儀)	2024-07-11 10:38:17	
QA	Approved	QA-QA Amber Kuo (郭歆婕)	2024-07-11 11:40:17	
QC	Approved	QA-QC Jeason_Shen (沈俊輝)	2024-07-11 12:08:38	
PDC	Approved	PDC Narnia Chen (陳怡如)	2024-07-12 16:29:16	


AIR FLOW

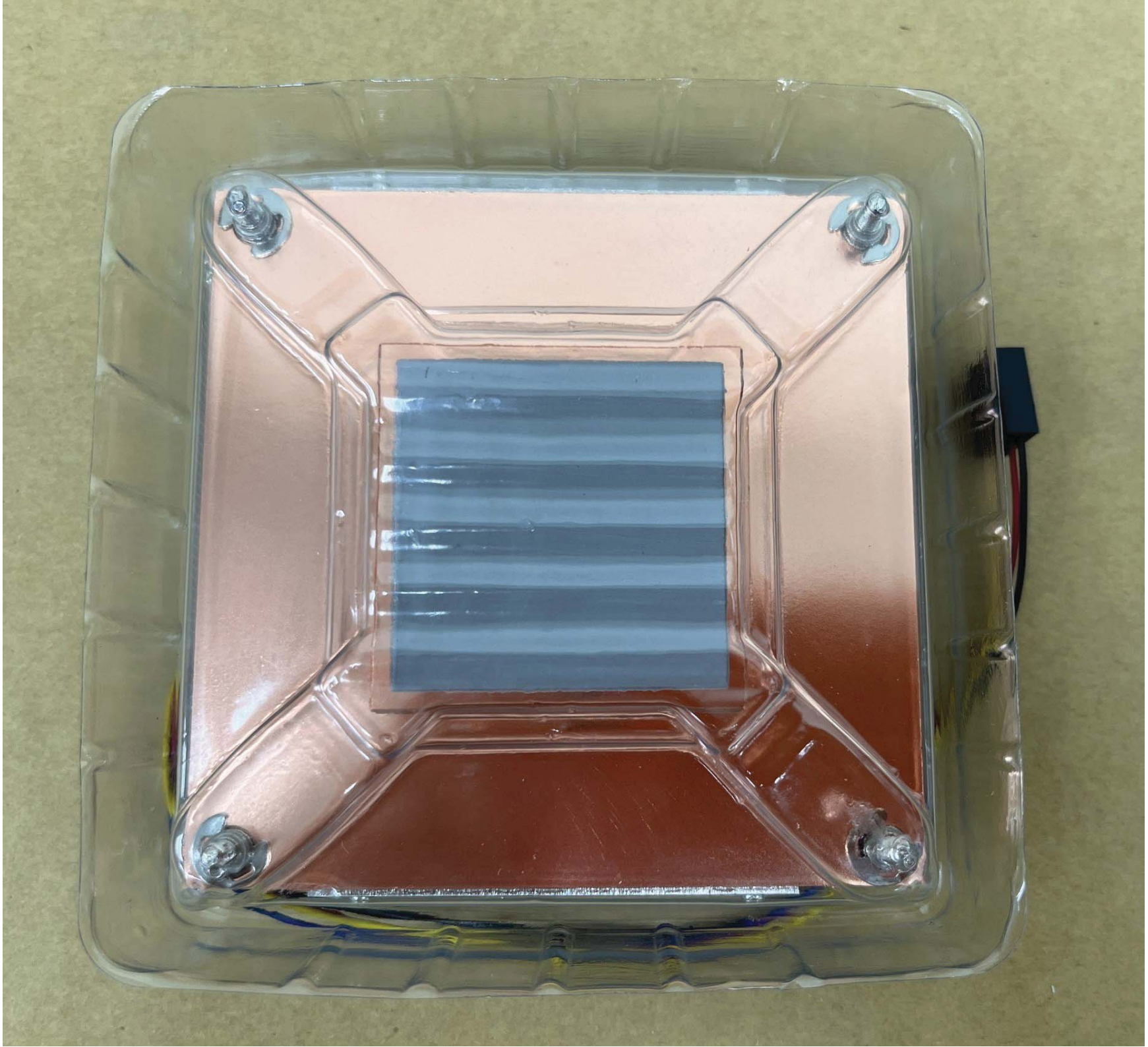


SUNTAI
made by Becool
MADE IN CHINA
MAKER NO:8015BVM-M13
PART NO:BD208015MBPA03
DC 12V Amp:1.0A
DATE: 4326

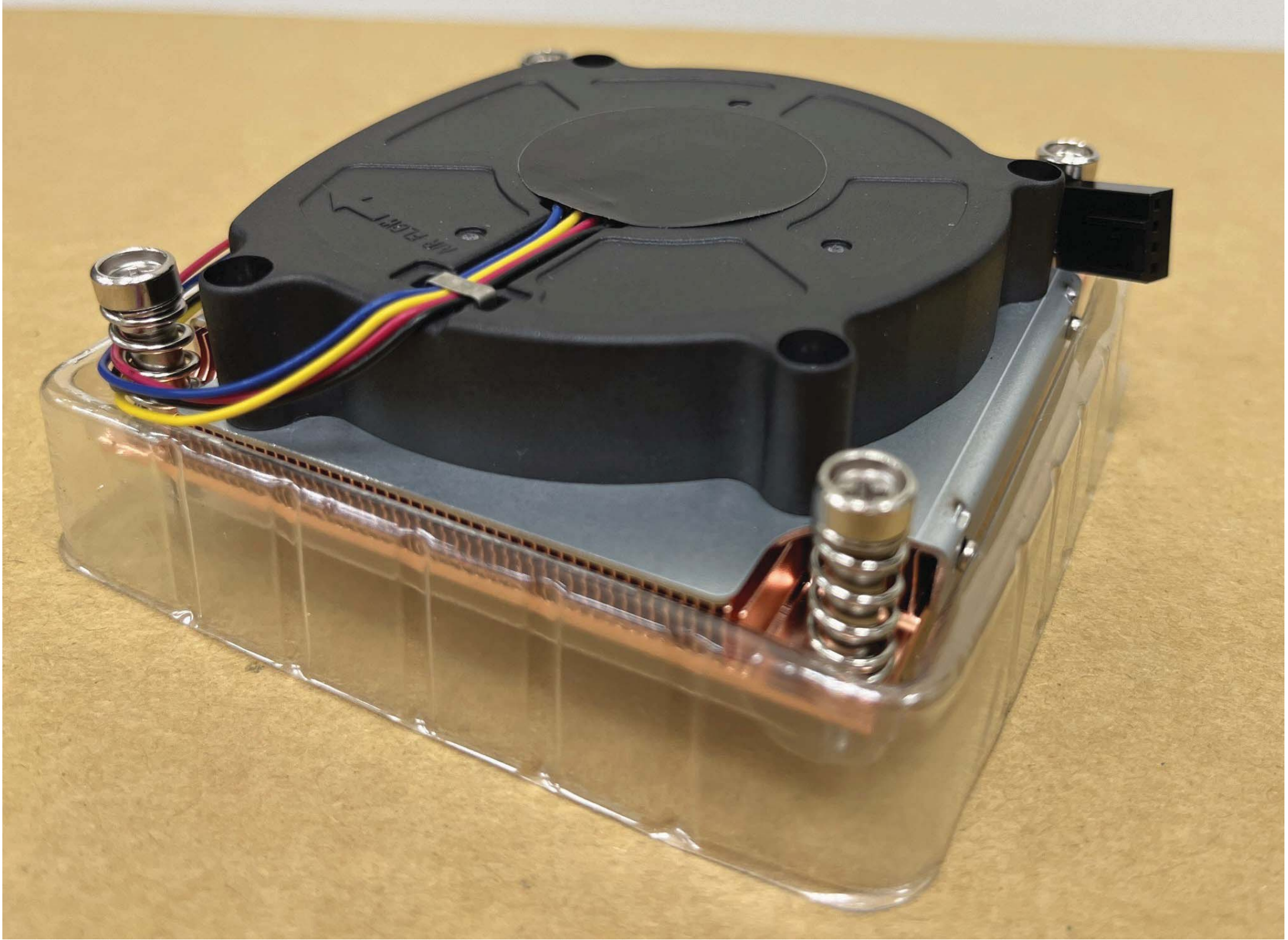

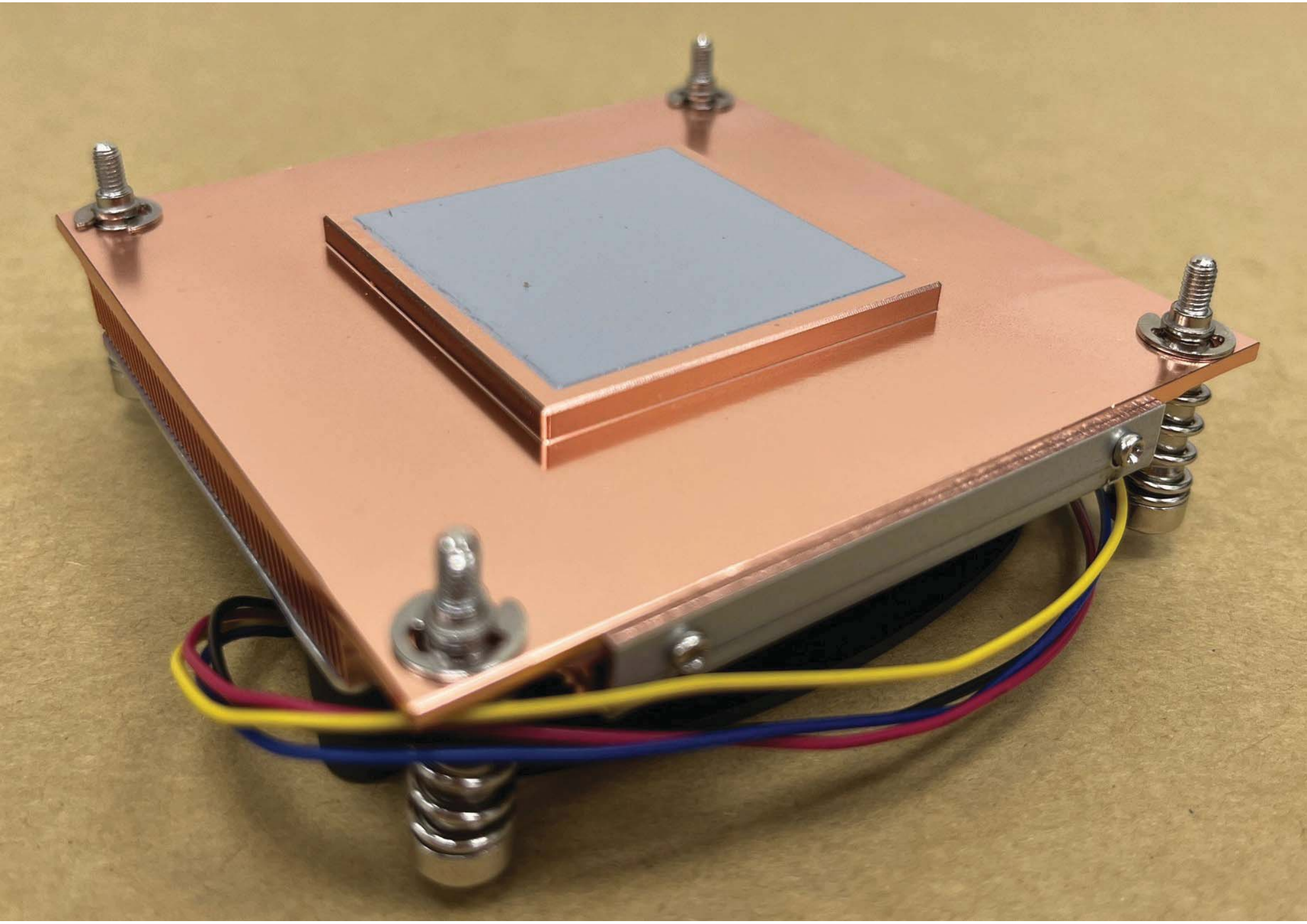

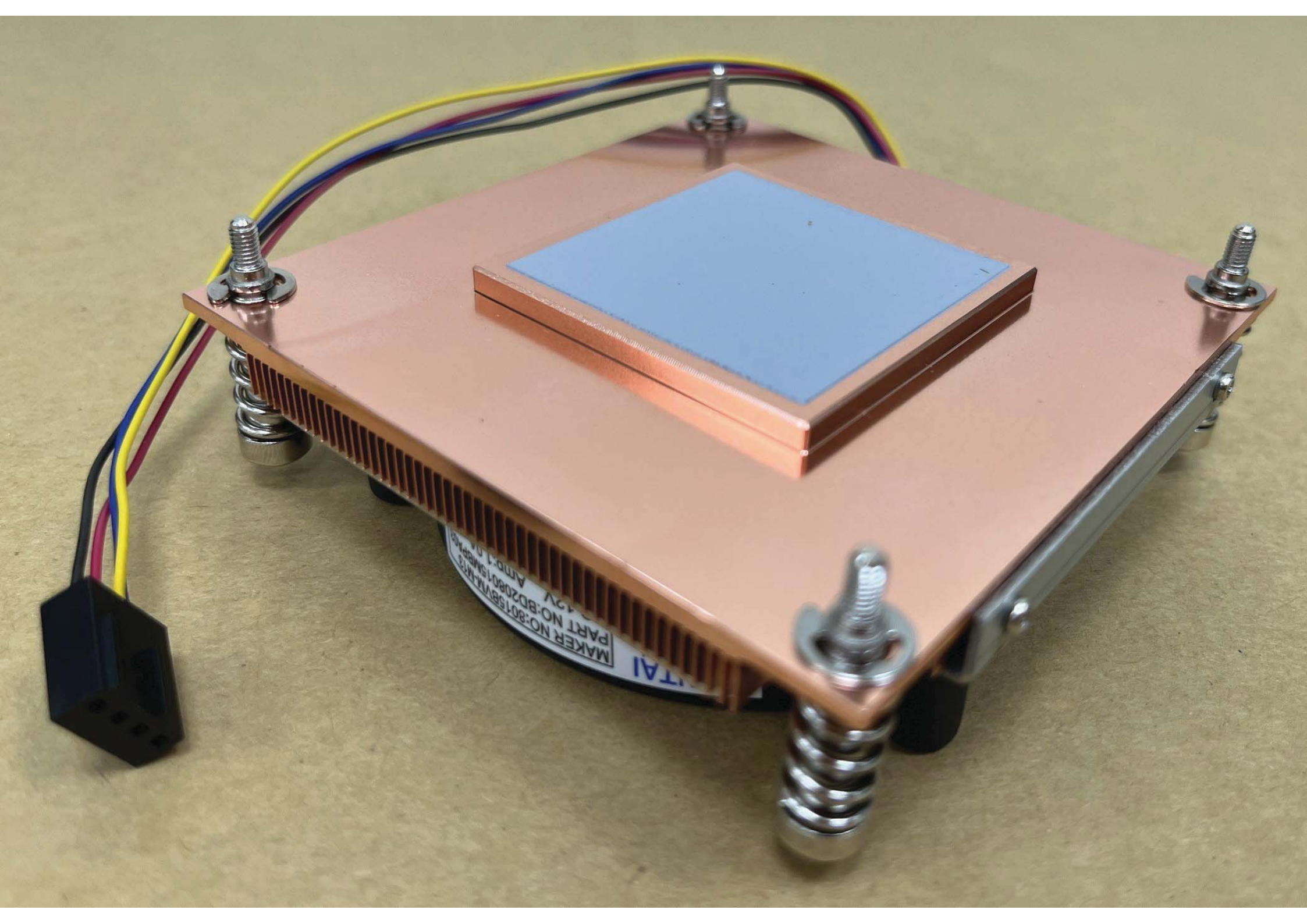
MAKER NO:8015BVMLMH2
PART NO:BD20801SMBBM2

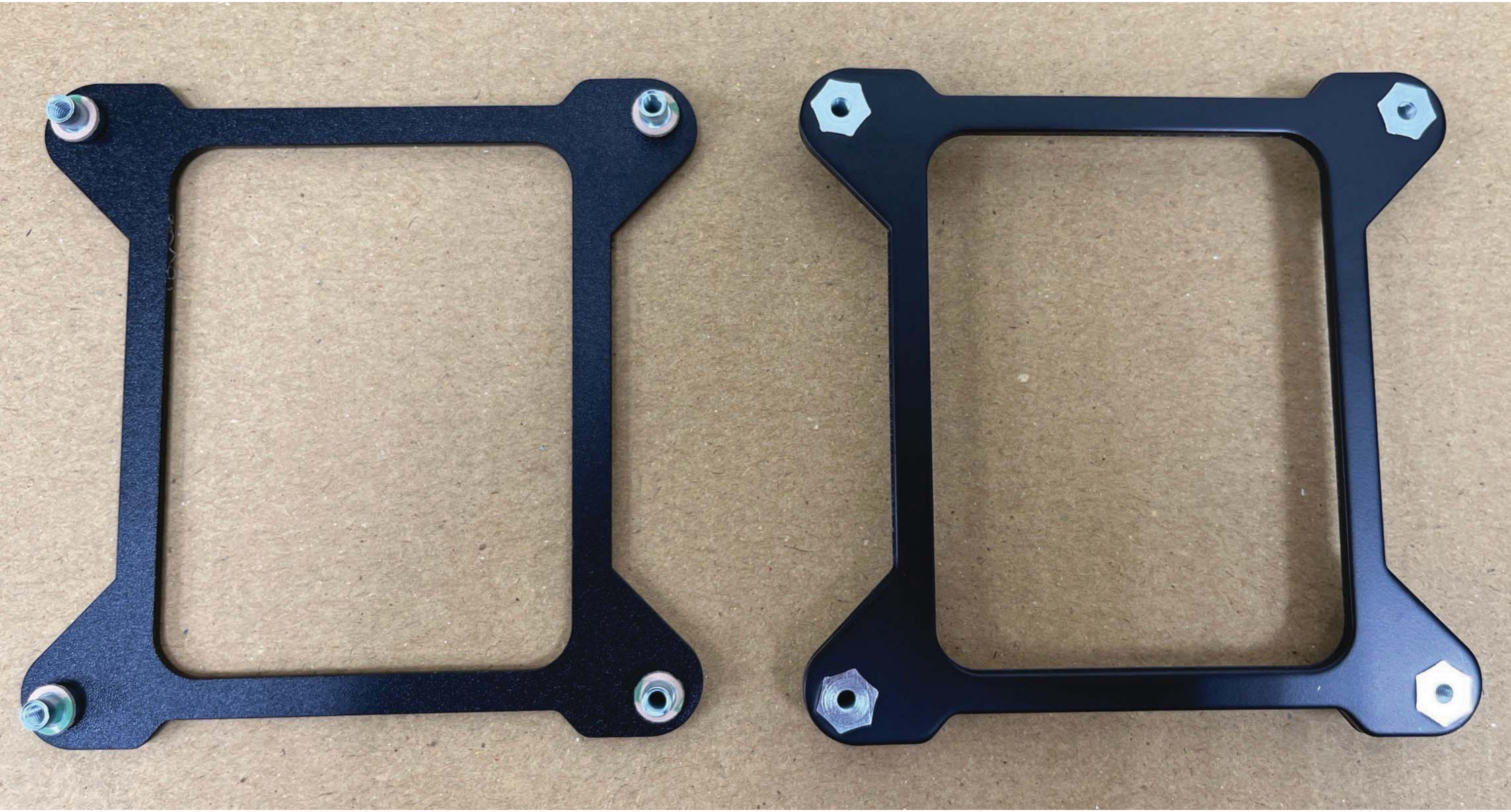



鑫旭科技股份有限公司
FZtech Inc.
6F-1,No.496, BanNan Rd., Jung He city,Taipei, Taiwan,235,R.O.C
Tel: +886 2 2228-7885 Fax: +886 2 2228-8938
Website: www.FZtech.com.tw

FZtech®
Ease up your life

Approval Sheet

客戶名稱 CUSTOMER	安勤科技股份有限公司
客戶物料編號 CUSTOMER P/N	E1961121650008R

Issued by	Approved by
Ruby.Chen	

Doc. No	FZT240621001
Issued Date	Jun. 21. 2024
Version	A1

鑫旭科技股份有限公司
FZtech Inc.
6F-1,No.496, BanNan Rd., Jung He city,Taipei, Taiwan,235,R.O.C
Tel: +886 2 2228-7885 Fax: +886 2 2228-8938
Website: www.FZtech.com.tw

Revision History

Date	Rev.	SITE	Description of change
2024/06/21	A1		First Release

安勤科技股份有限公司

機構件承認書內容

QD4-074 Rev.A4

項次	項目	內容	
必備項目			
1	封面	依供應商樣品承認封面（QD4-015）執行。	
2	供應商承認書內容	指本頁。	
3	圖面	圖面內容： 1. 需簽署(核准)完整、標示完整(尺寸、公差、版本)。 2. 需註明顏色、色差公差值、材質規格、料厚、料號、品名、機種及材料所需之表面處理資訊。 3. 需標註重點尺寸。 4. 需說明注意事項或重點檢驗項目(變形量、髮絲方向、毛邊方向、防火等級)。 5. 圖面版次需符合 NPDP 版本	
4	工程變更履歷	圖面版本歷史記錄。	
5	機構量測報告	FAI 尺寸量測。	
6	材質證明	材質證明文件與物性表文件。	
7	承認零件照片	照片不可模糊，多角度拍攝。	
選用項目(請於下面方框中勾選)			
8	機構量測報告(模具品)	☐	Cpk(重點尺寸量測)。
9	UL 證明文件	☐	UL 文件、防火等級。
10	衝擊實驗(Shock Test)報告	☐	Made by 3rd party。
11	包裝規範	■	紙箱規格、包裝形式、堆疊方式、堆疊高度。
12	落下實驗(Drop Test)報告	☐	Made by 3rd party。
13	包裝震動實驗	☐	主要為測試運輸過程是否造成損傷，以箱或棧板為基礎單位。

	估價圖面
	樣品圖面
	參考圖面
○	承認圖面
	更新圖面

REVISION			
MARK	DESCRIPTION	DATE	APPROVED

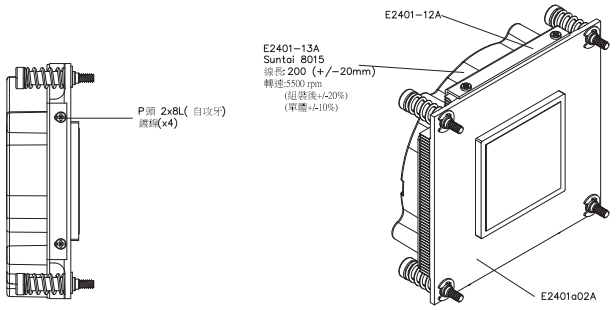

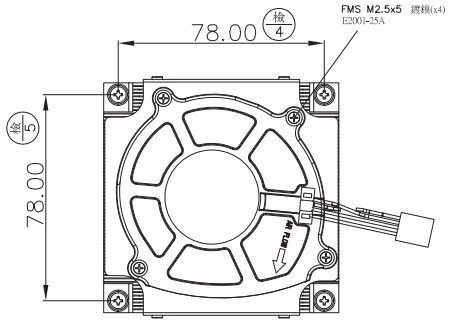

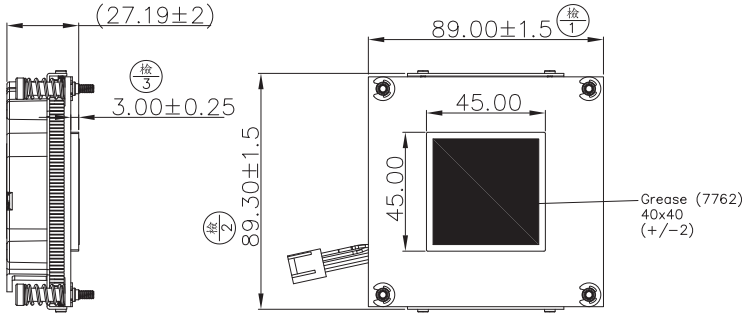

Note:

附背板R2301a07A
白盒包裝

	陽極處理
	液體烤漆
	粉體烤漆
	電鍍鎳
	抗氧化

FZT No.		
Customer No.	E1961121650008R	

鑫旭科技股份有限公司 www.FZtech.com.tw/www.FZled.com.tw			MTL. SPEC.	UNSPECIFIED TOL'S >0, ±0.10 ; >30, ±0.30 >3, ±0.15 ; >50, ±0.40 >10, ±0.20 ; >100, ±0.50 ANGULAR ±0.50°	MODEL NO: Freezer3150
APPROVED BY	AlanLin	20240416	UNIT mm	DRAWING NAME Assembly	
CHECKED BY	AlanLin	20240416			
DESIGN BY	Wade	20240416	SCALE 1:1	DRAWING NO. E2401a12	REV A
DRAWN BY	Ruby	20240416	SIZE A1		SHEET 1/1

工 程 變 更 履 歷

PART NO.	REV.	SITE	REMARK	DESIGNED	APPROVE	DATE
E1961121650008R	A1		A1新版	Wade	Alan Lin	20240416

	估價圖面
	樣品圖面
	參考圖面
○	承認圖面
	更新圖面

REVISION			
MARK	DESCRIPTION	DATE	APPROVED

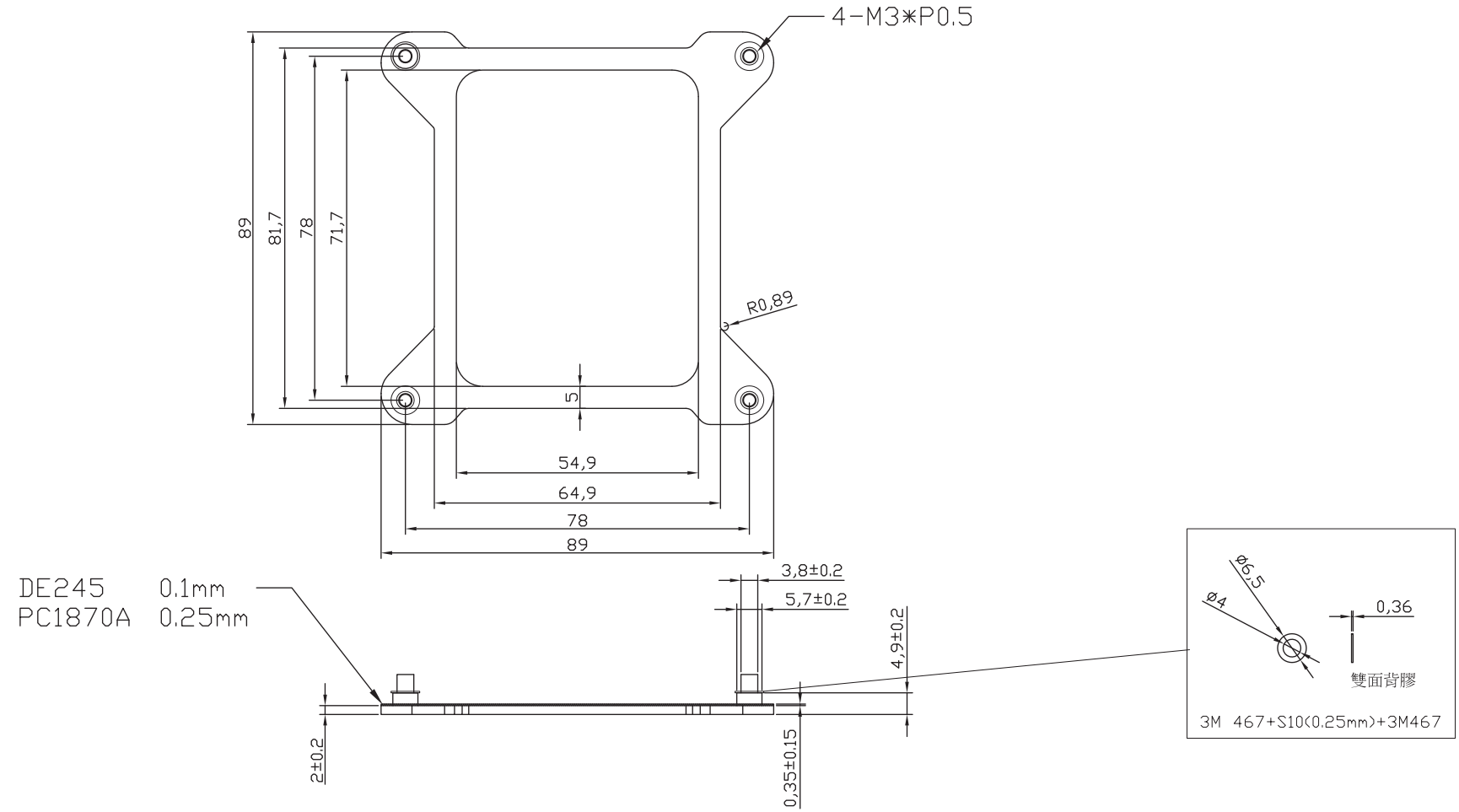

	陽極處理
	液體烤漆
	粉體烤漆
	電鍍鎳
	抗氧化

Note:
電著黑色

FZT No.	
Customer No.	

鑫旭科技股份有限公司 www.FZtech.com.tw/www.FZled.com.tw			MTL. SPEC. SPCC	UNSPECIFIED TOL'S >0, ±0.20 ; >200, ±0.80 >10, ±0.35 ; >500, ±1.00 >50, ±0.50 ANGULAR ±0.50°	MODEL NO. LGA 1700
APPROVED BY	Alan Lin	20231212	UNIT mm	DRAWING NAME Back plate_9.05mm_spacer	
CHECKED BY	Alan Lin	20231212			
DESIGN BY	Wade	20231212	SCALE 1:1	DRAWING NO. R2301a07	REV A
DRAWN BY	Ruby	20231212	SIZE A3		SHEET 1/1

	估價圖面
	樣品圖面
	參考圖面
○	承認圖面
	更新圖面

REVISION			
MARK	DESCRIPTION	DATE	APPROVED

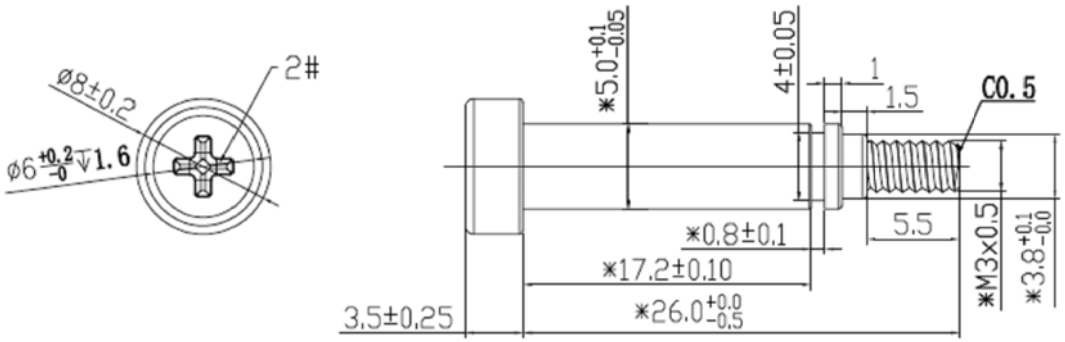

Note:

	陽極處理
	液體烤漆
	粉體烤漆
○	電鍍鎳
	抗氧化

FZT No.	
Customer No.	

鑫旭科技股份有限公司
www.FZtech.com.tw/www.FZled.com.tw

MTL SPEC.	SAE 1018	UNSPECIFIED TOL'S	>0, ±0.10 ; >30, ±0.30 >3, ±0.15 ; >50, ±0.40 >10, ±0.20 ; >100, ±0.50 ANGULAR ±0.50'	MODEL NO.	Freezer 1U
APPROVED BY	Alan Lin	20230313	UNIT mm	DRAWING NAME	Screw
CHECKED BY	Alan Lin	20230313			
DESIGN BY	Wade	20230313	SCALE 1:1	DRAWING NO.	R2301a01
DRAWN BY	Ruby	20230313	SIZE A0	REV	A
				SHEET	1/1

	估價圖面
	樣品圖面
	參考圖面
○	承認圖面
	更新圖面

REVISION			
MARK	DESCRIPTION	DATE	APPROVED

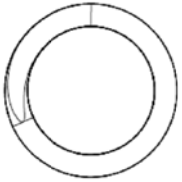

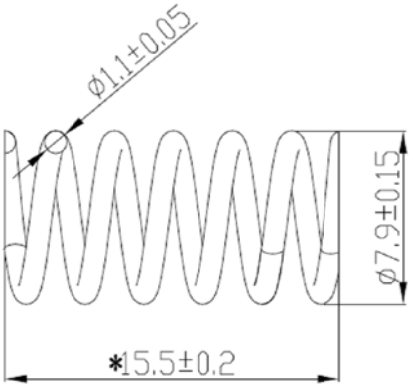

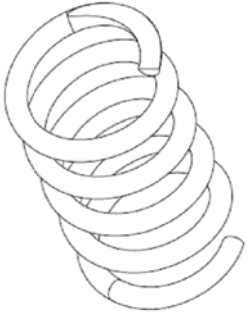

精度 CLASS	公差 TOLERANCE			
	I	II	III	IV
3 以下	0.03	0.05	0.10	0.20
3.01~10	0.05	0.08	0.15	0.25
10.01~30	0.08	0.10	0.20	0.30
30.01~50	0.10	0.20	0.30	0.40
50.01~100	0.15	0.25	0.40	0.50
100.01~250	0.20	0.30	0.50	0.60
未註尺寸公差		±0.20		
未註孔徑公差		±0.10		
未註角度公差		±1°		

工作圈数	n=4	自由高度	H0=15.5
总圈数	n1=6	压缩后高度	
旋向	左旋	节径	

技术要求：

1. 标有"*"的尺寸为检验重点.
2. 此弹簧端部型式为并紧, 磨平, 支承圈为1圈(YI).
3. 热处理后硬度HRC40~50°, 精度等级2级.

	陽極處理
	液體烤漆
	粉體烤漆
○	電鍍鎳
	抗氧化

Note:

FZT No.		
Customer No.		

鑫旭科技股份有限公司
www.FZtech.com.tw/www.FZled.com.tw

MTL. SPEC.	彈簧鋼	UNSPECIFIED TOL'S >0, ±0.10 ; >30, ±0.30 >3, ±0.15 ; >50, ±0.40 >10, ±0.20 ; >100, ±0.50 ANGULAR ±0.50°			MODEL NO:	Freezer 1U
APPROVED BY	Alan Lin	20230313	UNIT	mm	DRAWING NAME	Spring
CHECKED BY	Alan Lin	20230313				
DESIGN BY	Wade	20230313	SCALE	1:1	DRAWING NO.	R2301a01
DRAWN BY	Ruby	20230313	SIZE	A0	REV	A
					SHEET	1/1

	估價圖面
	樣品圖面
	參考圖面
○	承認圖面
	更新圖面

REVISION			
MARK	DESCRIPTION	DATE	APPROVED

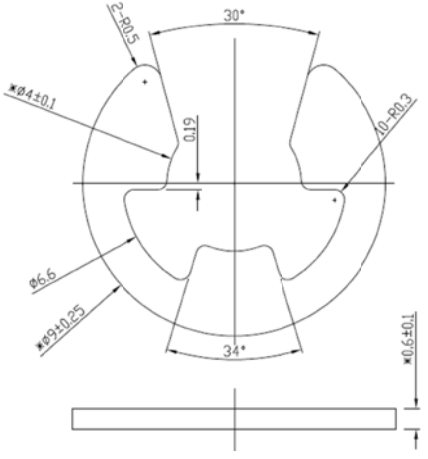

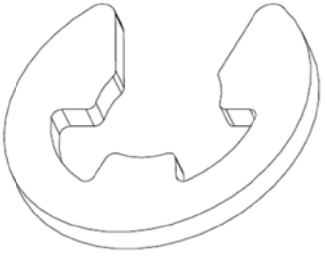

Note:

	陽極處理
	液體烤漆
	粉體烤漆
○	電鍍鎳
	抗氧化

FZT No.		
Customer No.		

鑫旭科技股份有限公司
www.FZtech.com.tw/www.FZled.com.tw

MTL. SPEC.	SK7	UNSPECIFIED TOL'S >0, ±0.10 ; >30, ±0.30 >3, ±0.15 ; >50, ±0.40 >10, ±0.20 ; >100, ±0.50 ANGULAR ±0.50°	MODEL NO:	Freezer 1U	
APPROVED BY	Alan Lin	20230313	UNIT	mm	DRAWING NAME: E clip
CHECKED BY	Alan Lin	20230313			
DESIGN BY	Wade	20230313	SCALE	1:1	DRAWING NO.: R2301a01 / REV: A / SHEET: 1/1
DRAWN BY	Ruby	20230313	SIZE	A0	

	估價圖面
	樣品圖面
	參考圖面
○	承認圖面
	更新圖面

REVISION			
MARK	DESCRIPTION	DATE	APPROVED

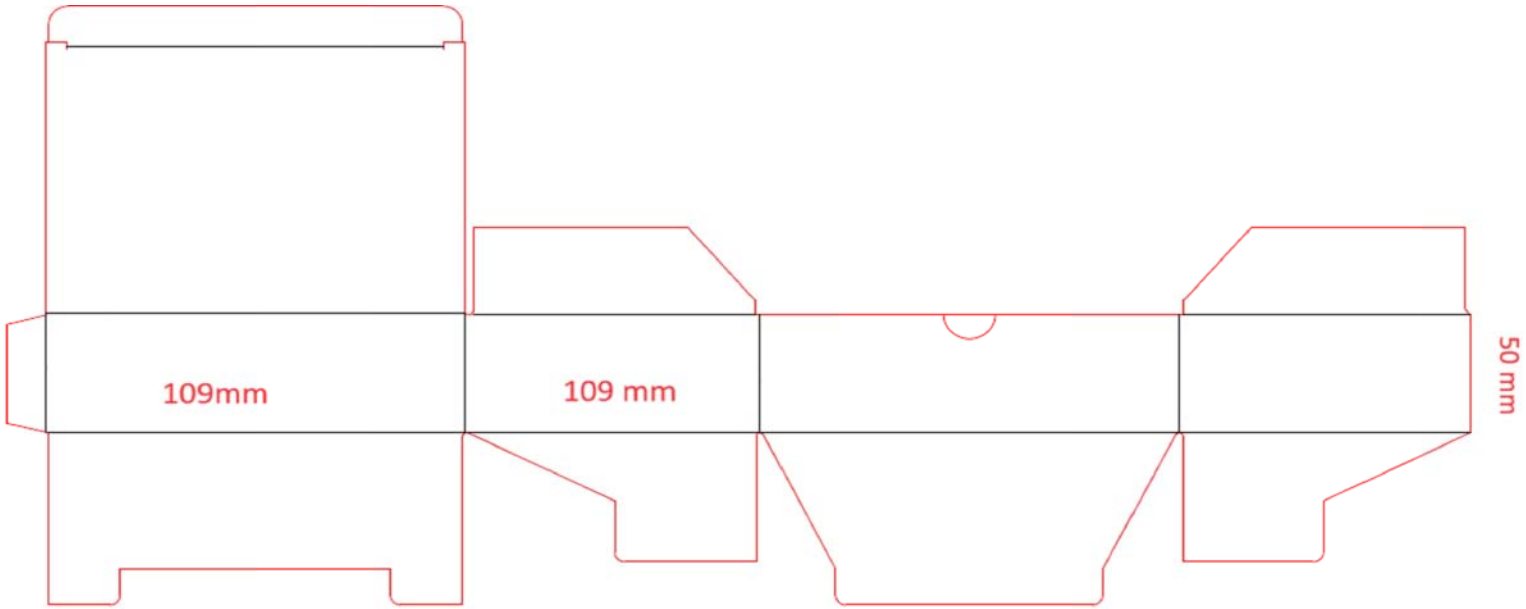

Note:

公差+/-5 mm

	陽極處理	
	液體烤漆	
	粉體烤漆	
	電鍍鎳	
	抗氧化	

FZT No.	
Customer No.	

鑫旭科技股份有限公司
www.FZtech.com.tw/www.FZled.com.tw

APPROVED BY	AlanLin	20240103	
CHECKED BY	AlanLin	20240103	
DESIGN BY	Wade	20240103	
DRAWN BY	Ruby	20240103	

MTL SPEC.

UNSPECIFIED TOL'S
>0, ±0.10 ; >30, ±0.30
>3, ±0.15 ; >50, ±0.40
>10, ±0.20 ; >100, ±0.50
ANGULAR ±0.50'

MODEL NO: Freezer3150

UNIT: mm

DRAWING NAME: White Box

SCALE: 1:1

SIZE: A1

DRAWING NO.: E2401a03

REV: A

SHEET: 1/1

鑫旭科技股份有限公司 FAI: First Article Data Report

料號	E1961121650008R	材質	CU1100	型號	3150	日期	2024/6/21	頁次	1
品名	PU cooler 4P/12V/側吹FAN 20CM CU 65V								

NO	Drwg Loc	DIMINSION SPECIFICATION					檢驗儀器	量測值 INSPECTION RESULTS				
		General DIM	.+TOL	VALUE	.-TOL	VALUE	CHECKING INSTRUMENT	1	2	3	4	5
1	6D	89.00	1.50	90.50	1.50	87.50	游標卡尺	89.08	89.10	89.12		
2	6D	89.30	1.50	90.80	1.50	87.80		89.42	89.40	89.44		
3	5D	3.00	0.25	3.25	0.25	2.75		3.06	3.08	3.04		
4	3C	78.00	0.40	78.40	0.40	77.60		78.08	78.05	78.10		
5	3D	78.00	0.40	78.40	0.40	77.60		78.12	78.06	78.04		
6												
7												
8												
9												
10												
11												
12												
13												
14												
15												
16												
17												
18												
19												
20												
21												
22												
23												
24												
25												
26												
27												
28												
29												
30												
備註:												

铜陵有色金属集团股份有限公司金威铜业分公司质量保证书

PRODUCT QUALITY CERTIFICATE OF JINVI COPPER CORPORATION, TONGLING NONFERROUS METALS GROUP CO.LTD

订单号(CUSTOMER ORDER)	JVS-20-B-208	包装日期(DATE)	2020-09-07
合金牌号(ALLOY)	C1100	执行标准(STANDARD)	JIS
批　　号(BATCH NO.)	0705931100-0-0-A-00	件　　数(QUANTITY)	
状　　态(TEMPER)	H/2	毛　　重(G.WEIGHT)	1606KG
规　　格(SIZE)	0.3x620x0mm	净　　重(NET.WT)	1571KG

主 要 产 品 指 标(MAIN PARAMERTER)

物理性能

厚度公差(THICKNESS TOLERANCE)	-0.009～-0.005	mm
宽度公差(WIDTH TOLERANCE)		mm
硬度(HARDNESS)	90	HV
导电率(CONDUCTIVITY)	98.5	% IACS
晶粒度(GRAIN SIZE)		um
表面粗糙度(SURFACE ROUGHNESS)		um
杯突值(CUPPING)		mm
抗拉强度(TENSILE STRENGTH)	287	MPa
延伸率(ELONGATION)	27.5	%
侧弯(SIDE CAMBER)		mm/m
弯曲试验(BENDING TEST)		
屈服强度(YIELD STRENGTH)		Mpa
软化点(SOFTENING)		°C
密度(DENSITY)		
板形(FLATNESS)		I

化学性能

Cu%	Zn%	Pb%	Fe%	Ni%	Cd%	Cr%	P%	Ag%	Bi%
99.986	0.0015	0.00041	0.0011	0.00021			0.0010		0.00038

Sb%	As%	Sn%	S%	Al%	Si%	Se%	Te%	Co%	Mn%
0.00010	0.00058	0.00035	0.00097						

Ti%	Mg%	Zr%	C%	O%
				0.0074

说明：本质量保证书请予以妥善保管，如对我公司产品品质有异议，持此质量证明书在标准规定的日期内与我公司联系，本公司将竭诚为您服务。本质量证明书盖章有效(复印件无效)。

Note：This quality certificate must be kept properly.If you have any questions please contact us within the valid date of the standard prescription.We'll do our utmost serve you.This quality certificate is only valid with stamp. Copies are not valid.

签署人(SANCTION): 胡铜生

签署日期(DATE): 2020-10-20

地址(Address):安徽省铜陵市经济技术开发区翠湖2路

(2nd Cuihu Road,Economic & Technological Development Zone,Tongling,Anhui,China)

电话(Tel):+86-562-5864227　　传真(Fax):+86-562-5864488

FZtech®
Ease up your life

鑫旭科技股份有限公司/Fztech Inc.

Certificate of Conformace

檢驗日期 : 2024/07/01
Inspection Date

檢驗人員 : Odin
Inspector

部門主管 : Wade
The Head of the Department

採購or製令編號 :
Purchase Order or Manufacture Order

材料類別 : CU+SPCC+風扇
Classification of Materials

料件編號 : ATE2401TZ01A
Part No.

檢驗程度 : AQL:1.0
Inspection Level

客戶編號 : E1961121650008R
Customer ID

送驗數量 : 50 PCS
Lot Qty.

品名規格 : Freezer3150/Assembly
Model Name

抽驗數量 : 13 PCS
Sampling Size

判定結果 : OK
Result

合格數量 : 13 PCS
Qualified Qty.

備註 :
Remark

特採確認 :
Accept On Deviation

序號 No.	檢驗項目 / 名稱 Inspection Items/ Name	缺點數量 Defect Qty.	AQL	Ac / Rc	檢驗量 Amount of Inspection	不良數量 Defective Qty.
1	尺寸,外觀 Overall Size/Appearance	0 PCS	1.0	0 Ac 1 Rc	5 PCS	0 PCS

	Q1	Q2	Q3	Q4	Q5	Q6	Q7	Q8
	89±1.5	89.3±1.5	3±0.25	78±0.4	78±0.4	89±0.5	81.7±0.5	78±0.5
1	89.06	89.22	3.04	78.00	78.00	89.04	81.74	78.08
2	89.04	89.22	3.06	78.00	78.02	89.04	81.78	78.04
3	89.08	89.30	3.00	78.06	78.00	89.00	81.72	78.10
4	89.06	89.26	3.08	78.08	78.10	89.06	81.66	78.02
5	89.04	89.22	3.00	78.02	78.02	89.04	81.70	78.02

	Q9	Q10	Q11	Q12	Q13	Q14		
	71.7±0.5	5±0.2	54.9±0.5	64.9±0.5	78±0.5	89±0.5	M3xP0.5*4	導熱膏
1	71.70	5.00	54.88	64.90	78.06	89.02	OK	OK
2	71.70	4.98	54.88	64.92	78.08	89.10	OK	OK
3	71.78	5.02	54.90	64.92	78.00	89.00	OK	OK
4	71.66	4.98	54.96	64.84	78.06	89.06	OK	OK
5	71.74	5.00	54.90	64.90	78.02	89.02	OK	OK

		風扇線長	RPM(單體轉速)	外觀
	雙面背膠	200±20mm	5500±10%	Appearance
1	OK	OK	5653	OK
2	OK	OK	5394	OK
3	OK	OK	5508	OK
4	OK	OK	5432	OK
5	OK	OK	5617	OK

REVISION			
MARK	DESCRIPTION	DATE	APPROVED

	估價圖面
	樣品圖面
	參考圖面
○	承認圖面
	更新圖面

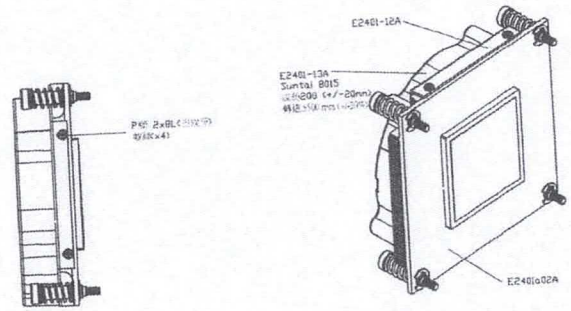

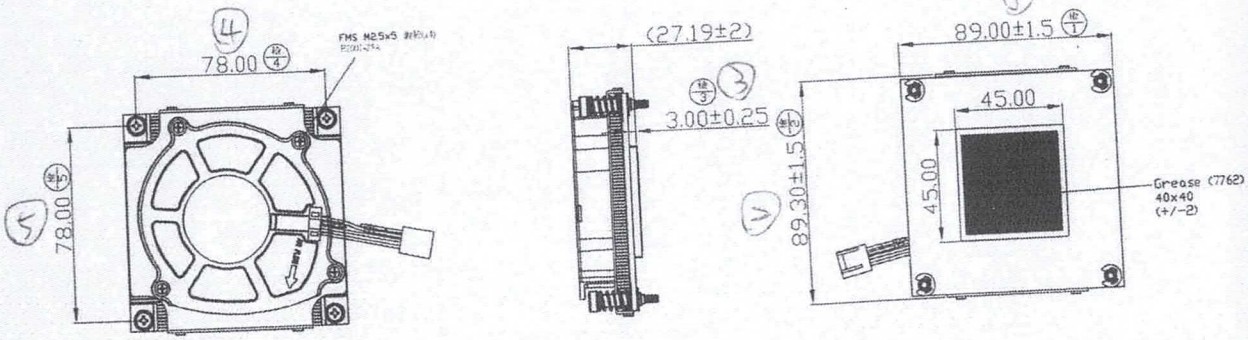

	陽極處理
	液體烤漆
	粉體烤漆
	電鍍鎳
	抗氧化

Note:

鑫旭科技股份有限公司 www.FZtech.com.tw/www.FZled.com.tw			MTL APPR.	UNSPECIFIED TOL'S >0. ±0.10 ; >30. ±0.30 >3. ±0.15 ; >50. ±0.40 >10. ±0.20 ; >100. ±0.80 ANGULAR ±0.50°	MODEL NO: Freezer3150
APPROVED BY	AlanLin	20240416	UNIT: mm	DRAWING NAME: Assembly	
CHECKED BY	AlanLin	20240416			
DESIGN BY	Wade	20240416	SCALE: 1:1	DRAWING NO: E2401a12	REV: A / SHEET: 1/1
DRAWN BY	Ruby	20240416	SIZE: A1		

FZT No.	
Customer No.	E1961121650008R

	估價圖面
	樣品圖面
	參考圖面
○	承認圖面
	更新圖面

MARK	REVISION DESCRIPTION	DATE	APPROVED

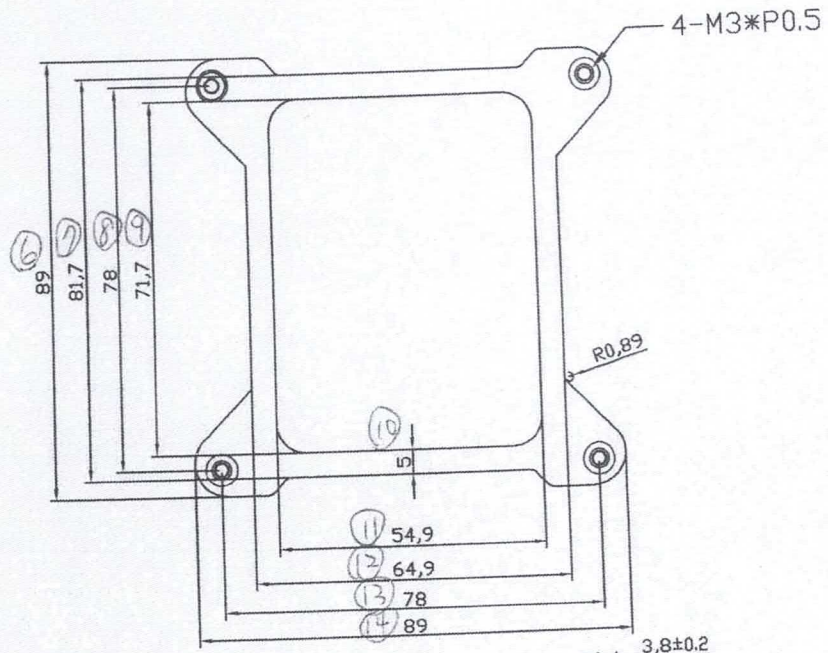

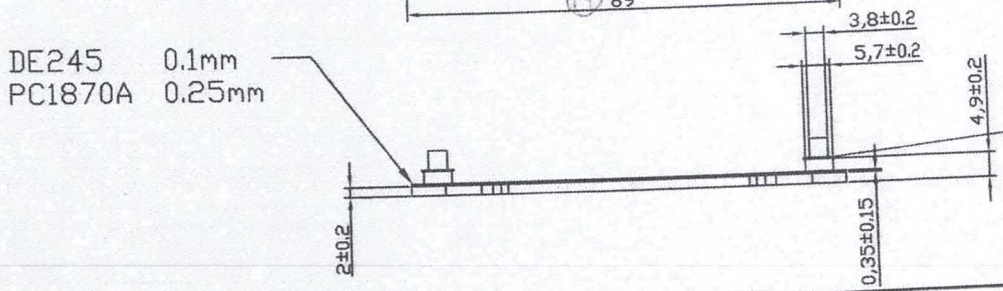

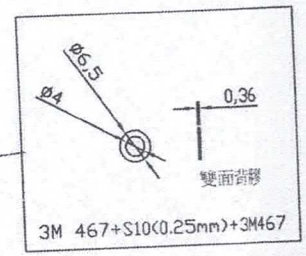

	陽極處理
	液體烤漆
	粉體烤漆
	電鍍鎳
	抗氧化

Note:
電著黑色

鑫旭科技股份有限公司 www.FZtech.com.tw/www.FZled.com.tw			MTL. SPEC: SPCC
APPROVED BY	Alan Lin	20231212	UNIT: mm
CHECKED BY	Alan Lin	20231212	
DESIGN BY	Wade	20231212	SCALE: 1:1
DRAWN BY	Ruby	20231212	SIZE: A3

UNSPECIFIED TOLS: >6, ±0.3; >30, ±0.80; >10, ±0.35; >500, ±1.00; >50, ±0.5; ANGULAR ±1.50°

MODEL NO: LGA 1700

DRAWING NAME: Back plate_9.05mm_spacer

DRAWING NO: R2301a07

REV: A

SHEET: 1/1

FZT No.	
Customer No.	

2.PERFORMANCE CHARACTERISTICS

RATED SPEED(RPM)	5500±10%RPM	(At 25℃,After 10 minutes)
AIR FLOW	15.79CFM (Avg)	Min:14.2CFM
STATIC PRESSURE	42.4mmH2O (Avg)	Min: 38.16mmH2O
SOUND PRESSURE NOISE	58.1 dB(A) (Avg)	Max:63.91dB(A)
	ACOUSTICAL NOISE MEASURING CONDITION: 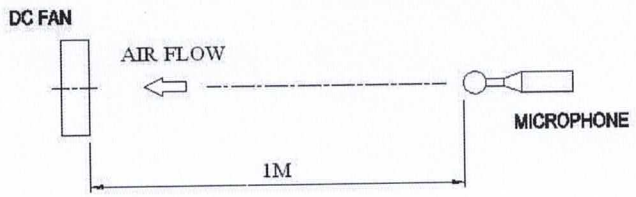 NOISE IS MEASURED AT RATED VOLTAGE IN FREE AIR IN ACOUSTICAL CHAMBER WITH LARSON DAVIS TYPE 824S SOUND LEVEL METER.	
INSULATION RESISTANCE PLASTIC FRAME	Min. 10MΩ at 500VDC between frame and (+) terminal.	
DIELECTRIC STRENGTH	Max. 5mA at 500VAC 60Hz 1 minute between frame and (+) terminal.	
LIFE EXPECTANCY(L10)	70,000 Hours, at 40℃, 15%~65%RH	
PROTECTION	☑ Automatic Restart	
	☑ Polarity Protection	
RoHS-Free Pb	RoHS compliance	
IP Protection Grade	(No) IP Protection	

3. Safety Approval

SAFETY	UL&CUL	TUV	CE
NO.	E343773	√	√

尚太有限公司

SUNTAI-FAN PTY., LTD.

SPECIFICATION FOR APPROVAL

CUSTOMER: 鑫 旭

CUSTOMER PART NO:

CONFIRMATION SIGNATURE	FILE NO:		REV:A
Please confirm your acceptance of this approval sheet by return fax or mail	APPROVED DATE	CHECKED DATE	PREPARED DATE
	尚太有限公司 承認書 專用章	研發部 2024.04.18 KuangYu	業務部 2024.04.18 Joe / 業務部 2024.04.18 Rebecca

MAKER:

MAKER MODEL NO : 8015BVM-M13

SUPPLIER: SUNTAI 尚太有限公司 SUNTAI

SUPPLIER PART NO : BD208015MBPA03

DESCRIPTION: Blower FAN DC 12V 8015

THIS OFFER IS MADE ACCORDING TO YOUR CURRNT IN QUIRY.
UNLESS OTHERWISE REVISED, THIS SPECIFICATION WILL BE FINAL FOR ALL FUTURE PRODUCTION OF ORDERS FROM YOUR RESPECTED COMPAY.
KIDLY STUDY IN DETAILS AND RETURN TO US THE DUPLICATE DULLY SIGNED AS YOUR CONFIRMATION OF SAME.

COMPANY: 9F.-3, No.237, Sec. 1, Datong Rd., Xizhi Dist., New Taipei City 221, Taiwan (22160)
TEL:886-2-8691-6918 FAX: 886-2-8691-6122

1.SPECIFICATION

1-1.MECHANICAL CHARACTERISTICS

MOTOR DESIGN	DC brushless 8 pole motor design
BEARING SYSTEM	Two Ball Bearing System
MATERIAL OF FRAME	Thermoplastic PBT of UL 94V-0
MATERIAL OF FAN BLADE	Thermoplastic PBT of UL 94V-0
DIRECTION OF ROTATION	Counter-clockwise viewed from front of fan blade
WEIGHT	61g

1-2. ELECTRICAL CHARACTERISTICS

RATED VOLTAGE	12 VDC
INPUT CURRENT	0.90A(MAX:1.0A)
CURRENT ON LABEL	1.0A
INPUT POWER	10.8W(MAX:12.0W)
OPERATING VOLTAGE RANGE	9.6~13.2VDC
STARTING VOLTAGE	9.6VDC(At 25℃,POWER ON/OFF)
OPERATING TEMPERATURE/ HUMIDITY RANGE	-10℃ ~ +70℃ / 15% ~ 65%RH
STORAGE TEMPERATURE/ HUMIDITY RANGE	-40℃ ~ +70℃ / 15% ~ 65%RH

2.PERFORMANCE CHARACTERISTICS

RATED SPEED(RPM)	5500±10%RPM	(At 25℃,After 10 minutes)
AIR FLOW	15.79CFM (Avg)	Min:14.2CFM
STATIC PRESSURE	42.4mmH2O (Avg)	Min: 38.16mmH2O
SOUND PRESSURE NOISE	58.1 dB(A) (Avg)	Max:63.91dB(A)
	ACOUSTICAL NOISE MEASURING CONDITION: 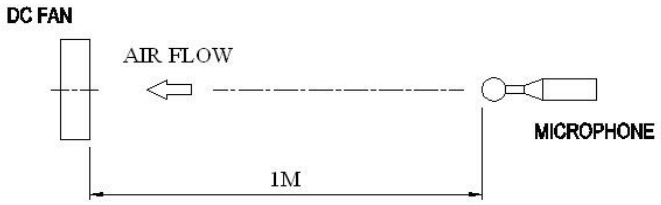 NOISE IS MEASURED AT RATED VOLTAGE IN FREE AIR IN ACOUSTICAL CHAMBER WITH LARSON DAVIS TYPE 824S SOUND LEVEL METER.	
INSULATION RESISTANCE PLASTIC FRAME	Min. 10MΩ at 500VDC between frame and (+) terminal.	
DIELECTRIC STRENGTH	Max. 5mA at 500VAC 60Hz 1 minute between frame and (+) terminal.	
LIFE EXPECTANCY(L10)	70,000 Hours, at 40℃, 15%~65%RH	
PROTECTION	☑ Automatic Restart	
	☑ Polarity Protection	
RoHS-Free Pb	RoHS compliance	
IP Protection Grade	(No) IP Protection	

3. Safety Approval

SAFETY	UL&CUL	TUV	CE
NO.	E343773	√	√

4.PERFORMANCE CURVES

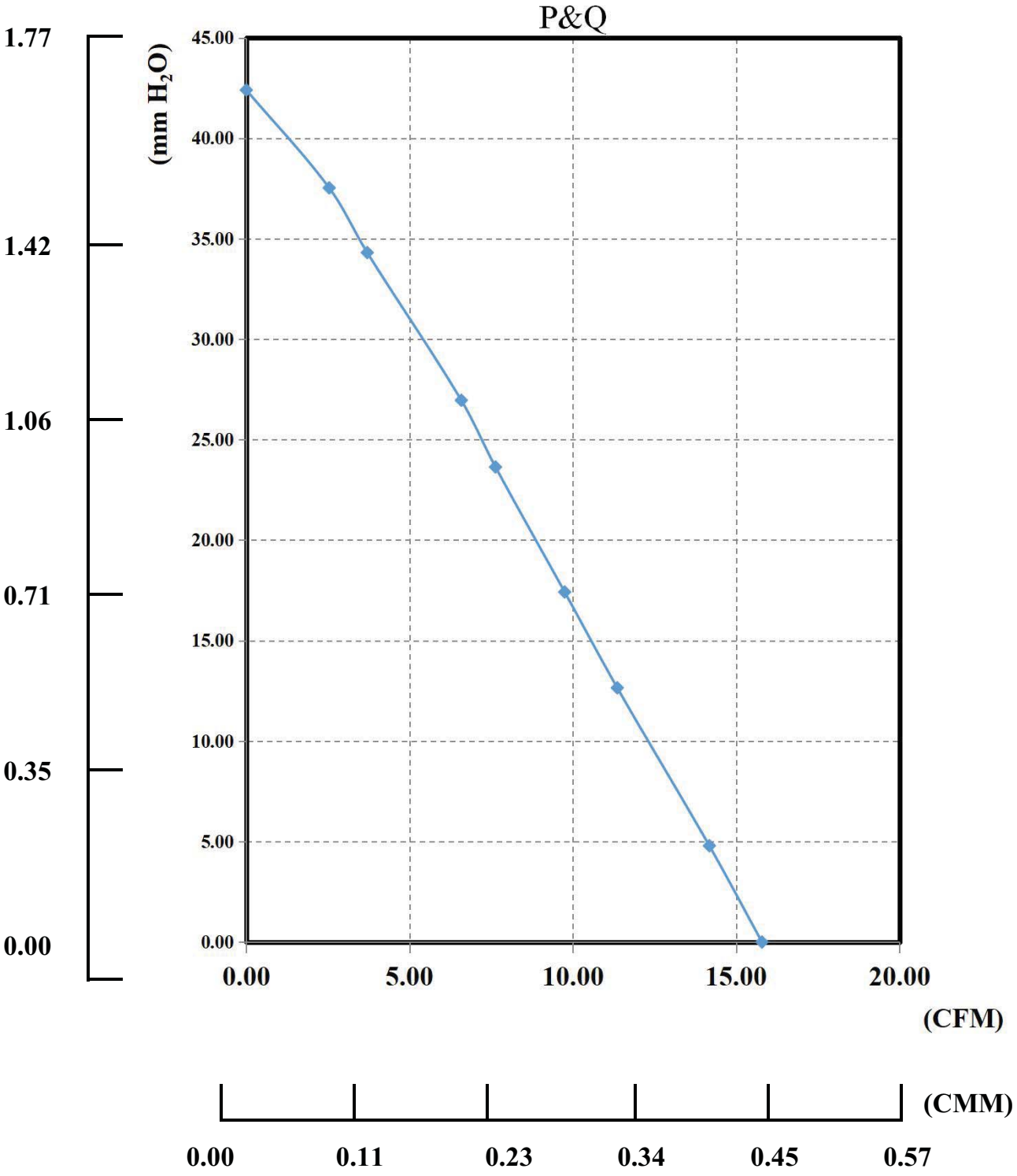

*TEST CONDITION: INPUT VOLTAGE ---------- OPERATION VOLTAGE
TEMPERATURE ---------- ROOM TEMPERATURE
HUMIDITY ---------- 65%RH

5.DIMENSION

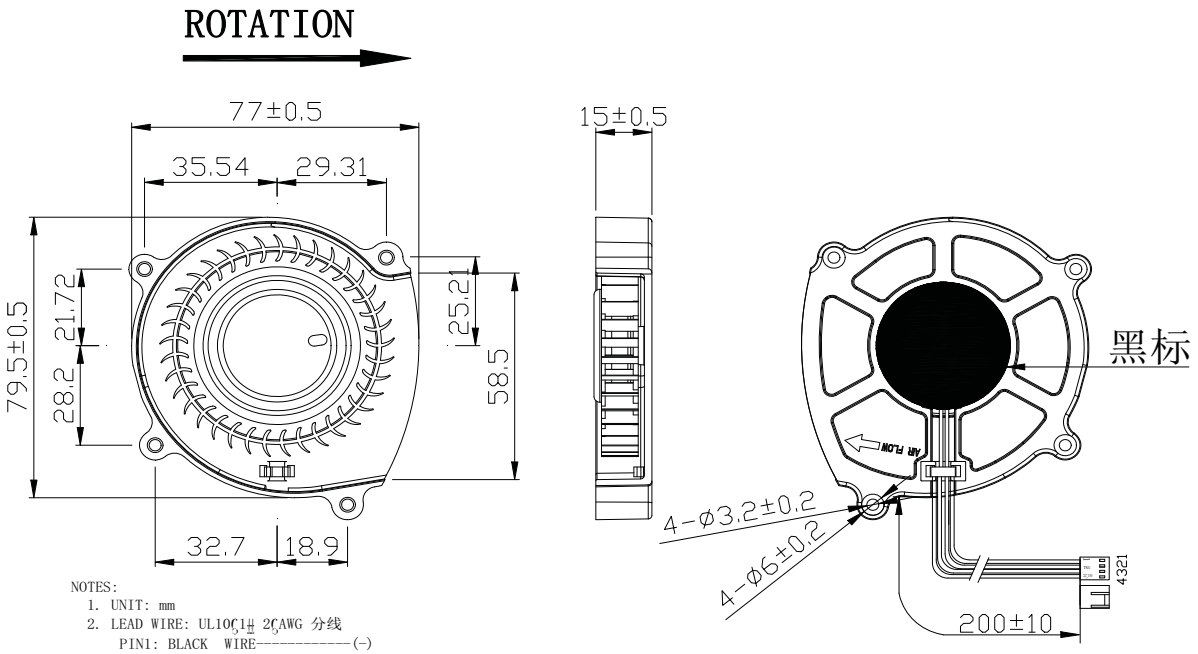

NOTES:
1. UNIT: mm
2. LEAD WIRE: UL1007# 22AWG 分线
   PIN1: BLACK WIRE----------(-)
   PIN2: RED WIRE----------(+)
   PIN3: YELLOW WIRE----------(FG)
   PIN4: BLUE WIRE----------(PWM)
3. HOUSING: 2510-4P(黑色歪脚)
4. THIS PRODUCT IS RoHS COMPLIANT

6.LABEL

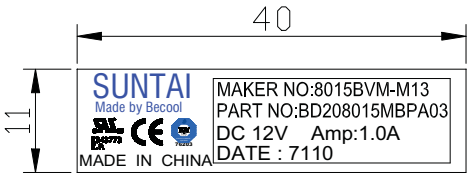

LABEL位置：导线朝下方向，标签横贴于扇框上方的侧面，尺寸：40*11mm

日期标											
年	月	日(十)	日(個)								
4	3	2	1								
年	13	14	15	16	17	18	19	20	循环使用		
	3	4	5	6	7	8	9	A			
月	1	2	3	4	5	6	7	8	9	10	11	12
	1	2	3	4	5	6	7	8	9	A	B	C
日(十)	0	1	2	3								
	0	1	2	3								
日(個)	0	1	2	3	4	5	6	7	8	9		
	0	1	2	3	4	5	6	7	8	9		

7.SENSOR SPECIFICATION

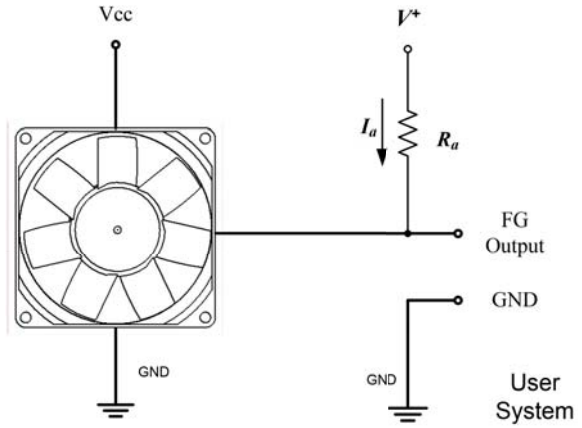

★ Ra：Pull up Resistor
★ Ra≥V+/Ia(max)

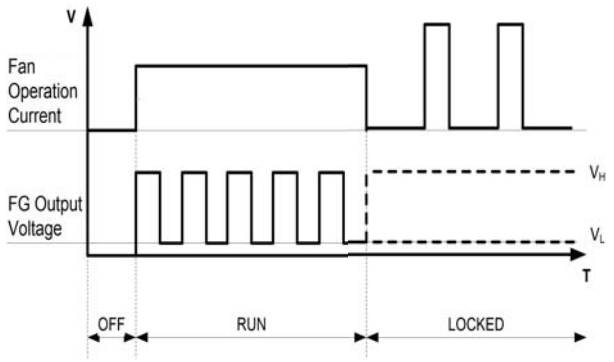

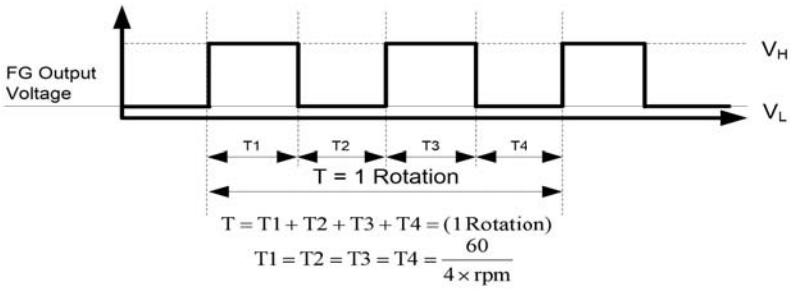

$$T = T1 + T2 + T3 + T4 = (1\,\text{Rotation})$$

$$T1 = T2 = T3 = T4 = \frac{60}{4 \times \text{rpm}}$$

■ Electrical Characteristics：at Ta=25℃， Vcc=12V

Parameter	Ratings			Unit
	Min	Type	Max	
FG Supply Voltage (V^+)	--	--	13.2	V
FG Output Current (Ia)	--	--	5	mA
FG Output (V_L)	--	--	0.6	V
FG Output (V_H)	--	(v+)±10%	--	V

7.PWM SPECIFICATION

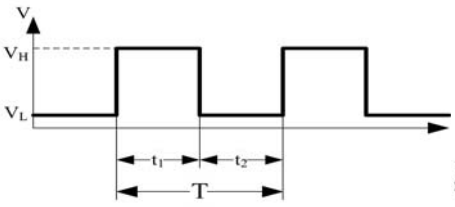

PWM Signal

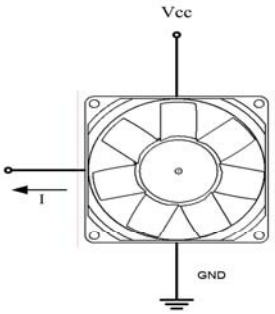

PWM Signal Table

Parameter	*Min*	*Typical*	*Max*	*Unit*
Fpwm	*20K*	*25K*	*30K*	*Hz*
V_H	--	*6*	--	*V*
V_L	--	--	*0.6*	*V*
I	--	*6*	--	*mA*
D.C.	*0*	--	*100*	*%*

1.*Time Period*： $T = \frac{1}{F_{pwm}} = t_1 + t_2$ (se

2.*Duty Cycle*： $D.C = \frac{t_1}{t_1 + t_2} \times 100\,\%$

★Electrical Characteristics at Ta = 25℃

★Suggest O.C. Circuit

★ Ra：Pull up Resistor

■ Reference

Duty	Speed R.P.M	
0~10%	600	±400
50%	3300	±600
100%	5500	±550

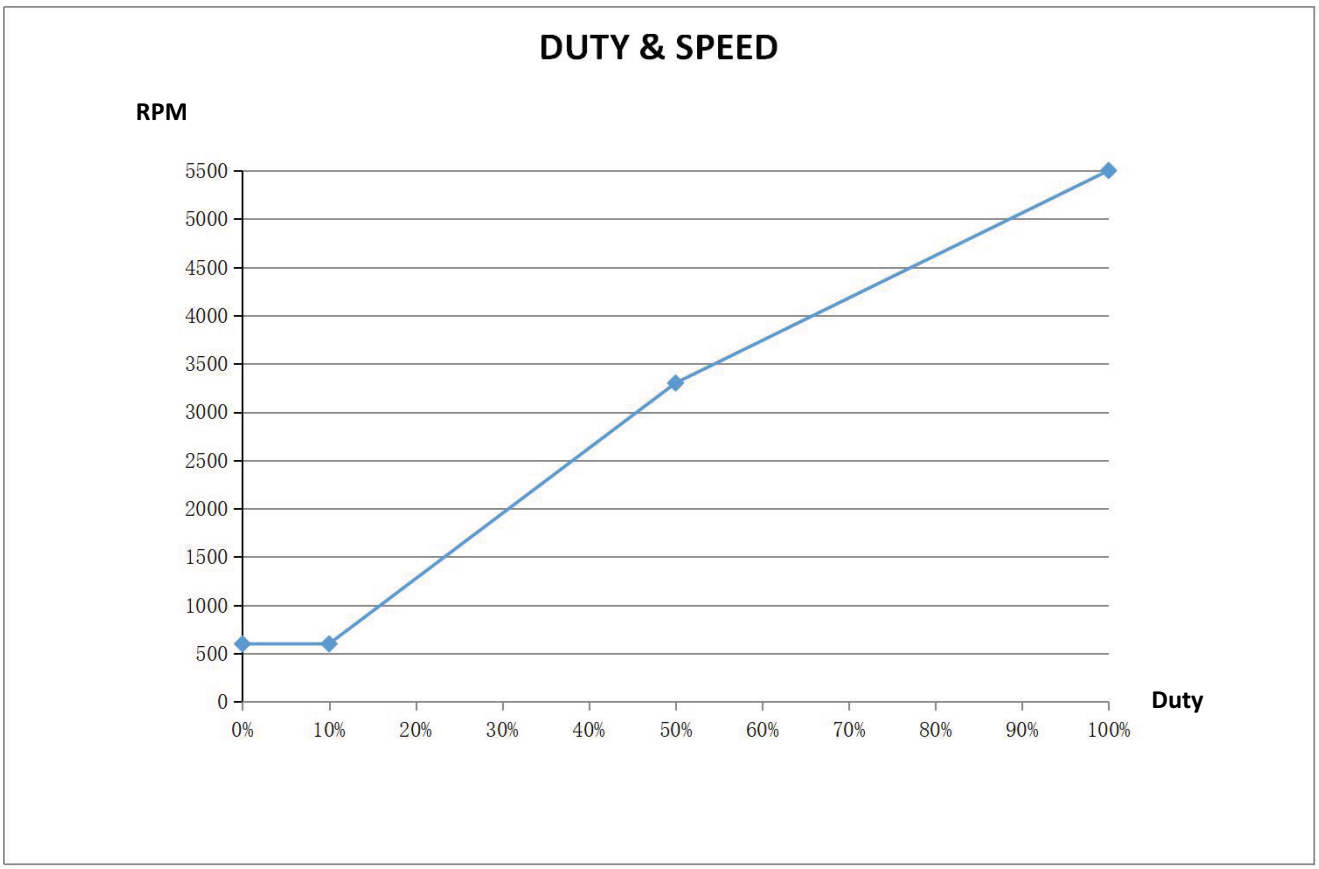

9.Revision History

REV	REVISIONS	DATE	DR.BY	CHK.D.BY
1	新版本	2017.01.12	Zhou Fei Fei	Chen Youmin
2	修正PQ曲线	2021.04.09	Duan Baojin	Xiao Xuesheng
3	按样品22120702修正额定电流由0.70A修正为0.90A,DUTY曲线 0~20%=1000RPM修正为0~10%=600RPM	2023.05.04	Duan Baojin	Yao Xiaolin

8.Descriptions

8-1. **SUNTAI** will not guarantee the performance of the products if the application condition falls outside the parameters set forth in the specification.

8-2. A written request should be submitted to **SUNTAI** prior to approval if abnormality and deviation from this specification is required.

8-3. Please exercise caution when handling fans. Damage may be caused when pressure is applied to the impeller, if the fans are handled by the lead wires, or if the fans are hard -dropped to the production floor.

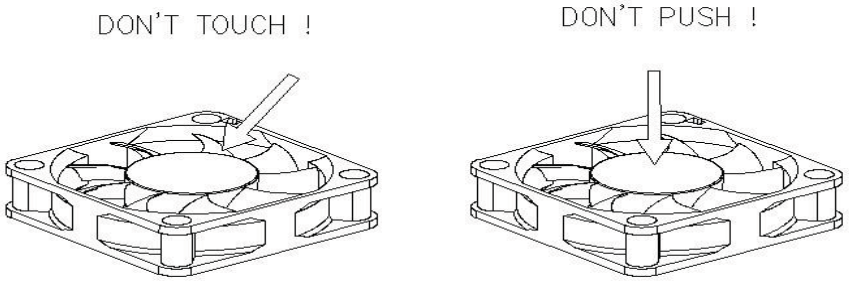

8-4. The correct polarity, Positive(+) and Negative(-), has to be clearly identified before connecting the fan to the power. Be aware of the connection with reverse polarity may lead to damage since no effective protection can be introduced against such errors.

8-5. Except as pertains to some special designs, any failure and problems regarding safety of the product caused by the insert in the hub are not guaranteed.introduction of powder, droplets of water or encroachment of insert in the hub are not guaranteed.

8-6.**SUNTAI** fans are not suitable where any corrosive fluids are introduced to their environment.

8-7. Not all fans are provided with the Lock Rotor Protection feature. If you impair the rotation of the impeller for the fans that do not have this function, the performance of those fans will lead to failure.

8-8. It is important to consider safety when testing the fans. A suitable fan guard should be fitted to the fan guard against any potential for personal injury.

8-9. Please be cautious when mounting the fan. Incorrect mounting of fans may cause excess resonance, vibration and subsequent noise.

8-10. Please ensure all fans are stored according to the storage temperature limits specified. Do not store fans in a high humidity environment. We highly recommend performance testing is conducted before shipping, if the fans have been stored over 6 months.

9.Statement on RoHS Compliance

We guarantee that all the products including the parts, packaging materials conform to the Directives of RoHS(2015/863/EU)

我们保证所有的产品包括零部件、包装材料都符合RoHS(2015/863/EU)指令。

No	Name of hazardous substance	Threshold value(ppm, mg/kg)
1	Cadmium and cadmium compounds(Cd)	100
2	lead and lead compounds(Pb)	1000
3	Mercury and mercury compounds(Hg)	1000
4	Hexavalent chromium compounds(Cr6+)	1000
5	Polychlorinated Biphenyls(PBB)	1000
6	Polybromodiphenyl ether(PBDE)	1000
7	Di-(2-ethylhexyl)phthalat (DEHP)	1000
8	Butyl-benzylphthalat (BBP)	1000
9	Di-butylphthalat (DBP)	1000
10	Diiso-butylphthalat (DIBP)	1000

Products groups that exemptions from the Restriction of Hazardous Substances (RoHS) Directive will following RoHS exceptions

属于2015/863/EU-RoHS Directive 附录及欧盟于official journal 中公告的排除项目，则依其规定

If have other requirements,A new contract will draw up in additional for discuss.

如有其他要求，另订合约义定

ONLINE CERTIFICATIONS DIRECTORY

IMPROVED CERTIFICATIONS SEARCH TOOL. REGISTER NOW! LEARN MORE

GPWV8.E343773
Fans, Electric Certified for Canada - Component

Page Bottom

Fans, Electric Certified for Canada - Component

See General Information for Fans, Electric Certified for Canada - Component

SHENZHEN YUCHUANG INDUSTRY CO LTD E343773
B DIST. DASHUITIAN INDUSTRY ZONE
NIU HU VILLAGE
GUANLAN TOWN. BAOAN
SHENZHEN, GUANGDONG 518109 CHINA

DC component fans, Models AD1225(X)12L/M/H-YYY, AD8025(X)12L/M/H-YYY, AD8025(X)24L/M/H-YYY, AD9225(X)12L/M/H-YYY and AD4010(X)05L/M/H-YYY, where (X) may be B, S, C, R; YYY may be 000 through 999, aaa through zzz, AAA through ZZZ or blank.

DC fans, Models in Series 2510(X)(Z)-YYY, 3010(X)(Z)-YYY, 4010(X)(Z)-YYY, 402H(X)(Z)-YYY, 4028(X)(Z)-YYY, 5010(X)(Z)-YYY, 5015(X)(Z)-YYY, 6015(X)(Z)-YYY, 6020(X)(Z)-YYY, 6025(X)(Z)-YYY, 7015(X)(Z)-YYY, 12038(X)(Z)-YYY, 14025(X)(Z)-YYY, 17251(X)(Z)-YYY, 7530(X)(Z)-YYY, 9733(X)(Z)-YYY, where (X) may be S, R, C, B or A; (Z) may be VL, VM or VH; YYY may be 000 through 999, aaa through zzz, AAA through ZZZ or blank.

Low voltage DC component fans, Models in Series 8015(X)(Z)-YYY, 3010(X)05(N)-YYY, 3015(X)05(N)-YYY, 6025(X)24(N)-YYY, 6038(X)(Z1)-YYY, 6038(X)24(N)-YYY, 6028(X)24(N)-YYY, 7025(X)(Z1)-YYY, 8038(X)(Z1)-YYY, 9238(X)(Z1)-YYY, AD1225(X)05(N)-YYY12038(X)24(N)-YYY, 17251(X)(Z1)-YYY, where (X) may be S, R, C, B or A; (N) may be L, M or H; (Z) may be VL, VM, VH, VU or VE; (Z1) may be VL, VM or VH; YYY may be 000 through 999, aaa through zzz, AAA through ZZZ or blank.

Low voltage component fans, Models AD1225(X)24L-YYY, AD1225(X)24M-YYY, AD1225(X)24H-YYY, 8020(X)VL-YYY, 8020(X)VM-YYY, 8020(X)VH-YYY, 3015(X)VL-YYY, 3015(X)VM-YYY, 3015(X)VH-YYY, 3015(X)VL-YYY, 3015(X)VM-YYY, 3015(X)VH-YYY, 7010(X)VL-YYY, 7010(X)VM-YYY, 7010(X)VH-YYY, 6010(X)VL-YYY, 6010(X)VM-YYY, 6010(X)VH-YYY, 8010(X)VL-YYY, 8010(X)VM-YYY, 8010(X)VH-YYY, 7020(X)VL-YYY, 7020(X)VM-YYY, 7020(X)VH-YYY, 6038(X)VL-YYY, 6038(X)VM-YYY, 6038(X)VH-YYY.

Low voltage component fans, Models AD9225(X)24L-YYY, AD9225(X)24M-YYY, AD9225(X)24H-YYY, AD8015(X)12L-YYY, AD8015(X)12M-YYY, AD8015(X)12H-YYY, 5020(X)VL-Y2Y, 5020(X)VM-Y2Y, 5020(X)VH-Y2Y, 5020(X)VL-Y1Y, 5020(X)VM-Y1Y, 5020(X)VH-Y1Y, 14025(X)VL-Y5Y, 14025(X)VM-Y5Y, 14025(X)VH-Y5Y, 4056(X)VL-Y1Y, 4056(X)VM-Y1Y, 4056(X)VH-Y1Y, 4056(X)VU-Y1Y, 4056(X)VE-Y1Y, 12032(X)VL-Y1Y, 12032(X)VM-Y1Y, 12032(X)VH-Y1Y, 6025(X)VU-Y1Y, 6025(X)VE-Y1Y, 4028(X)VU-Y1Y, 4028(X)VE-Y1Y, (where (X) may be S, R, A, B, C; Y may be any letter or number).

Marking: Company name, file number "E343773", model designation, and the Recognized Component Mark for Canada .

Last Updated on 2018-07-10

Questions? Print this page Terms of Use Page Top

© 2018 UL LLC

The appearance of a company's name or product in this database does not in itself assure that products so identified have been manufactured under UL's Follow-Up Service. Only those products bearing the UL Mark should be considered to be Certified and covered under UL's Follow-Up Service. Always look for the Mark on the product.

UL permits the reproduction of the material contained in the Online Certification Directory subject to the following conditions: 1. The Guide Information, Assemblies, Constructions, Designs, Systems, and/or Certifications (files) must be presented in their entirety and in a non-misleading manner, without any manipulation of the data (or drawings). 2. The

statement "Reprinted from the Online Certifications Directory with permission from UL" must appear adjacent to the extracted material. In addition, the reprinted material must include a copyright notice in the following format: "© 2018 UL LLC".

ZERTIFIKAT ◆ CERTIFICATE ◆ 認證證書 ◆ СЕРТИФИКАТ ◆ CERTIFICADO ◆ CERTIFICAT

Product Service

C E R T I F I C A T E

No. B 076203 0014 Rev. 01

Holder of Certificate: **ShenZhen Yuchuang Industry Co.,Ltd**
B District,Da Shui Tian Industry Zone
Niu Hu Village,GuanLan Town,BaoAn
518109 ShenZhen
PEOPLE'S REPUBLIC OF CHINA

Certification Mark:

Product: **Fans**
(DC FAN)

The product was tested on a voluntary basis and complies with the essential requirements. The certification mark shown above can be affixed on the product. It is not permitted to alter the certification mark in any way. In addition, the certification holder must not transfer the certificate to third parties. This certificate is valid until the listed date, unless it is cancelled earlier.
All applicable requirements of the testing and certification regulations of TÜV SÜD Group have to be complied. For details see: www.tuvsud.com/ps-cert

Test report no.: 64210190015102

Valid until: 2028-02-15

Date, 2023-02-16

(Richard Zhu)

TÜV SÜD Product Service GmbH • Certification Body • Ridlerstraße 65 • 80339 Munich • Germany

ZERTIFIKAT ◆ CERTIFICATE ◆ 認證證書 ◆ СЕРТИФИКАТ ◆ CERTIFICADO ◆ CERTIFICAT

Product Service

C E R T I F I C A T E

No. B 076203 0014 Rev. 01

Model(s):

4010xVL-z1z series, 4010xVM-z1z series, 4010xVH-z1z series, 402HxVL-z1z series, 402HxVM-z1z series, 402HxVH-z1z series, 6025xVL-z1z series, 6025xVM-z1z series, 6025xVH-z1z series, AD8025x12L-zzz series, AD8025x12M-zzz series, AD8025x12H-zzz series, AD1225x12L-zzz series, AD1225x12M-zzz series, AD1225x12H-zzz series, 7530xVL-z1z series, 7530xVM-z1z series, 7530xVH-z1z series, 8015xVL-z1z series, 8015xVM-z1z series, 8015xVH-z1z series, 8015xVU-z1z series, 8015xVE-z1z series, 12038xVL-z1z series, 12038xVM-z1z series, 12038xVH-z1z series, AD9225x12L-zzz series, AD9225x12M-zzz series, AD9225x12H-zzz series, 2510xVL-z5z series, 2510xVM-z5z series, 2510xVH-z5z series, 3010x05L-zzz series, 3010x05M-zzz series, 3010x05H-zzz series, 3010xVL-z1z series, 3010xVM-z1z series, 3010xVH-z1z series, 3015xVL-z5z series, 3015xVM-z5z series, 3015xVH-z5z series, 3015xVL-z1z series, 3015xVM-z1z series, 3015xVH-z1z series, 3015xVL-z2z series, 3015xVM-z2z series, 3015xVH-z2z series, AD4010x05L-zzz series, AD4010x05M-zzz series, AD4010x05H-zzz series, 4028xVL-z1z series, 4028xVM-z1z series, 4028xVH-z1z series, 4028xVU-z1z series, 4028xVE-z1z series, 5010xVL-z1z series, 5010xVM-z1z series, 5010xVH-z1z series, 5015xVL-z1z series, 5015xVM-z1z series, 5015xVH-z1z series, 6010xVL-z1z series, 6010xVM-z1z series, 6010xVH-z1z series, 6015xVL-z1z series, 6015xVM-z1z series, 6015xVH-z1z series, 6020xVL-z1z series, 6020xVM-z1z series, 6020xVH-z1z series, 6025xVL-z2z series, 6025xVM-z2z series, 6025xVH-z2z series, 6028xVL-z2z series, 6028xVM-z2z series, 6028xVH-z2z series, 6038xVL-z1z series, 6038xVM-z1z series, 6038xVH-z1z series, 6038xVL-z2z series, 6038xVM-z2z series, 6038xVH-z2z series, 6038xVL-z4z series, 6038xVM-z4z series, 6038xVH-z4z series, 7010xVL-z1z series, 7010xVM-z1z series, 7010xVH-z1z series, 7015xVL-z1z series, 7015xVM-z1z series, 7015xVH-z1z series, 7020xVL-z1z series, 7020xVM-z1z series, 7020xVH-z1z series,

TÜV SÜD Product Service GmbH • Certification Body • Ridlerstraße 65 • 80339 Munich • Germany

TÜV®

ZERTIFIKAT ◆ CERTIFICATE ◆ 認證證書 ◆ СЕРТИФИКАТ ◆ CERTIFICADO ◆ CERTIFICAT

Product Service

C E R T I F I C A T E

No. B 076203 0014 Rev. 01

7025xVL-z1z series, 7025xVM-z1z series, 7025xVH-z1z series, 8010xVL-z1z series, 8010xVM-z1z series, 8010xVH-z1z series, 8020xVL-z1z series, 8020xVM-z1z series, 8020xVH-z1z series, AD8025x24L-zzz series, AD8025x24M-zzz series, AD8025x24H-zzz series, 8038xVL-z2z series, 8038xVM-z2z series, 8038xVH-z2z series, 9238xVL-z2z series, 9238xVM-z2z series, 9238xVH-z2z series, 9733xVL-z1z series, 9733xVM-z1z series, 9733xVH-z1z series, AD1225x05L-zzz series, AD1225x05M-zzz series, AD1225x05H-zzz series, AD1225x24L-zzz series, AD1225x24M-zzz series, AD1225x24H-zzz series, 12038xVL-z2z series, 12038xVM-z2z series, 12038xVH-z2z series, 14025xVL-z1z series, 14025xVM-z1z series, 14025xVH-z1z series, 17251xVL-z2z series, 17251xVM-z2z series, 17251xVH-z2z series, 17251xVL-z4z series, 17251xVM-z4z series, 17251xVH-z4z series, AD9225x24L-zzz series, AD9225x24M-zzz series, AD9225x24H-zzz series, AD8015x12L-zzz series, AD8015x12M-zzz series, AD8015x12H-zzz series, 5020xVL-z2z series, 5020xVM-z2z series, 5020xVH-z2z series, 5020xVL-z1z series, 5020xVM-z1z series, 5020xVH-z1z series, 14025xVL-z5z series, 14025xVM-z5z series, 14025xVH-z5z series, 4056xVL-z1z series, 4056xVM-z1z series, 4056xVH-z1z series, 4056xVU-z1z series, 4056xVE-z1z series, 12032xVL-z1z series, 12032xVM-z1z series, 12032xVH-z1z series, 6025xVU-z1z series, 6025xVE-z1z series
(x= A, B, C, R, S indicates bearing type, A means AHB Bearing, B means 2 Ball Bearing, C means 1 Ball & 1 sleeve Bearing, R means Hydraulic Bearing, S means Sleeve Bearing; z=0-9, A-Z, a-y or blank indicates products code.)

TÜV SÜD Product Service GmbH • Certification Body • Ridlerstraße 65 • 80339 Munich • Germany

TÜV®

ZERTIFIKAT ◆ CERTIFICATE ◆ 認證證書 ◆ СЕРТИФИКАТ ◆ CERTIFICADO ◆ CERTIFICAT

Product Service

C E R T I F I C A T E

No. B 076203 0014 Rev. 01

Brand Name: **Becool**

Parameters:

Rated Input: See below table for details
Rated Output: See below table for details
Protection Class: III
Degree of Protection: IPX0

Tested according to: EN IEC 62368-1:2020/A11:2020

TÜV SÜD Product Service GmbH • Certification Body • Ridlerstraße 65 • 80339 Munich • Germany

ZERTIFIKAT ◆ CERTIFICATE ◆ 認證證書 ◆ СЕРТИФИКАТ ◆ CERTIFICADO ◆ CERTIFICAT

Product Service

CERTIFICATE

No. B 076203 0014 Rev. 01

Model	Voltage(V)	Current(A)
4010xVL-z1z series	12	0.13
4010xVM-z1z series	12	0.22
4010xVH-z1z series	12	0.35
402HxVL-z1z series	12	0.16
402HxVM-z1z series	12	0.25
402HxVH-z1z series	12	0.35
6025xVL-z1z series	12	0.22
6025xVM-z1z series	12	0.35
6025xVH-z1z series	12	0.55
AD8025x12L-zzz series	12	0.13
AD8025x12M-zzz series	12	0.26
AD8025x12H-zzz series	12	0.51
AD1225x12L-zzz series	12	0.17
AD1225x12M-zzz series	12	0.28
AD1225x12H-zzz series	12	0.53
7530xVL-z1z series	12	0.25
7530xVM-z1z series	12	0.40
7530xVH-z1z series	12	0.55
8015xVL-z1z series	12	0.60
8015xVM-z1z series	12	1.00
8015xVH-z1z series	12	1.30
8015xVU-z1z series	12	1.50
8015xVE-z1z series	12	2.00
12038xVL-z1z series	12	0.75
12038xVM-z1z series	12	1.55
12038xVH-z1z series	12	2.55
AD9225x12L-zzz series	12	0.21
AD9225x12M-zzz series	12	0.40
AD9225x12H-zzz series	12	0.61
2510xVL-z5z series	5	0.18
2510xVM-z5z series	5	0.25
2510xVH-z5z series	5	0.32
3010x05L-zzz series	5	0.18
3010x05M-zzz series	5	0.25
3010x05H-zzz series	5	0.32
3010xVL-z1z series	12	0.13
3010xVM-z1z series	12	0.20
3010xVH-z1z series	12	0.32

TÜV SÜD Product Service GmbH • Certification Body • Ridlerstraße 65 • 80339 Munich • Germany

TÜV®

ZERTIFIKAT ◆ CERTIFICATE ◆ 認證證書 ◆ СЕРТИФИКАТ ◆ CERTIFICADO ◆ CERTIFICAT

Product Service

CERTIFICATE

No. B 076203 0014 Rev. 01

3015xVL-z5z series	5	0.18
3015xVM-z5z series	5	0.25
3015xVH-z5z series	5	0.35
3015xVL-z1z series	12	0.08
3015xVM-z1z series	12	0.11
3015xVH-z1z series	12	0.18
3015xVL-z2z series	24	0.08
3015xVM-z2z series	24	0.11
3015xVH-z2z series	24	0.18
AD4010x05L-zzz series	5	0.20
AD4010x05M-zzz series	5	0.35
AD4010x05H-zzz series	5	0.45
4028xVL-z1z series	12	0.35
4028xVM-z1z series	12	0.50
4028xVH-z1z series	12	0.66
4028xVU-z1z series	12	1.30
4028xVE-z1z series	12	1.80
5010xVL-z1z series	12	0.16
5010xVM-z1z series	12	0.25
5010xVH-z1z series	12	0.35
5015xVL-z1z series	12	0.22
5015xVM-z1z series	12	0.32
5015xVH-z1z series	12	0.48
6010xVL-z1z series	12	0.11
6010xVM-z1z series	12	0.20
6010xVH-z1z series	12	0.45
6015xVL-z1z series	12	0.22
6015xVM-z1z series	12	0.33
6015xVH-z1z series	12	0.45
6020xVL-z1z series	12	0.17
6020xVM-z1z series	12	0.32
6020xVH-z1z series	12	0.55
6025xVL-z2z series	24	0.20
6025xVM-z2z series	24	0.30
6025xVH-z2z series	24	0.50
6028xVL-z2z series	24	0.15
6028xVM-z2z series	24	0.35
6028xVH-z2z series	24	0.45
6038xVL-z1z series	12	0.60

TÜV SÜD Product Service GmbH • Certification Body • Ridlerstraße 65 • 80339 Munich • Germany

TÜV®

ZERTIFIKAT ◆ CERTIFICATE ◆ 認證證書 ◆ СЕРТИФИКАТ ◆ CERTIFICADO ◆ CERTIFICAT

Product Service

CERTIFICATE

No. B 076203 0014 Rev. 01

6038xVM-z1z series	12	1.20
6038xVH-z1z series	12	2.50
6038xVL-z2z series	24	0.50
6038xVM-z2z series	24	1.20
6038xVH-z2z series	24	2.50
6038xVL-z4z series	48	0.25
6038xVM-z4z series	48	0.40
6038xVH-z4z series	48	0.80
7010xVL-z1z series	12	0.12
7010xVM-z1z series	12	0.28
7010xVH-z1z series	12	0.45
7015xVL-z1z series	12	0.24
7015xVM-z1z series	12	0.35
7015xVH-z1z series	12	0.55
7020xVL-z1z series	12	0.15
7020xVM-z1z series	12	0.35
7020xVH-z1z series	12	0.55
7025xVL-z1z series	12	0.25
7025xVM-z1z series	12	0.35
7025xVH-z1z series	12	0.55
8010xVL-z1z series	12	0.10
8010xVM-z1z series	12	0.14
8010xVH-z1z series	12	0.30
8020xVL-z1z series	12	0.15
8020xVM-z1z series	12	0.40
8020xVH-z1z series	12	0.50
AD8025x24L-zzz series	24	0.11
AD8025x24M-zzz series	24	0.22
AD8025x24H-zzz series	24	0.38
8038xVL-z2z series	24	0.50
8038xVM-z2z series	24	1.00
8038xVH-z2z series	24	1.80
9238xVL-z2z series	24	0.55
9238xVM-z2z series	24	1.20
9238xVH-z2z series	24	1.80
9733xVL-z1z series	12	0.25
9733xVM-z1z series	12	0.40
9733xVH-z1z series	12	0.56
AD1225x05L-zzz series	5	0.25

TÜV SÜD Product Service GmbH • Certification Body • Ridlerstraße 65 • 80339 Munich • Germany

TÜV®

ZERTIFIKAT ◆ CERTIFICATE ◆ 認證證書 ◆ СЕРТИФИКАТ ◆ CERTIFICADO ◆ CERTIFICAT

Product Service

CERTIFICATE

No. B 076203 0014 Rev. 01

AD1225x05M-zzz series	5	0.35
AD1225x05H-zzz series	5	0.55
AD1225x24L-zzz series	24	0.15
AD1225x24M-zzz series	24	0.25
AD1225x24H-zzz series	24	0.35
12038xVL-z2z series	24	0.55
12038xVM-z2z series	24	0.80
12038xVH-z2z series	24	1.80
14025xVL-z1z series	12	0.20
14025xVM-z1z series	12	0.32
14025xVH-z1z series	12	0.45
17251xVL-z2z series	24	1.00
17251xVM-z2z series	24	1.70
17251xVH-z2z series	24	2.50
17251xVL-z4z series	48	0.55
17251xVM-z4z series	48	0.85
17251xVH-z4z series	48	1.20
AD9225x24L-zzz series	24	0.15
AD9225x24M-zzz series	24	0.30
AD9225x24H-zzz series	24	0.80
AD8015x12L-zzz series	12	0.15
AD8015x12M-zzz series	12	0.32
AD8015x12H-zzz series	12	0.60
5020xVL-z2z series	24	0.15
5020xVM-z2z series	24	0.20
5020xVH-z2z series	24	0.35
5020xVL-z1z series	12	0.12
5020xVM-z1z series	12	0.26
5020xVH-z1z series	12	0.68
14025xVL-z5z series	5	0.17
14025xVM-z5z series	5	0.40
14025xVH-z5z series	5	0.75
4056xVL-z1z series	12	0.35
4056xVM-z1z series	12	0.70
4056xVH-z1z series	12	1.40
4056xVU-z1z series	12	2.00
4056xVE-z1z series	12	4.00
12032xVL-z1z series	12	0.09
12032xVM-z1z series	12	0.45

TÜV SÜD Product Service GmbH • Certification Body • Ridlerstraße 65 • 80339 Munich • Germany

TÜV®

ZERTIFIKAT ◆ CERTIFICATE ◆ 認證證書 ◆ СЕРТИФИКАТ ◆ CERTIFICADO ◆ CERTIFICAT

Product Service

C E R T I F I C A T E

No. B 076203 0014 Rev. 01

12032xVH-z1z series	12	1.90
6025xVU-z1z series	12	1.30
6025xVE-z1z series	12	2.00

TÜV SÜD Product Service GmbH • Certification Body • Ridlerstraße 65 • 80339 Munich • Germany

中國鋼鐵 CHINA STEEL

品質證明書
TEST CERTIFICATE

中國鋼鐵股份有限公司
CHINA STEEL CORPORATION
中華民國高雄市小港區中鋼路1號
1 CHUNG KANG ROAD HSIAO KANG, KAOHSIUNG 81223
TAIWAN, REPUBLIC OF CHINA
TEL: (07)802-1111 FAX: (07)802-2511, (07)801-0427
E-mail: t21mae@mail.csc.com.tw

FO160-01 COMPANY REGISTRATION NUMBER: 30414175 0285

客戶名稱 CUSTOMER	上鋼股份有限公司 SPECIAL STEEL CO., LTD.	產品名稱 PRODUCT	HDG-CAL COIL	
		發票號碼 INVOICE NO.	MB76823949	證明書編號 CERTIFICATE NO. 100505F0160
規格名稱 SPEC.	JIS G3302 SGCC, ZINC COATING MASS:Z12, MINIMIZED SPANGLE, SKIN PASSED, CHROMATE FREE ANTI-FINGER PRINT TREATED; UNOILED, ZSBX, UE.	客戶編號 CUSTOMER NO.	20971926	中鋼訂單編號 CSC ORDER NO. JA0183A
		交運日期 SHIPPING DATE	MAY. 04, 2021	證明書日期 T/C ISSUE DATE MAY. 05, 2021
檢驗 INSP.	CSC MILL INSPECTION. T/C 01	客戶訂單編號 CUST ORDER NO.		

項目 ITEM NO.	產品序號 LABEL NO.	尺寸 DIMENSIONS 厚度 THICK. mm	寬度 WIDTH mm	長度 LENGTH mm	數量 QTY	質量 MASS kg	爐號 HEAT	鋼捲編號 COIL NO.	試片編號 SAMPLE ID.	#02 彎曲試驗	#05 硬度 RB	#11 單點雙 g/m2	#12 單點上 g/m2	#13 單點下 g/m2	#14 三點雙 g/m2	化學成分 CHEMICAL COMPOSITION % C 2 X10	Mn 2 X10	P 3 X10	S 3 X10	Si	Cu	Ni	Cr	Al	備註 REMARKS
005	J121006	0.980	1219	COIL	1	11,275	AN765	563786A2	5637864	OK	56	127	63	63	130	5	19	16	6	Tr					
	J121872	"	"	"	1	10,755	AN957	56548261	5654826	OK	54	135	69	64	137	5	22	15	3	1					
006	J121888	1.160	1219	COIL	1	10,970	855939	54293821	5429382	OK	55	136	70	65	137	5	18	13	4	1					
	J121889	"	"	"	1	10,570	855939	54293822	5429382	OK	55	136	70	65	137	"	"	"	"	"					
007	J120801	1.560	1219	COIL	1	10,800	AN188	55516611	1551661	OK	56	125	61	63	126	5	17	22	6	Tr					
	J120802	"	"	"	1	11,140	AN186	55516612	1551661	OK	56	125	61	63	126	"	"	"	"	"					
			TOTAL:		6	65,410																			

註釋 NOTES

#02 彎曲試驗 BEND TEST
#05 硬度試驗 HARDNESS TEST
#11 單點雙面鍍著量 TOTAL COAT (SINGLE)
#12 上表面鍍鋅量 UPPER COAT (SINGLE)
#13 下表面鍍鋅量 LOWER COAT (SINGLE)
#14 三點雙面平均量 TOTAL COAT (TRIPLE)

Tr: TRACE ELEMENT WITH ITS CONTENT CONFORMING TO THE SPECIFICATION REQUIREMENTS.

SURVEYED BY

茲證明本表所列產品，均依材料規格製造及試驗，並符合規格之要求。
WE HEREBY CERTIFY THAT MATERIAL DESCRIBED HEREIN HAS BEEN MANUFACTURED AND TESTED WITH SATISFACTORY RESULTS IN ACCORDANCE WITH THE REQUIREMENT OF THE ABOVE MATERIAL SPECIFICATION.

Shen-Chin Hsiung
冶金技術處處長
GENERAL MANAGER, METALLURGICAL DEPARTMENT

中國鋼鐵股份有限公司
CHINA STEEL CORPORATION
中華民國高雄市小港區中鋼路1號
1 CHUNG KANG ROAD HSIAO KANG, KAOHSIUNG 81223
TAIWAN, REPUBLIC OF CHINA
TEL: (07)802-1111 FAX: (07)802-2511, (07)801-9427
E-mail: t21mae@mail.csc.com.tw

品質證明書
TEST CERTIFICATE

F0085-01 COMPANY REGISTRATION NUMBER: 30414175 0259

客戶名稱 CUSTOMER	上鋼股份有限公司 SPECIAL STEEL CO., LTD.			產品名稱 PRODUCT	CR SHEET-COIL
				發票號碼 INVOICE NO.	LG32463770
				證明書編號 CERTIFICATE NO.	120408F0085
				客戶編號 CUSTOMER NO.	20971926
				中鋼訂單編號 CSC ORDER NO.	JC1826G
規格名稱 SPEC.	JIS G3141 SPCC-SD, OILED; UNEXPOSED (CQ2, UE). RESTRICTED HRB:45 MAX. R-35			交運日期 SHIPPING DATE	APR. 07, 2023
				證明書日期 T/C ISSUE DATE	APR. 08, 2023
檢驗 INSP.	CSC MILL INSPECTION.	T/C	01	客戶訂單編號 CUST ORDER NO.	

項目 ITEM NO.	產品序號 LABEL NO.	尺寸 DIMENSIONS 厚度 THICK. mm	寬度 WIDTH mm	長度 LENGTH mm	數量 QTY	質量 MASS kg	爐號 HEAT	鋼捲號碼 COIL NO.	試片編號 SAMPLE ID.	拉伸試驗 *1 G.L. = 50 mm 降伏 Y.S. MPa, N/mm2	抗拉 T.S.	伸長 EL %	*05 硬度 RB	化學成分 CHEMICAL COMPOSITION % C 3 X10	Mn 2 X10	P 3 X10	S 3 X10	Si 2 X10	Cu	Ni	Cr	Al 3 X10	備註 REMARK
007	H674280	1.980	1219	COIL	1	10,650	6X291	58015022	5801502	163	292	52	37	2	16	19	4	1				34	
	H677288	"	"	"	1	11,185	5QP43	58025931	5802593	162	281	56	33	1	11	13	5	Tr				31	
	H677289	"	"	"	1	11,505	5QP43	58025932	5802593	162	281	56	33	"	"	"	"	"				"	
	H677290	"	"	"	1	11,455	5QP43	58025941	5802594	160	278	55	33										
			TOTAL:		4	44,795																	

*01 拉伸試驗 TENSILE TEST
*05 硬度試驗 HARDNESS TEST

1MPa = 1N/mm2
Al = TOTAL Al

註釋 NOTES

Tr: TRACE ELEMENT WITH ITS CONTENT CONFORMING TO THE SPECIFICATION REQUIREMENTS.

茲證明本表所列產品，均依材料規格製造及試驗，並符合規格之要求。
WE HEREBY CERTIFY THAT MATERIAL DESCRIBED HEREIN HAS BEEN MANUFACTURED AND TESTED WITH SATISFACTORY RESULTS IN ACCORDANCE WITH THE REQUIREMENT OF THE ABOVE MATERIAL SPECIFICATION AND THE TEST CERTIFICATE COMFORMS TO TYPE 3.1 OF TABLE A (ANNEX A) OF EN10204-2004.

SURVEYED BY

Shon-Chin Huang
冶金技術處處長
GENERAL MANAGER, METALLURGICAL DEPARTMENT

PAGE 01/01
034529877
07/20/2023 13:28

三利金屬有限公司
SAN LI METAL CO., LTD.

材質證明書
MILL CERTIFICATE

新北市三重區光復路2段141號
NO. 141, SEC. 2, GUANG FU RD., SAN CHONG DIST.,
NEW TAIPEI CITY 8, TAIWAN (R.O.C.)
TEL：(02) 2995-9192 FAX：(02) 2995-8864

Customer	富鎰機械五金企業社	Customer No.	07074
Type	SAE 1215MS	Date	Jan. 10, 2022
Product	COLD DRAWN BRIGHT STEEL ROUND BAR	Certificate No.	100812B0164

Heat No.	Size	Weight	Chemical Composition (%)							
			C	Mn	P	S	Si	Cu	Ni	Cr
			× 100		× 1000		× 100			
1WC21	4.0m/m × 2.5M	12.5 KGS	4	128	58	378	1	1	1	2

Remark：THE ABOVE COMPOSITION IS QUOTED FROM ORIGINAL MILL SHEETS.

SAN LI METAL CO., LTD.

審核：

製表：劉羽真

奕郝精密股份有限公司

YI HAO PRECISION CO., LTD.

物質安全資料表(Material Safety Data Sheet)

1. 物品與廠商資料(Identification of product and company)

物品名稱：一般雙面 PE 底雙面膠帶 Product Name：TISSUE DOUBLE SIDE TAPE WITH PE LAMI. LINER
物品代號(Product code)：DE245W
製造商或供應商名稱：奕郝精密股份有限公司 Manufacturer's Name：Yi Hao Precision Co Ltd
製造商或供應商地址：台灣南投市南崗工業區成功三路 216 號 Manufacturer's Address：No.216, Chengkung 3rd Rd., Nankang Ind Park, Nantou City , Taiwan
緊急聯絡電話/傳真電話(Emergency Tel/Fax)：886-49-2257257/886-49-2257258

2. 危害辨識資料(Hazard identification)

最重要危害效應(Most serious harm effect)	無(None)
主要症狀(Mostly symptom)：無(None)	
物品危害分類(Class name of hazardous chemicals)：無(None)	

3. 成分辨識資料(Product Component)

主要成份(Mostly Component)			
主成分中英文名 Chinese / English Name of Bases		主成分重量百分比 (WT%)	CAS No.
棉紙	TISSUE PAPER	6 ±1	—
雙 PE 淋膜離型紙	DOUBLE PE LAMI. RELEASE PAPER	53 ±4	—
壓克力感壓膠	ACRYLIC PRESSURE SENSITIVE ADHESIVE	41 ±3	103-11-7

4. 急救措施(First aid measures)

不同暴露途径之急救方法(First aid meansures at different exposed way)： 吸入過量(Excessive inhalation)：無(None) 皮膚接觸(Skin contact)：無(None) 眼睛接觸(Eye contact)：無(None) 食入(Ingestion)：吞食後應緊急催吐(After swallowing should urgently urge to spit)

5. 滅火措施(Fire fighting measures)

適用滅火方法(Suitable extinguishing media)：水或乾式滅火器(Water or dry extinguishers)
滅火時可能遭遇之特殊危害(Special hurt of extinguishing)：吸入黑色煙霧造成肺部受損 (The black smog inspiration may affect your lungs)
特殊滅火程序(Special extinguishing process)：無(None)

6. 洩漏處理方法(Giveaway disposal method)

個人應注意事項(Personal notice proceeding)：可以一般事業廢棄物處理方式處理 (Common enterprise reject processing)
環境注意事項(Measures for environmental effect)：可以一般事業廢棄物處理方式處理 (Common enterprise reject processing)
清理方法(Clear mode)：可以一般事業廢棄物處理方式處理 (Common enterprise reject processing)

7. 安全處置與儲存方法(Safety Handling and Storage)

處置(Handling)：一般存置方式(General method)
儲存(Storage)：通風良好、陰涼不受日照地區 (Out of direct sun, in well ventilated, cool and dry places)

8. 暴露預防措施(Exposure control and personal protection)

工程控制(Engineering measures)：無(None)
控制參數(Control parameter)：無(None)
個人防護設備(Personal protective equipment)： 呼吸防護(Respiratory protection)：無(None) 手部防護(Hand protection)：無(None) 眼睛防護(Eye protection)：無(None) 皮膚及身體防護(Skin and Body protection)：無(None)
衛生措施(Sanitation protection)：一般通風處(Ventilative place)

9. 物理及化學性質(Physical and Chemical Properties)

物質狀態(Matter state)：固體(Soild)	形狀(Figure)：捲狀(Roller)
顏色(Color)：白色(White)	氣味(Odor)：芳香族少許刺激味 (Fragrant and little stimulative smell)
pH 值(pH value)：—	沸點/沸點範圍(Boiling Point)：—
分解溫度(Decomposition Temperature)：—	閃火點(Flash Point)：—
自燃溫度(Autoignition temperature)：—	爆炸界限(Exposure limits)：—
蒸氣壓(Vapor pressure)：—	蒸氣密度(Vapor density)：—
密度(Specific Gravity)：—	溶解度(Solubility)：不溶(Insoluble in water)

10. 安定性及反應性(Stability and reactivity)

安定性(Stability)：安定(Stable)
特殊狀況下可能之危害反應(Under special condition possible harm effect)：無(None)
危害分解物(Hazardous decomposition material)：無(None)

11. 毒性資料(Toxicological information)

急毒性(Anxious toxicity)：無(None)
致敏感性(Sensitization perception)：無(None)
慢毒性或長期毒性(Slow toxicity or long-term toxicity)：長期吸入會危害肺部及造成困倦，應在通風處或排風良好處工作(The long-term inspiration can harm the lungs and create sleepily so working in the ventilating place)
特殊效應(Special effect)：無(None)

12. 生態資料(Zoology information)

可能之環境影響/環境流布(Possible environmental effect)：無(None)

13. 廢棄處置方法(Disposal consideration)

廢棄處置方法依現行法規(Disposal must be done in accordance with existing regulations)

14. 運送資料(Transport information)

特殊運送方法及注意事項(Special transportation method and notice)：無(None)

15. 法規資料(Regulatory information)

適用法規(Suitable law)：無特殊法規(None)

16. 其他資料(Other information)

參考文獻 (Reference)	—
製表單位 (Unit)	名稱：奕郝精密股份有限公司 (Name：Yi Hao Precision Co., Ltd.)
	地址/電話：台灣南投市南崗工業區成功三路 216 號/886-49-2257257 (Address/Tel：No.216, Chengkung 3rd Rd., Nankang Ind Park, Nantou City , Taiwan, Taiwan/886-49-2257257)
製表日期 (Date)	2015/6/29
備註 (Remark)	上述資料中符號“—”代表目前查無相關資料(There’s no correlation data In the above material the mark “—”.

奕郝精密股份有限公司 統一編號 28903937 說明書專用章

R/XS-16-213

福建三钢闽光股份有限公司质量证明书

QUALITY _CERTIFICATE OF FUJIAN PROVINCIAL SANSTEEL MINGUANG CO.,LTD

提货单位：CUSTOMER 三明市永达物资贸易有限公司　　合同号：CONTRACT_NO. 810852211171　　总重量：TOTAL_WEIGHT 4.766吨　　发货日期：DATE_OF_DELIVERY 2021年08月02日

产品名称：PRODUCT 冷镦和冷挤压用钢　　提单号：LADING_NO. F202108020031　　车号：TRAIN_NO. 1752252

规格：SPECIFICATIONS Φ 6.5 mm　　质编号：QUALITY NO. 01-01-21-0177496　　标准号：SPECIFICATION Q/SMGT006-2015

序号 NO.	批号 ROLL NO	钢种牌号 STEEL GRADE	件数 PCS	重量(吨) WEIGHT(MT)	化学成分(%) CHEMICAL COMPOSITION										抗拉强度 R_m Mpa	断后伸长率 A%	断面收缩率 Z%	冷顶锻 C.H.T	级别
					C	Si	Mn	P	S	Cr	Ni	Cu	Alt	As					
1	21460661	SWRCH18A	2	4.766	0.17	0.03	0.67	0.012	0.004	0.04	0.02	0.04	0.030	0.004	450	---	67	1/4合格	G
															---	---	---		

序号 NO.	低倍组织 Macrostructure							脱碳层DEC(mm)	晶粒度 Grain Size	金相组织 metallurgical structure	V型冲击功				
	一般疏松 General Loosen	中心疏松 Center Porosity	方形偏析 Square Segregation	中心偏析 Center Segregation	锭型偏析 Ingot Shape Segregate	一般点状偏析 Punctate Segregation	边缘点状偏析 The edge spot segregation	总脱碳层T.D			温度	IMPACTVATUE-NOTCHJ			
											TEMP.	1	2	3	AVE
1	0/0	0/0	0/0	---	---	---	---	---	---	---	---	---	---	---	---
	0/0	0/0	0/0	---	---	---	---	---							

说明 Explain

1、企业通过ISO9001、ISO14001、ISO45001质量、环境、职业安全健康管理体系认证。
Enterprises through the ISO9001, ISO14001,ISO45001quality, environment, occupation health and safety management system certification.
2、质保书无专用章无效。The quality certificate is invalid without the special stamp of quality inspection.
3、本产品参加中国人民保险公司质量责任保险。The product quality liability insurance in PICC.
4、请按标牌标明时效时间使用本产品。Please indicate the use of this product according to the sign of aging time.
5、如有质量异议，请保留实物及其相关标识，并出示质量证明书原件。
If the quality of objection, please keep the physical and related identification, and produce the quality certificate of the original.
6、“G”、“J”、“P”、“Y”分别表示高级、较高级、普通级、优级。
fill in "G", "J", "P" and "Y" to indicate advanced, higher, ordinary and superior respectively.
7、售后服务电话：质量异议：三钢技术中心：0598-8205136。计量异议：三钢质计部：0598-8205935。
Service:Quality objection:Tec.Center:+86 598 8205136. Measurement objection:QMD:+86 598 8205935
8、质保书查询请扫描二维码，或查询网址：http://www.fjsg.com.cn. Warranty check web site:http://www.fjsg.com.cn.

主管： 何天仁

制表： 叶生儿

印章：

地址：福建省三明市工业中路群工三路　　ADD:SANMING FUJIAN PROV.CHINA　　邮编:365000　　POST CODE:365000

东 莞 市 森 刚 五 金 材 料 有 限 公 司

材 质 证 明 书

客户		日期 Date	2022-02-28	编号	QX234428
钢种	304HC	品名	不锈钢线	炉号	YC198111
专案	尺寸 （mm）	数量	重量 (kg)	执行标准	
	1.85			JISG4304	

试验别	学成分（重量百分比）										机械性质			
专案	C	Si	Mn	P	S	Ni	Cr	Mo	Cu	N		抗拉强度 TS(Mpa)	屈服强度 YS(Mpa)	延伸率 （EL%）	断面收缩率 Z（%）
1	≤0.08	≤1.0	≤2.0	≤0.045	≤0.030	8.0-10.5	18-20		2.0-3.0			550-650	≥205	≥40	≥60
	0.022	0.30	0.70	0.037	0.001	8.03	18.15		2.12			584	216	49	68

兹证明本表所列产品均依材料规格制造及试验并符合规格要求。

检测：刘飞飞	审核：陈刚	制单：杨小燕

东莞市森刚五金材料有限公司

深圳市兴渝鑫金属材料有限公司产品质量证明书

2021-10-21　　质证号：2021-10-114

技术条件	YB5058-93
	GB3525-83

序号	编号	产品名称	炉号	钢号	规格	重量	件数	交货状态
1	2021-10-021	带钢	Z228-836	SK7	0.8*258	2.489	3	J-Q-T
2	2021-10-021	带钢	Z228-836	SK7	1.2*254	1.850	2	J-Q-T
3	2021-10-021	带钢	Z228-836	SK7	0.5*278	2.352	3	J-Q-T
4	2021-10-021	带钢	Z228-836	SK7	1.5*185	5.334	4	J-Q-T
5	2021-10-021	带钢	Z228-836	SK7	2.0*225	2.314	3	J-Q-T
6	2021-10-021	带钢	Z228-836	SK7	1.0*225	3.485	4	J-Q-T
7	2021-10-021	带钢	Z228-836	SK7	0.6*278	0.984	1	J-Q-T

	化学成分									机械性能							
序号	碳C	锰Mn	硫S	磷P	硅Si	铬Cr	镍Ni	铜Cu	钛Ti	抗拉强度	延伸率	洛氏硬度	扭转	脱碳层	外形	表面	球化
1	0.60	0.60	0.017	0.017	0.21	0.03	0.03	0.03		490	26-27%	170					
2	0.59	0.59	0.017	0.017	0.21	0.03	0.03	0.03		480	26-27%	175					
3	0.60	0.59	0.017	0.017	0.21	0.03	0.03	0.03		485	26-27%	175					
4	0.60	0.60	0.017	0.017	0.21	0.03	0.03	0.03		490	26-27%	170					
5	0.59	0.59	0.017	0.017	0.21	0.03	0.03	0.03		490	26-27%	170					
6	0.60	0.59	0.017	0.017	0.21	0.03	0.03	0.03		490	26-27%	170					
7	0.59	0.60	0.017	0.017	0.21	0.03	0.03	0.03		490	26-27%	175					

备注：1、化学成份根据供料厂质量证明书抄录

电话：0755-61[illegible]
传真：075[illegible]

MATERIAL SAFETY DATA SHEET

1. Product and company identification

Product name	**X-23-7762**
Company name	Shin-Etsu Chemical Co., Ltd.
Address	13-1, Isobe 2-chome, Annaka-shi, Gunma 379-0195, JAPAN
CONTACT	Quality Assurance Department (Gunma Complex)
TELEPHONE NUMBER	+81(0)27-385-2172
FAX NUMBER	+81(0)27-385-2753
Supplier	
Company name	Shin-Etsu Silicone Taiwan Co., Ltd.
Address	11F-D,No.167,Tun Hua N. Rd.,Taipei,Taiwan
CONTACT	Technical Service & Development Center
TELEPHONE NUMBER	+886-2-27150055
FAX NUMBER	+886-2-27150066
EMERGENCY	+886-3-5983111
e-mail	msds@sestw.com.tw

Recommended use and Limitations on use

Recommended use	Greases and fluid compounds Thermal interface
Limitations on use	Industrial use only.

2. Hazards identification

Hazard classification

Physical hazards	Not classified.
Health hazards	Not classified.
Environmental hazards	Not classified.

Label elements

Symbols	None.
Signal word	None.
Hazard statement	None.
Precautionary statement	None.
Other hazards	We confirmed that Zinc oxide mixed in this product dose not cause adverse effects in the aquatic environment.

3. Composition/information on ingredients

Substance or mixture Mixture

Chemical property	CAS Number	Concentration (%)
Zinc oxide	1314-13-2	20 - < 30

4. First aid measures

First aid measures for different exposure routes

Inhalation	Not applicable.
Skin contact	Wash skin with soap and water. Get medical attention if irritation develops and persists.
Eye contact	Rinse immediately with plenty of water for at least 15 minutes. Get medical attention if irritation develops and persists.
Ingestion	Rinse mouth. Get medical attention immediately.
Most important symptoms and effects	Not available.
Personal protection for first-aid responders	Not available.
Notes to physician	Treat symptomatically.

5. Fire-fighting measures

Extinguishing media Water fog. Foam. Dry chemical powder. Carbon dioxide (CO2).

Extinguishing media to avoid	None known.
Specific hazards during fire fighting	By heating and fire, harmful vapours/gases may be formed.
Special fire fighting procedures	In the event of fire, cool tanks with water spray.
Protection of fire-fighters	Firefighters must use standard protective equipment including flame retardant coat, helmet, gloves, rubber boots, and SCBA.

6. Accidental release measures

Personal precautions	Wear appropriate personal protective equipment.
Environmental precautions	Prevent further leakage or spillage if safe to do so.
Spill clean-up methods	Eliminate sources of ignition. Collect spillage. Wipe up with absorbent material (e.g. cloth, fleece). Clean surface thoroughly to remove residual contamination. Never return spills in original containers for re-use.

7. Handling and storage

Handling

Technical measures	No specific recommendations.
Local and general ventilation	Provide adequate ventilation.
Precautions	Use care in handling/storage.
Safe handling advice	No specific precautions.

Storage

Technical measures	No specific recommendations.
Suitable storage conditions	Keep container tightly closed. Store in a cool, dry place out of direct sunlight.
Incompatible materials	Refer to section 10: stability and reactivity.
Safe packaging materials	Keep in original container.

8. Exposure controls/personal protection

Exposure limits

Taiwan. OELs. (Standards on Workplace Atmosphere of Dangerous and Hazardous Materials)

Components	Type	Value	Form
Zinc oxide (1314-13-2)	TWA	5 mg/m3	Fume.

Occupational exposure limits

US. ACGIH Threshold Limit Values

Components	Type	Value	Form
Zinc oxide (1314-13-2)	STEL	10 mg/m3	Respirable fraction.
	TWA	2 mg/m3	Respirable fraction.

Engineering measures	Provide eyewash station.

Personal protective equipment

Respiratory protection	No personal respiratory protective equipment normally required.
Hand protection	Wear protective gloves.
Eye protection	Wear safety glasses with side shields (or goggles).
Skin and body protection	No special protective equipment required.
Hygiene measures	Wash hands before breaks and immediately after handling the product. Handle in accordance with good industrial hygiene and safety practices.

9. Physical and chemical properties

Appearance

Form	Paste.
Colour	Grey.
Odour	Odourless.
Odour threshold	Not available.
pH	Not available.
Melting point/freezing point	Not applicable

Boiling point, initial boiling point, and boiling range	Not applicable
Flash point	Not available.
Auto-ignition temperature	Not measured
Flammability (solid, gas)	Not available.
Flammability limit - lower (%)	No data
Flammability limit - upper (%)	No data
Explosive limit	Not available.
Vapour pressure	Negligible (25 ℃)
Vapour density	Not applicable
Evaporation rate	Negligible (Butyl Acetate=1)
Relative density	Not available.
Density	Not available.
Solubility	Not soluble
Partition coefficient (n-octanol/water)	Not available.
Decomposition temperature	Not available.
Percent volatile	2 - 3
Other data	
Specific gravity	2.4 (25 ℃)

10. Stability and reactivity

Stability	Stable at normal conditions.
Conditions to avoid	None.
Incompatible materials	Strong oxidizing agents.
Hazardous decomposition products	Thermal breakdown of this product during fire or very high heat condition may evolve the following hazardous decomposition product: Carbon oxides and traces of incompletely burned carbon compounds. Silicon dioxide. Formaldehyde.
Possibility of hazardous reactions	Hazardous polymerisation does not occur.

11. Toxicological information

Acute toxicity

Components	Test results
Zinc oxide (1314-13-2)	Acute Inhalation LC50 Mouse: > 5.7 mg/l 4 Hours Acute Oral LD50 Mouse: 7950 mg/kg Acute Oral LD50 Rat: > 5 g/kg

Routes of exposure	Not applicable.
Symptoms	Not available.
Chronic effects	Not available.

12. Ecological information

Ecotoxicological data

Components	Test results
Zinc oxide (1314-13-2)	LC50 Water flea (Daphnia magna): 0.122 mg/l 48 hours (Zinc oxide conversion)

Ecotoxicity	Very toxic to aquatic life. Very toxic to aquatic life with long lasting effects. [Zinc oxide] (We confirmed that Zinc oxide mixed in this product dose not cause adverse effects in the aquatic environment.)
Persistence and degradability	Not available.
Bioaccumulation	Not available.

Mobility in soil Not available.

Other hazardous effects Not available.

13. Disposal considerations

Local disposal regulations Incinerate. Incinerator should be appropriately equipped for silica and other fine powder which the product will generate in incineration. Workers should wear appropriate personal protective equipment(s) such as respirator. Contract with a disposal operator licensed by the Law on Disposal and Cleaning. Dispose of contents/container in accordance with local/regional/national/international regulations.

14. Transport information

International regulations

IATA

Not regulated as dangerous goods.

IMDG

Not regulated as dangerous goods.

15. Regulatory information

Applicable regulations This material safety data sheet was prepared in accordance with the Rules on Hazardous Communication of Dangerous Materials and Toxic Materials.

Hazard Communication Standard

Interpretation for GHS 1st Phase

Not regulated.

GHS 2nd Phase

Not regulated.

16. Other information

References ACGIH
EPA: AQUIRE database
NLM: Hazardous Substances Data Base
US. IARC Monographs on Occupational Exposures to Chemical Agents

Issued by

Not available.

Prepared by

Not available.

Disclaimer This information is offered in good faith as typical values and not as a product specification. No warranty, expressed or implied, is hereby made. The recommended industrial hygiene and safe handling procedures are believed to be generally applicable. However, each user should review these recommendations in the specific context of the intended use and determine whether they are appropriate.
This product has been designed, manufactured and developed solely for general industrial use only. This product is not designed for, intended for use as, or suitable for, medical, surgical or other particular purposes. Users have the sole responsibility and obligation to determine the suitability of this product for any application, to make preliminary tests, and to confirm the safety of this product for their use. Users must never use this product for the purpose of implantation into the human body and/or injection into humans.

Issue date 04-July-2012

Revision date 04-July-2012

Print date 22-August-2012