REV	DATE	DESCRIPTION	DRAFT	APPROVED
0	Sep-30-26	INITIAL RELEASE	KANE	

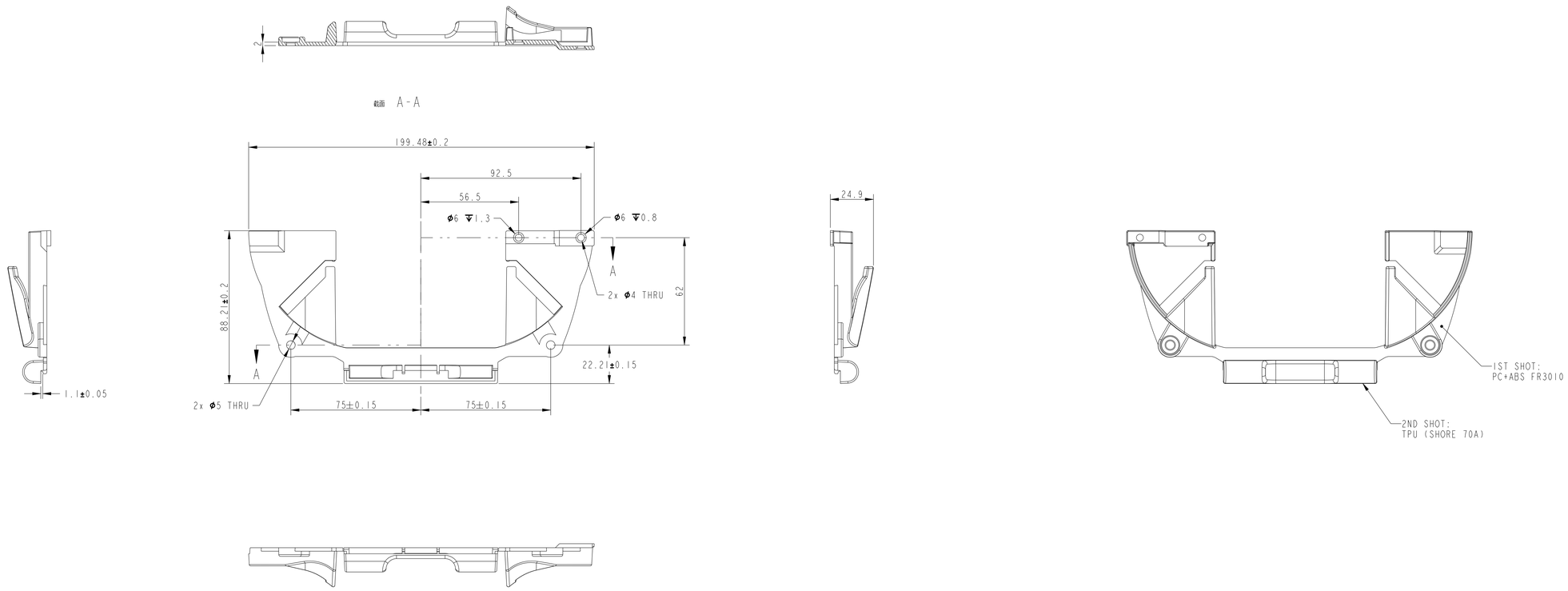

NOTE:
1. PROCESS: 2-SHOT INJECTION MOLDING.
2. MATERIAL:
   -1ST SHOT: PC+ABS (FR3010)
   -2ND SHOT: TPU (SHORE 70A)
3. RESIN COLOR:
   -1ST SHOT (PC+ABS): ARCTIC WHITE 190400.
   -2ND SHOT (TPU): ARCTIC WHITE 190400.
4. SURFACE FINISH / TEXTURE: MT-11010.
5. GENERALLY WALL THICKNESS: 2.5 mm.
6. REMOVE ALL BURRS & SHARP EDGES.
6. WARPAGE AND FLATNESS TOLERANCE : <2.0 mm.
7. NON-DIMENSIONED GEOMETRY: SEE 3D FILE.
8. PACKING : EPE FOAM BAG.
9. RoHS COMPLIANT.
10. DIVA QC INSPECTION DOCUMENT NO.: QWI-020 (Plastic)

UNLESS OTHERWISE SPECIFIED ALL DIMENSIONS ARE IN MM. TOLERANCES:
.X ± 0.5
.XX ± 0.20
.XXX ± 0.150
ANGLE ± 1.0°
INTERPRET DIM AND TOL PER ASME Y14.5-2009

THIRD ANGLE PROJECTION

MATERIAL: TPU (70A)	FINISH:	DIVA Laboratories. Ltd.		
DRAWN BY: KANE	Sep-30-26	PART NAME:		
CHECKED BY:		PART NUMBER:	MFG. PART NUMBER	
APPROVED BY:		MODEL NAME:	SIZE: A0	SCALE: 1:2 / SHEET: 1 OF 1 / REV 0
Creo FILE NAME: 6230_ZSA_CABLE_GUIDE.NZ	APPROVED NO.:	THIS DOCUMENT IS SUPPLIED IN CONFIDENCE. NO REPRODUCTION OF THIS DOCUMENT IN PART OR IN WHOLE OR THEREIN OF THE ITEMS SHOWN MAY BE MADE WITHOUT THE COPYRIGHT OWNER'S WRITTEN PERMISSION.		

ASME STANDARD.MM