承　认　书

SPECIFICATION FOR APPROVAL

客　　户：佳 士 达
CUSTOMER

品　　名：USB 3.0 BF 90° DIP
DESCRIPTION

客户料号：2B.C0104.081
BUYER P/N.

DLK 料号：U3B22D-09LM1YN26HF
DLK P/N

客户承认意见栏 CUSTOMER APPROVED BY

昆山德力康电子科技有限公司
KUNSHAN DLK ELECTRONICS TECHNOLOGY CO.,LTD
地址：昆山市淀山湖镇黄浦江南路 278 号
TEL：0512-57498666　　FAX：0512-57498555

核准		审核		制作	蒋召	日期	2020 年 08 月 05 日

目　录

Directory

1. 封面

Cover

2. 目录

Directory

3. 履历表

Resume

4. 图面

Drawings

5. 材质清单

Material list

6. UL 黄卡

UL Card

7. 规格书

Specification

8. 环境管理物质不使用证书

Environmental management material don't use certificate

COMPONENT SPEC VERSION RECORD

QISDA PART NO.	2B.C0104.081	DLK PART NO.	U3B22D-09LM1YN26HF

VER	MINUTE OF CHANGES	DLK CHECK	RELEASE DATE
A	CHECKED AND RELEASED	蒋 召	2020-08-05

符合"DLK环境管理物质技术标准"

符合USB3.0协会规范标准"

工程变更通知单 ECN(DCN) NO.	版本 REV	日期 DATE	说明 DESCRIPTION	变更 CHANGE	核准 APPRO.
————	X0	20200805	NEW RELEASE	——	——

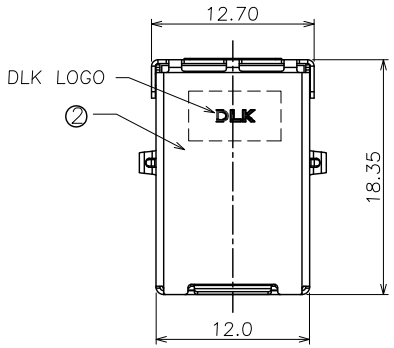

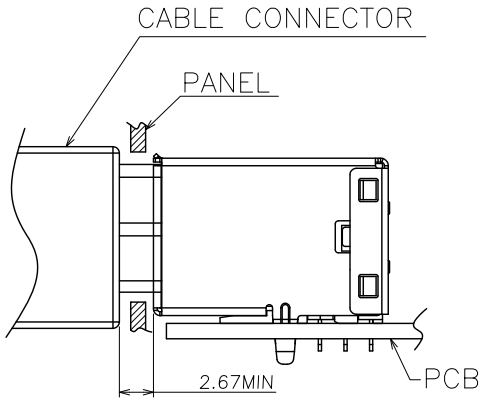

RECESSED MOUNTING CONFIGURATION

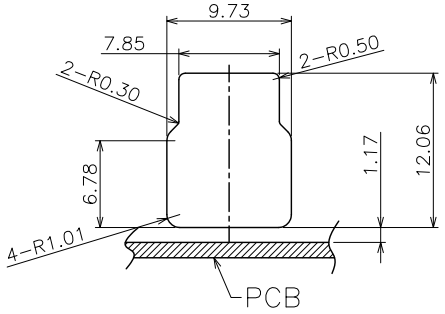

MOUNTING PANEL CUTOUT(INTERNAL SIDE)

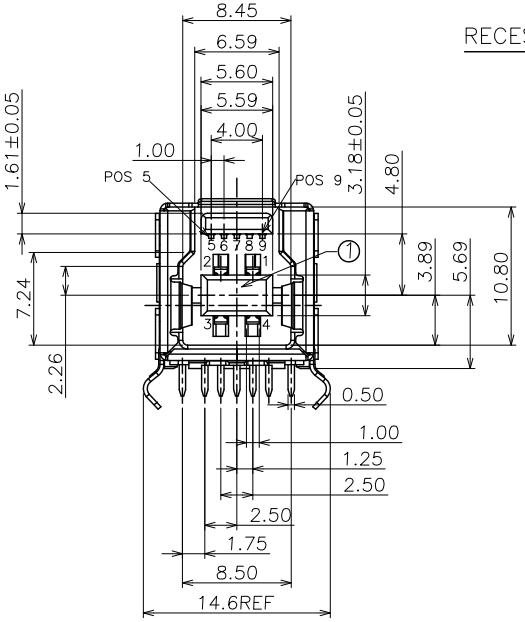

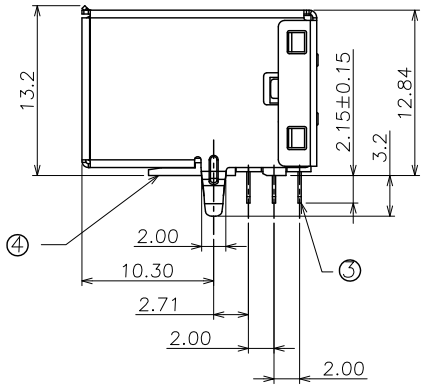

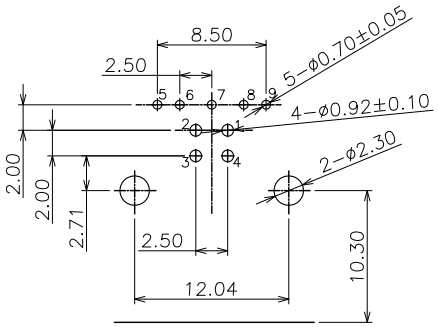

PCB LAYOUT(TOP VIEW T=1.60)

U3B22 D-09 L ** Y N2 6 HF
① ② ③ ④⑤ ⑥ ⑦ ⑧

① PRODUTION CODE（产品编码）:
U3B22: USB 3.0 BF DIP

② CHARACTER（特征）:
D:DIP TYPE

③ POSITION（位数）:
09: 9PIN

④ COLOR OF HOUSING(本体颜色）:
L:BLUE

⑤ PLATING OF CONTACT(端子电镀）:
M1 : Au 1U" AND MATTE TIN 50U" PLATED

⑥ PACKAGE(包装）:
Y :TRAY PACKAGE

⑦ PLATING OF SHELL(铁壳电镀）:
N2 :Ni plated

⑧ TYPE:
6 :弯脚 12.84H PIN长2.15mm

NO.	ITEM	Q'TY	DESCRIPTION	FINISH
4	COVER	1	PA9T	UL94V-0 BLACK 无卤
3	CONTACT	9	C2680/C5191	Au PLATED
2	SHELL	1	SPCC	Ni PLATED
1	HOUSING	1	PA9T	UL94V-0 BLUE 无卤

GENERAL TOLERANCE UNLESS OTHERWISE NOTED	
Angle	±2°
X.	±0.50
.X	±0.38
.XX	±0.30
.XXX	±0.15
A4	

德力康电子科技有限公司
DLK DELIKANG ELECTRONICS TECHNOLOGY CO.,LTD

C 名称 TITLE:	USB 3.0 BF 90° DIP			
档案名称 FILE NAME.	C-U3B22-06-HF		料号 PART NO:	U3B22D-09LM1YN26HF
DRAWING	王永辉	CHECKED		APPROVED
UNIT:	mm	SCALE	1:1	SHEET: 1 of 1